NEXA

Jimny

OWNER'S MANUAL

- Refer for vehicle usage at all times
- Contains Warranty policy and Important Information On Safety, Operation & Maintenance

Part No. 99011M80T07-74W
July, 2026
ENG.

This Owner Manual applies to the JIMNY series produced by
MARUTI SUZUKI INDIA LIMITED

JIMNY

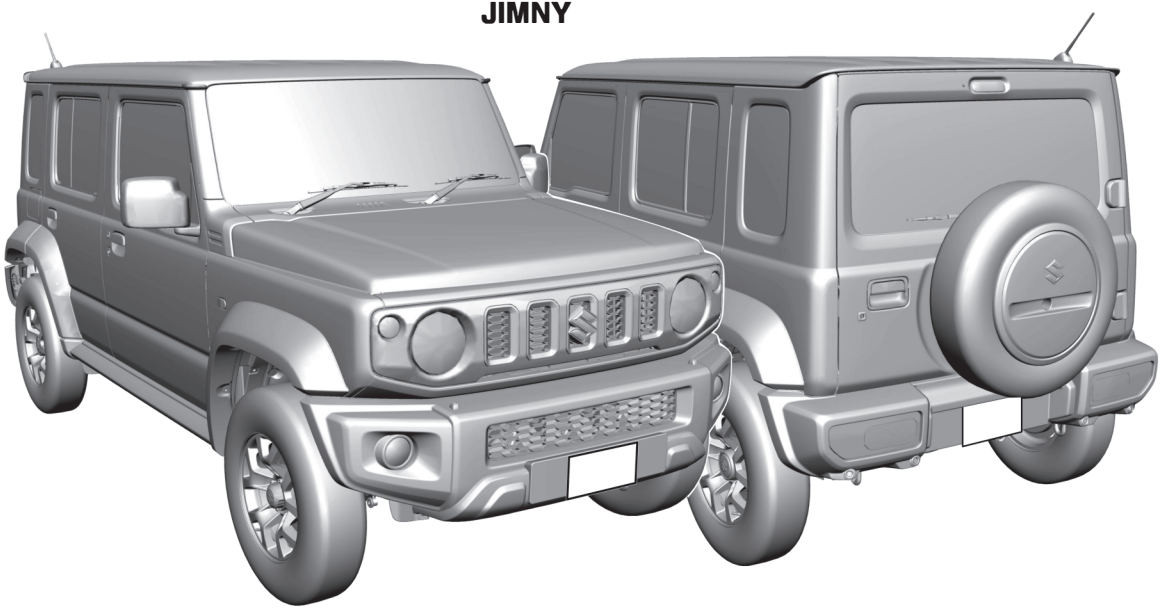

Note: The illustrated model is one of the JIMNY Series.

© Copyright 2026 Maruti Suzuki India Limited. All rights reserved.
No part of this manual can be reproduced in any manner whatsoever or transmitted
in any form or by any means without prior written consent of Maruti Suzuki India Limited.

FOREWORD

The digital Owner's Manual is an essential part of your vehicle a rich document which familiarizes you with the vehicle by providing information such as features, warnings, operations and equipment description etc. Please read this manual carefully before operating your new MARUTI SUZUKI vehicle and review the manual from time to time. It is recommended to download this manual (from the “Maruti Suzuki” mobile application with your registered mobile number) and save a soft copy of the same for easy access all times. Please visit MARUTI SUZUKI authorised workshop for availing any service.

To prolong the life of your vehicle and reduce maintenance cost, the periodic maintenance must be carried out according to “PERIODIC MAINTENANCE SCHEDULE” described in “INSPECTION AND MAINTENANCE” section of this manual. It is essential for preventing trouble and accidents to ensure your satisfaction and safety.

Daily inspection and care as per “DAILY INSPECTION CHECKLIST” described in the “OPERATING YOUR VEHICLE” section of this manual is essential for prolonging the life of the vehicle and for safe driving.

Vehicle and the available features/accessories therein should be used and plied by the owner/user in accordance with the applicable legal requirements.

MARUTI SUZUKI INDIA LIMITED believes in conservation and protection of Earth’s natural resources.

To that end, we encourage every vehicle owner to recycle, trade-in or properly dispose of, as appropriate, used Engine Oil, coolant and other fluids, batteries and tyres etc.

MARUTI SUZUKI INDIA LIMITED

All information in this manual is based on the latest product information available at the time of publication. Due to improvements or other changes, there may be discrepancies between information in this manual and your vehicle. MARUTI SUZUKI INDIA LIMITED reserves the right to make production changes at any time, without notice and without incurring any obligation to make the same or similar changes to vehicles previously built or sold.

This vehicle may not comply with standards or regulations of other countries. Before attempting to register this vehicle in any other country, check all applicable regulations and make any necessary modifications.

IMPORTANT

⚠ **WARNING/** ⚠ **CAUTION/*NOTICE*/** *NOTE*

Please read this manual and follow its instructions carefully. To emphasize special information, the symbol and the words **WARNING**, **CAUTION, *NOTICE*** and *NOTE* have special meanings. Pay particular attention to messages highlighted by these signal words:

⚠ WARNING

Indicates a potential hazard that could result in death or serious injury.

⚠ CAUTION

Indicates a potential hazard that could result in minor or moderate injury.

NOTICE

Indicates a potential hazard that could result in vehicle damage.

NOTE:
Indicates special information to make maintenance easier or instructions clearer.

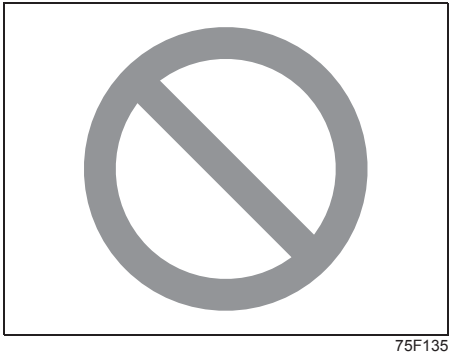

75F135

The circle with a slash in this manual means “Don’t do this” or “Don’t let this happen”.

NOTE:
- *Words like car, model/variant are invariably used in this manual to denote the “Vehicle”.*
- *Pictorial representations used in this manual are for reference purposes only.*

MODIFICATION WARNING

⚠ WARNING

Do not modify your vehicle. Modification could adversely affect safety, handling, performance, or durability and may violate governmental regulations. In addition, damage or performance problems resulting from modification shall not be covered under warranty.

NOTICE

Improper installation of mobile communication equipment such as cellular telephones, CB (Citizen’s Band) radios may cause electronic interference with your vehicle’s ignition system, resulting in vehicle performance problems. Consult your Maruti Suzuki authorised workshop or qualified service technician for advice on installing such mobile communication equipment.

NOTICE

The diagnostic connector of your vehicle is prepared only for the specific diagnostic tool for inspection and service purpose. Connecting any other tool or device may interfere with electronic parts operations and cause running out of batteries.

“WARNING”

Vehicle may break-down, meet with an accident or catch fire due to

1. Installation of
   - High wattage bulbs
   - Non genuine lamps / horns
   - Modified suspension / wheels
   - Non genuine parts / accessories etc.
2. Retrofitment of LPG / CNG fuel systems/kits.
3. Usage of domestic LPG.
4. Short circuiting due to tampering of wiring harness.

CAUTION: DO NOT STORE OR CARRY INFLAMMABLE MATERIALS IN THE VEHICLE.

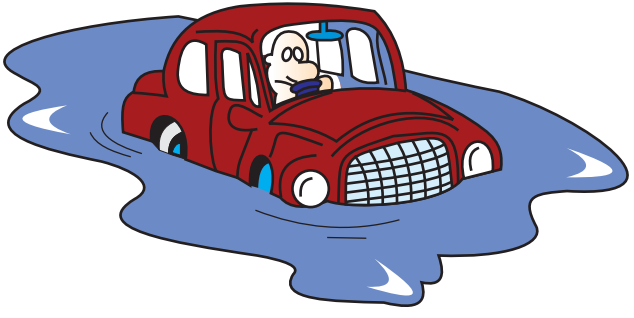

Avoid driving into or starting the vehicle in a heavily water logged area. Vehicle may break-down or engine may fail due to

1. Water entry into the engine (which may lead to hydrostatic lock).
2. Short circuiting of the electrical systems.

If the vehicle is stuck in deep water, do not start / crank the vehicle until the level of water drops below the level of exhaust pipe.

NOTE:
IF THE VEHICLE IS SUBMERGED IN WATER, REPORT TO THE NEAREST AUTHORIZED WORKSHOP.

“CAUTION”

1. Retro-fitment of LPG / CNG kit may deteriorate vehicle performance, reduce engine & engine related component’s life and also warranty will be null and void for such vehicles.
2. Do not use domestic LPG/LPG cylinder for your factory fitted LPG vehicles.
3. Usage of domestic LPG for running vehicles is prohibited as per law.
4. Do not remove company fitted LPG/CNG kit to install some other kit. It may affect vehicle performance and may cause fire.
5. Drive slowly on wet roads. Tires may slip while braking at higher speeds due to aquaplaning.(reduced contact area between tire and road due to presence of water)
6. Do not leave engine running in garages or confined areas, with passengers inside. This may result in accumulation of carbon-monoxide in cabin and may lead to suffocation or breathing problems.
7. Do not park vehicle on dry leaves or grass. This may lead to fire due to hot catalytic converter, igniting the dry leaves/grass.
8. If the vehicle is equipped with CNG/LPG, ensure availability of fire extinguisher in the vehicle all the time.
9. Always wear seat belt at all the times.
10. Do not use mobile phone while driving.
11. Avoid Smoking in the car, live bud thrown in car may cause fire.
12. Do not put any body part under the vehicle when it is supported on a Jack.
13. Do not use non-genuine accessories in your vehicle.
14. Do not fit accessories from unauthorized workshops/sources.
15. Usage of non-approved electrical accessories in your vehicle may result in spark, fire or personal injury.
16. Do not use camphor, incense sticks inside cabin room. Doing so may cause fire.
17. Avoid usage of cellular phones while refueling. Electric current and/or electronic interference from cellular phones can potentially ignite fuel vapors and cause fire.
18. Avoid entry inside vehicle immediately once after you have begun refueling. You can generate a build up of static electricity by touching, rubbing or sliding against any item or fabric capable of producing static electricity. Static electricity discharge can ignite fuel vapors and may causing a fire.
19. Do not check the engine room / open the hood near the fire area (Outside the vehicle). Fuel, washer fluid, etc. are flammable oils that may cause fire.
20. Avoid driving when vehicle has met with an accident . Before driving, Please contact with authorized MSIL dealership.

To experience and use the Digital Owner’s Manual, download Maruti Suzuki application

Maruti Suzuki application ensures a hassle free ownership experiance. Get easy access to all the services and information you need by downloading the application

GET IT ON Google Play

Available on the App Store

How to download Owners manual from Maruti Suzuki application

Step 1: Download the "Maruti Suzuki" mobile application from the Apple App Store or Google Play Store.

Step 2: Enter your registered mobile number and verify with the OTP received via SMS.

Step 3: Tap the "Offerings" icon on the bottom bar.

Step 4: Select “Owner’s Manual” to access your car’s digital manual.

Step 5: Tap on download icon at top right of the page to download the Owner's Manual.

Now, the Owner's Manual is available on your mobile phone for reference at all times.

(For assistance, contact Maruti Suzuki authorized workshop)

WARRANTY POLICY

Maruti Suzuki India Limited (hereinafter called “Maruti Suzuki”), warrants that each new Maruti Suzuki vehicle distributed in India by Maruti Suzuki and sold by a Maruti Suzuki authorized dealer will be free, under normal use and service, from any defects in material and workmanship at the time of manufacture SUBJECT TO THE FOLLOWING TERMS AND CONDITIONS:

(1) Qualification:

To qualify for this warranty the vehicle must be delivered by a Maruti Suzuki authorized dealer and set-up, and serviced by a Maruti Suzuki authorized workshop.

(2) Term:

The term of this warranty shall be Thirty-Six (36) months or 1,00,000 kilometers (whichever occurs first) from the date of invoice to the first owner, except for the following parts for which the term is as under:

NOTE:
Maruti Suzuki offers warranty for the below parts in vehicle, if equipped, as follows:

- *Lithium-ion battery, Integrated Starter Generator (ISG), Hybrid ECU, Inverter / Converter Unit, Power Management ECU- Sixty (60) months or 1,00,000 kilometers (whichever occurs first).*
- *Hybrid Electric Vehicle (HEV) Battery- Ninety six (96) months or 1,60,000 kilometers (whichever occurs first).*
- *Lead acid battery – Twenty four (24) months or 40,000 kilometers (whichever occurs first).*

(3) Maruti Suzuki Warranty Obligation:

If any defect(s) should be found in a Maruti Suzuki vehicle within the term stipulated above, Maruti Suzuki’s only obligation is to repair or replace at its sole discretion any part shown to be defective, with a new part or the equivalent at no cost to the owner for parts or labor, when Maruti Suzuki acknowledges that such a defect is attributable to faulty material or workmanship at the time of manufacture. Such defective parts, which have been replaced, will become the property of Maruti Suzuki. The owner is responsible for any repair or replacements which are not covered by this warranty. The decision of Maruti Suzuki shall be final & binding.

(4) Limitation:

This warranty shall not apply to:

(a) Normal maintenance service required other than the three free services, including without limitation, oil and fluid changes, consumables, headlight aiming, fastener retightening, wheel balancing, wheel alignment and tyre rotation, cleaning of injectors, adjustments of clutch and valve clearance.

(b) The normal wear of parts including without limitation, bulbs, tyres* and tubes, spark plugs, belts, hoses, filters, wiper blades, brushes, contact points, fuses, clutch disc, brake shoes, brake pads, cable and all rubber parts (except oil seal and glass run).
(* - If there is a complaint related to tyre, the customer may contact respective tyre manufacturer.)

(c) Any vehicle which has been used for competition, rallies or racing.

(d) Any repairs or replacement arising from accidents or collision.

(e) Any defect/ damage caused by misuse, negligence, abnormal use, insufficient care, vandalism, theft, riot, fire, flooding - not limited to entry of water in the components resulting in engine seizure, hydrostatic lock, etc. or external damages to the body/ components.
(f) Any damage resulting due to usage of adulterated fuel/ lubricants/ oil/ coolant/ fluids/ polishing products and fuel/ lubricants/ oil/ coolant/ fluids used other than those specified in the Owner's Manual.
(g) Any vehicle which has been modified or altered, including without limitation, the installation of performance accessories, enlargements of lights, other changes and external/ consequential reasons.
(h) Any vehicle on which parts or accessories not approved by Maruti Suzuki (Non-MSGA, Non-MSGP) have been used.
(i) Any vehicle which has not been operated in accordance with the operating instructions in this Owner's Manual.
(j) Any vehicle which has not received the service inspections prescribed in this Owner's Manual.
(k) Any vehicle which has been assembled, disassembled, adjusted or repaired by other than a Maruti Suzuki authorized workshop.
(l) Any vehicle which has been used for purposes other than what it was designed for.
(m) Any damage or deterioration caused by airborne fallout, industrial fallout, acid rain, hail or hail storm, wind storm, lightning, bird droppings, rodents bite / rat bite and such other thing that result in damage to the vehicle.
(n) Insignificant defects / noise which do not affect the function of the vehicle including without limitation, sound, vibration and fluid seep.
(o) Any natural wear and tear including without limitation, ageing, wear & tear or deterioration such as discoloration, fading, deformation or blurring and fabric discoloration.
(p) Installation and usage of domestic LPG gas/LPG Cylinder.
(q) V-belts, hoses and gas leaks.
(r) Any vehicle retrofitted with LPG/CNG kits.
(s) Repainting including patchwork, bodywork and mouldings and interior trims.
(t) Corrosion, rusting of body parts and/ or components.
(u) Any vehicle on which odometer has been changed unauthorizedly or odometer reading has been modified/ tampered with/ or not matching the service records.
(v) The damage(s) caused to the vehicle being unattended despite knowledge that the defect exists and ignorance by the owner/ user of the vehicle.
(w) Any damage(s) caused to vehicle including battery/ tyre due to improper maintenance or prolonged parking of the vehicle in idle condition for long duration.
(x) Any vehicle on which the retro-fitment is not authorized and/ or type approved as per the standards prescribed by the relevant authority including but not limited to Automotive Standards of India.
(y) Any vehicle on which the retro-fitment is such which directly or indirectly causes any damage to the vehicle or affects the functions of the vehicle in any manner whatsoever.

(5) Extent of Warranty:

This warranty is the entire written warranty given by Maruti Suzuki for Maruti Suzuki vehicles and no dealer or its or his agent or employee is authorized to extend or enlarge this warranty and no dealer or its or his agent or employee is authorized to make any oral warranty or representation or assurance on behalf of Maruti Suzuki.

Maruti Suzuki reserves the right to add any improvements or change the design of any model at any time with no obligation to make the same changes on units previously sold.

(6) Warranty Service:

To obtain warranty service, the complete vehicle must be presented at the owner's expenses to Maruti Suzuki authorized workshop.

The customer shall be responsible for his belongings or accessories fitted in the vehicle at the time of presenting the vehicle for service and no claim shall be entertained in any manner under any circumstances.

(7) Owner's Warranty Obligations:

NOTICE
The owner shall not use the vehicle in a damaged condition and report the same immediately to the nearest Maruti Suzuki authorized workshop. This would result in early inspection and repair of the vehicle and any possible harm to the person or aggravation of damage to the vehicle can be prevented.

It is responsibility of each owner to:

- Have performed, at his own expenses, by a Maruti Suzuki authorized workshop all the service inspections specified in the Owner's Manual described in "INSPECTION AND MAINTENANCE" section.
- Should you resell the vehicle, please guide the new users/ owners to download this manual (from the "Maruti Suzuki" mobile application with your registered mobile number). Also the soft copy of the manual must be passed on to new users/ owners when resold or otherwise transferred.

If the Owner's Manual is lost due to any reason, the owner or user may download a soft copy of the same (from the "Maruti Suzuki" mobile application with the mobile number) and save it for easy access at any point of time".

(8) Disclaimer of Consequential Damage:

Maruti Suzuki assumes no responsibility for loss of vehicle, loss of time, inconvenience or any other indirect incidental or consequential damage resulting from the vehicle not being available to the owner because of any defect covered by this warranty.

(9) Change of Owner

Even if ownership of the vehicle changes, the remaining warranty period is effective for the new owner.

This warranty is applicable only in India and not transferable to any other country.

NOTE:

Notwithstanding the warranty obligations, Maruti Suzuki may reuse reworked (refurbished) parts for undertaking rectification of recalled vehicles in terms of applicable laws.

SERVICE STATION GUIDE

1. Engine hood (see section 7)
2. Engine coolant (see section 9)
3. Windshield washer fluid/
   Headlight washer fluid (see section 9)
4. Engine oil dipstick (see section 9)
5. Lead-acid battery (see section 9)
6. Automatic transmission fluid dipstick (see section 9)
7. Fuel (see section 7)
8. Tyre pressure (see Tyre Information Label on driver's door lock pillar)
9. Tyre changing tools (see section 10)
10. Spare tyre (see section 10)

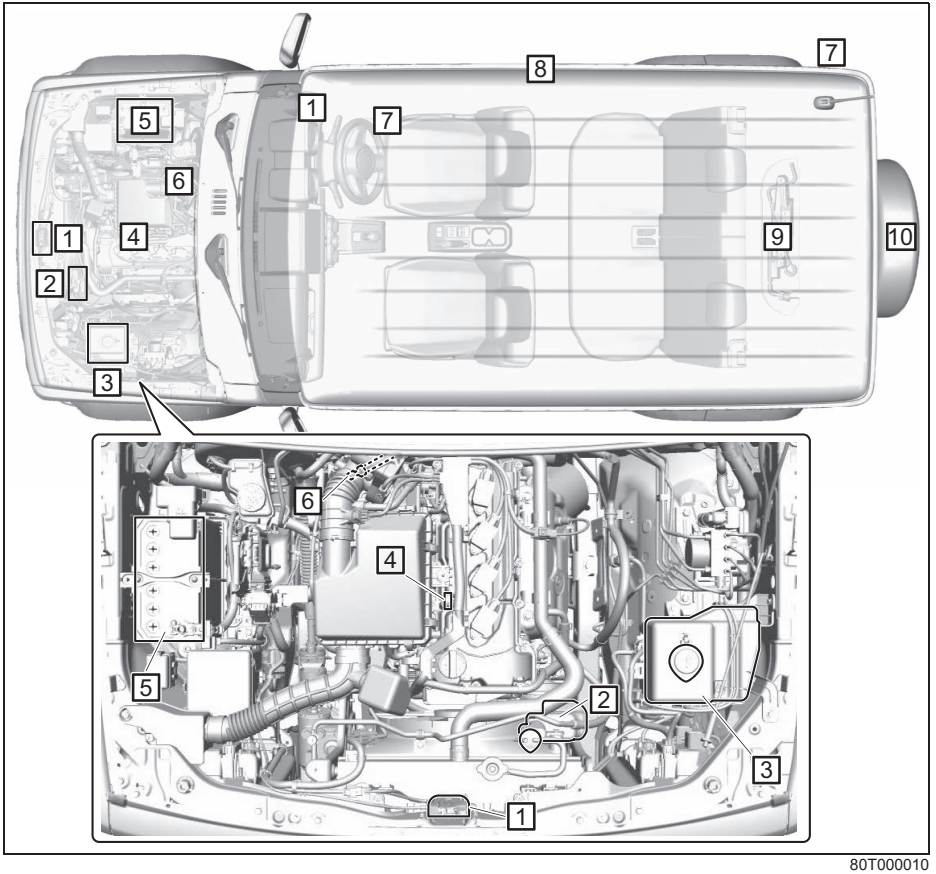

80T000010

TABLE OF CONTENTS

QUICK GUIDE	1
FOR SAFE DRIVING	2
BEFORE DRIVING	3
INSTRUMENT CLUSTER	4
OPERATING YOUR VEHICLE	5
ADVICE FOR YOUR DRIVING	6
OTHER CONTROLS AND EQUIPMENT	7
VEHICLE LOADING AND TOWING	8
INSPECTION AND MAINTENANCE	9
EMERGENCY SERVICE	10
APPEARANCE CARE	11
SPECIFICATIONS	12
SERVICE NETWORK	13

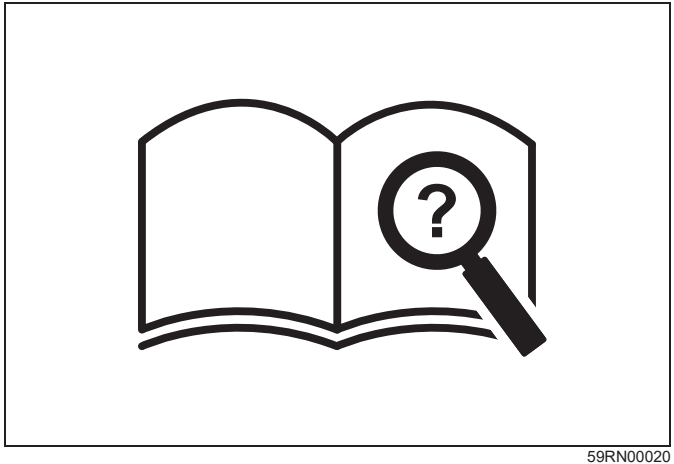

59RN00020

QUICK GUIDE

Illustrated Table of Contents **1-1**
Warning Lights and Indicators **1-9**
Warning Buzzer **1-16**
FAQ **1-24**

Illustrated Table of Contents

Exterior

(1) Fuel Filler Cap (P.7-1)
(2) Door Locks (P.3-1)
(3) Outside Rearview Mirror (P.2-9)
(4) Windshield Wiper (P.3-27, 9-42)
(5) Tailgate (P.3-4)
(6) Rear Window Wiper (P.3-29, 9-44)
(7) High-mount Stop Light (P.9-38)
(8) Radio Antenna (P.7-32)
(9) Door (P.3-1)
(10) Side turn signal light on fender (P.9-36)
(11) Front Fog Light (if equipped) (P.3-24, 9-42)
(12) Front Turn Signal Light (P.9-35)
(13) Headlight (P.9-34)
(14) Position light (P.9-35)
(15) Engine Hood (P.7-4)
(16) Tail / Brake Light (P.9-37)
(17) Rear Turn Signal Light (P.3-25, 9-37)
(18) Reversing Light (P.9-37)
(19) Parking sensor (P.5-47)
(20) License Plate Light (P.9-38)
(21) Rearview Camera (P.5-50)
(22) Spare Tyre (P.10-7)

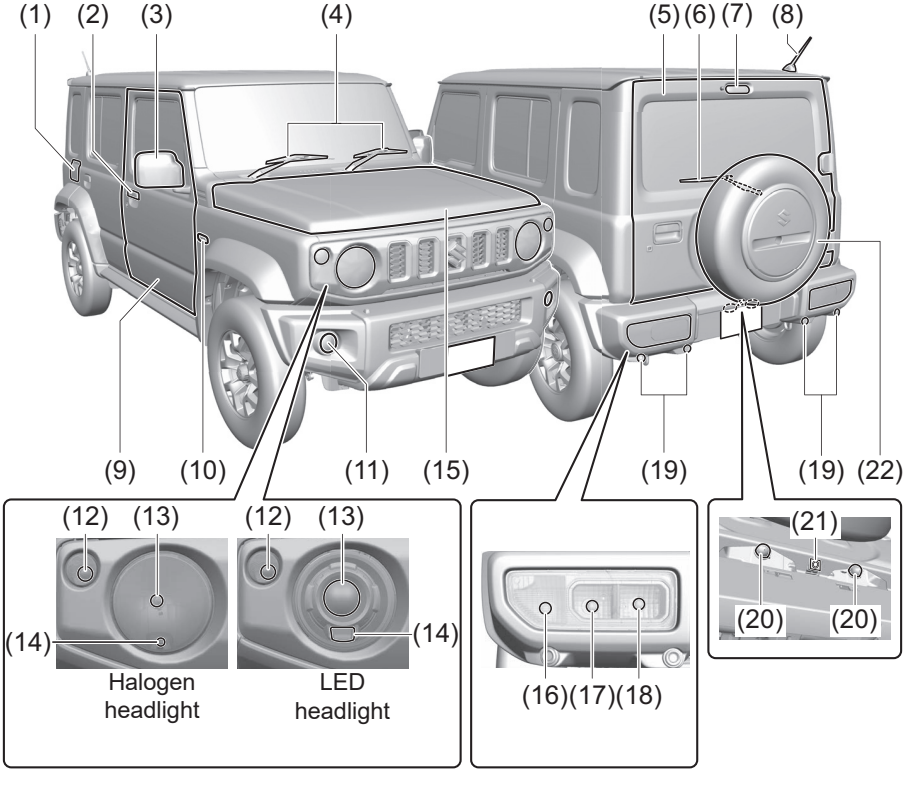

80T010030

Interior, Side

(1) Inside Rearview Mirror (P.2-8)
(2) Front Interior Light (P.7-7, 9-39)
(3) Sun Visor (P.7-6)
(4) Warning Label for Front Passenger's Front Airbag (P.2-41) *1, *2
(5) Side Curtain Airbag (P.2-42)
(6) Seat Belt (P.2-18)
(7) Center Interior Light (P.7-8, 9-39)
(8) Front Seat (P.2-5)
(9) Side Airbag (P.2-39)
(10) Front Seat Back Pocket (P.7-15)

*1: Be sure to read the detailed information in the target page before using a child restraint system.
*2: NEVER use a rearward facing child restraint on a seat protected by an ACTIVE AIRBAG in front of it, DEATH or SERIOUS INJURY to the CHILD can occur.

72M00150

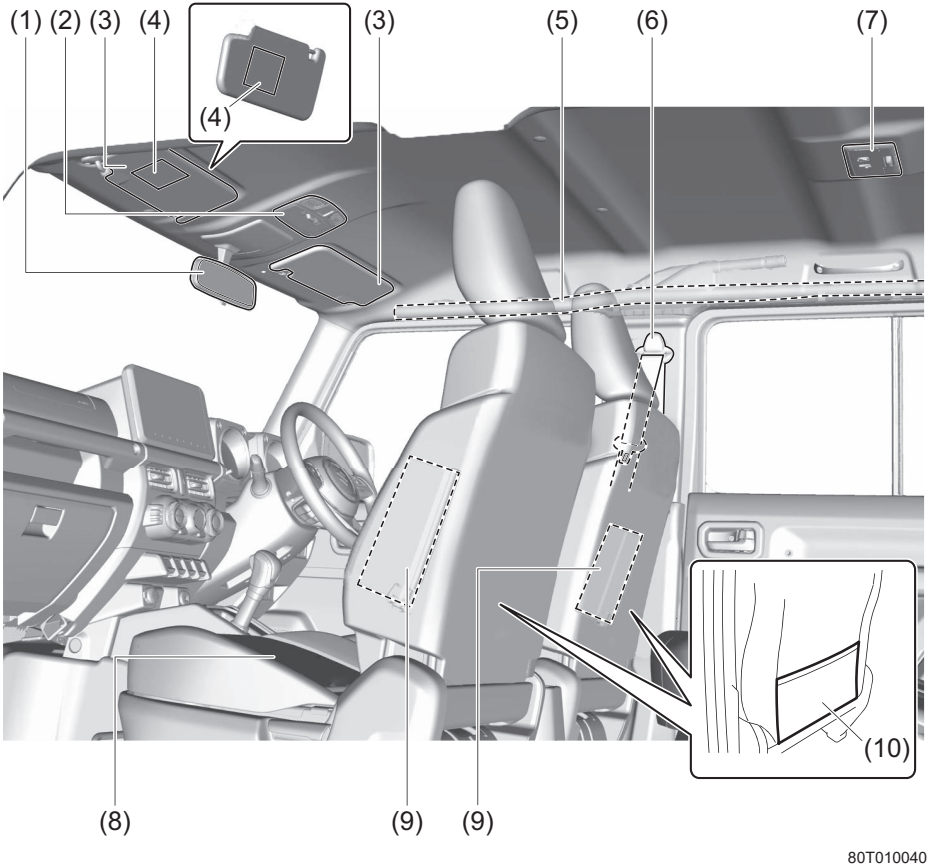

80T010040

Interior, Rear

(1) Assist Grip (P.7-13)
(2) Seat Belt (P.2-18)
(3) Accessory Socket (if equipped) (P.7-9)
(4) Luggage Compartment Light (P.7-9)
(5) Rear Seat (P.2-10)

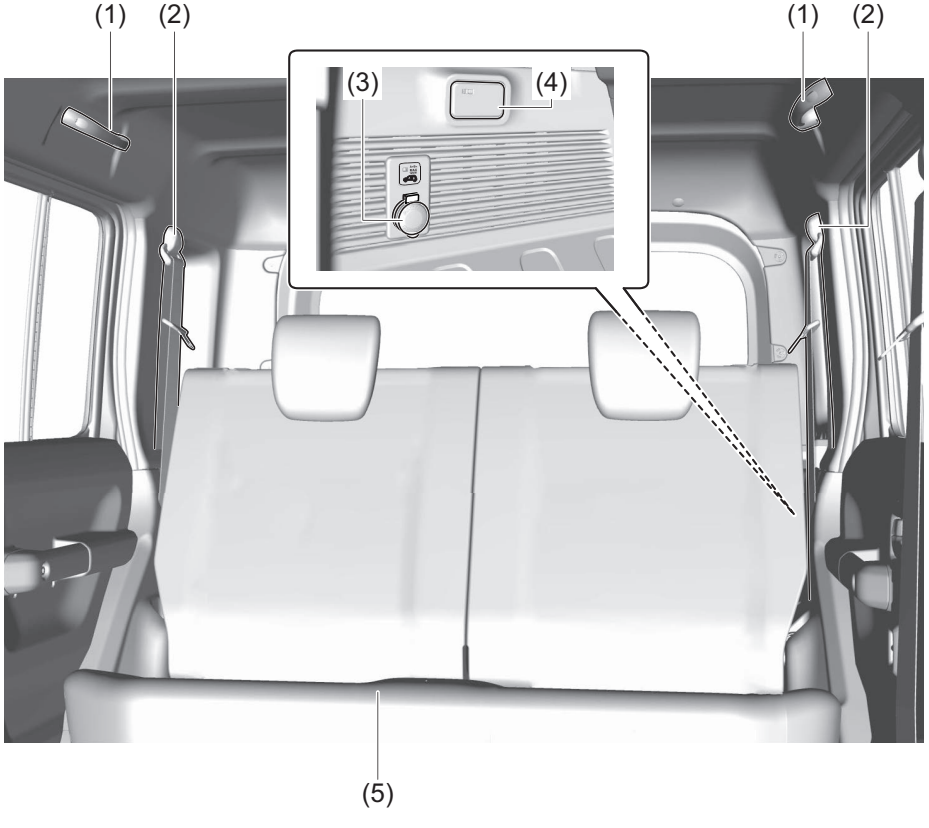

80T010070

Interior, Front

(1) Glove Box (P.7-13)
(2) Front Passenger's Front Airbag (P.2-41)
(3) USB Socket (P.7-15)
(4) Driver's Front Airbag (P.2-41)
(5) Engine Hood Release Handle (P.7-4)
(6) Manual Heating and Air Conditioning System (P.7-19)
(7) Automatic Heating and Air Conditioning System (P.7-25)
(8) Accessory Socket (P.7-9)
(9) Parking Brake Lever (P.5-29)
(10) Transfer Lever (P.5-39)
(11) Electric Window Control (Rear passenger's door) (P.3-19)
(12) Window Lock Switch (P.3-20)
(13) Fuel Lid Opener Lever (P.7-1)

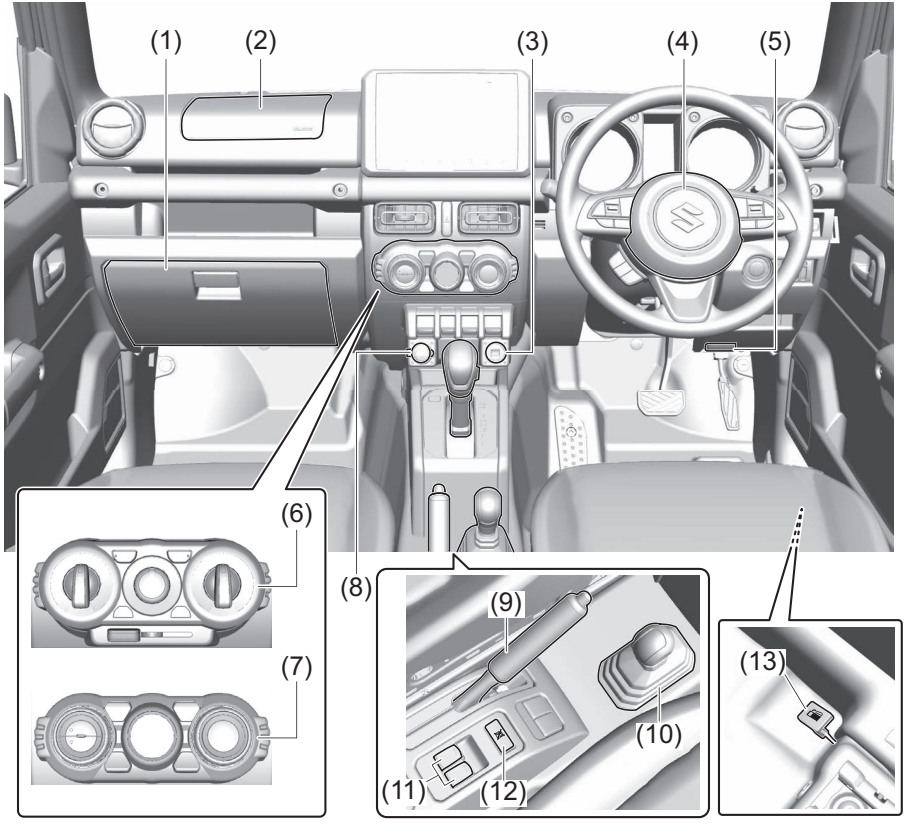

80T010090

Instrument Panel 1

(1) Heated Rear Window Switch (Automatic Heating and Air Conditioning System) (P.3-30)
(2) Heated Rear Window Switch (Manual Heating and Air Conditioning System) (P.3-30)
(3) Windshield Wiper and Washer Lever (P.3-27)/Rear Window Wiper/Washer Switch (P.3-29)
(4) Remote Audio Controls (P.7-33)
(5) Instrument Cluster (P.4-1)
(6) Cruise Control Switches (if equipped) (P.5-45)
(7) Lighting Control Lever (P.3-21)/ Turn Signal Control Lever (P.3-25)
(8) Hazard Warning Switch (P.3-26)
(9) Hands-free switch (P.7-34)
Voice recognition switch (if equipped) (P.7-34)
(10) Tilt Steering Lock Lever (P.2-7)
(11) Engine Switch (vehicle with keyless push start system) (P.5-5)
(12) Ignition Switch (vehicle without keyless push start system) (P.5-3)

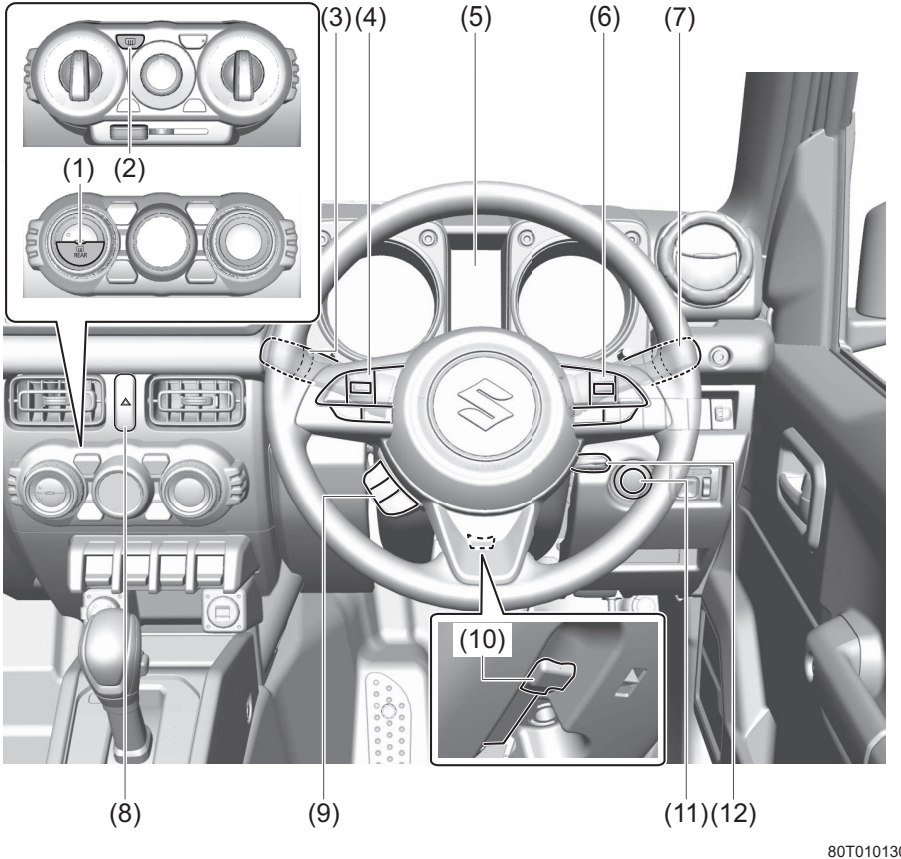

80T010130

Instrument Panel 2

(1) ENG A-STOP OFF Switch (P.5-26)
(2) Headlight Washer Switch (if equipped) (P.3-25)
(3) Headlight Leveling Switch (P.3-24)
(4) Electric Window Control (Passenger's door) (P.3-19)
(5) ESP® OFF Switch (P.5-58)
(6) Hill Descent Control Switch (P.5-59)
(7) Electric Window Control (Driver's door) (P.3-18)
(8) Electric Mirror Control (P.2-9)

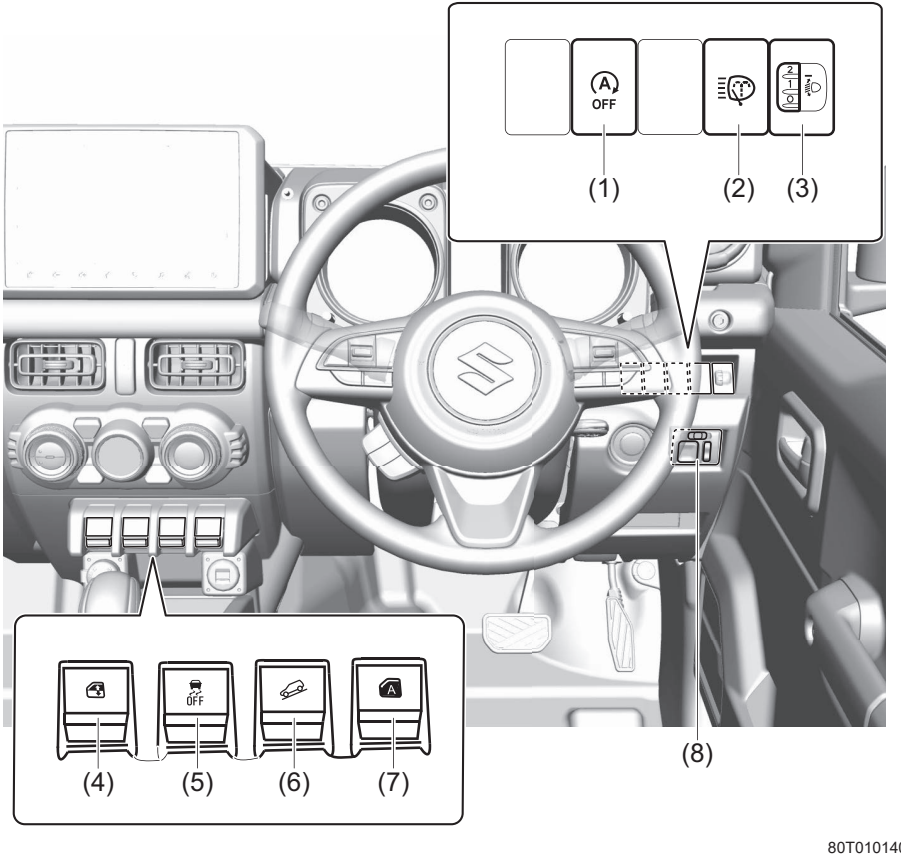

80T010140

Luggage Compartment

(1) Luggage Compartment Board
(2) Wheel Wrench (P.10-4)
(3) Jack Handle (P.10-4)
(4) Jack (P.10-4)

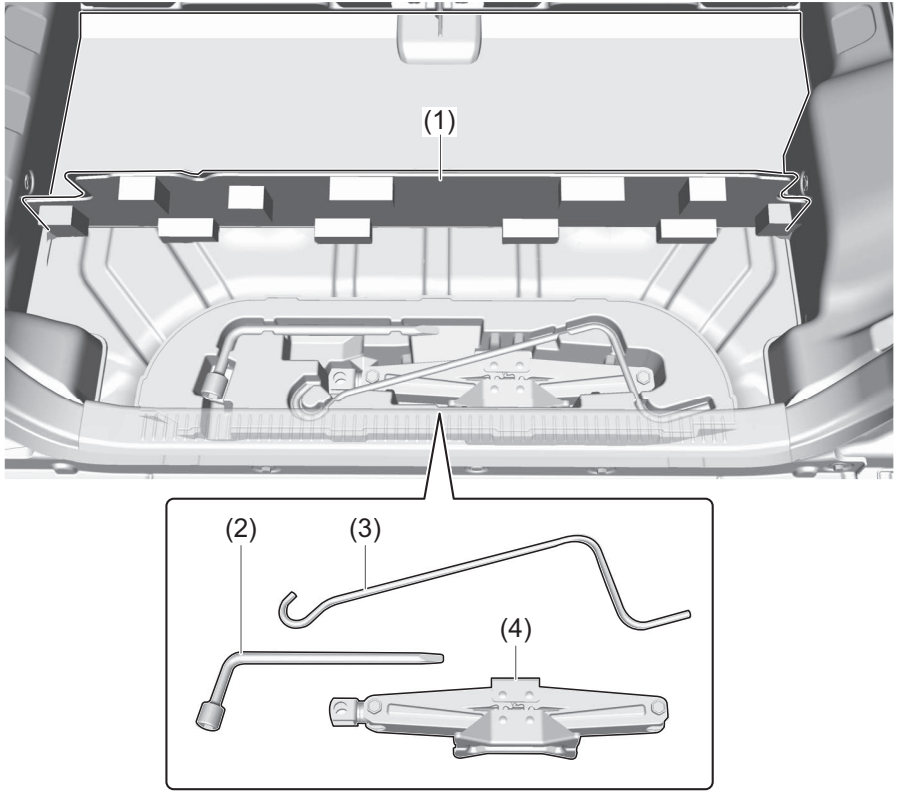

80T010170

Key

(1) Keyless Push Start System Remote Controller (P.3-10)
Keyless Push Start System (P.5-10)
Starting Engine (P.5-15)

(2) Key (P.3-1)
Door Locks (P.3-1)

(3) Keyless Entry System Transmitter (P.3-6)
Starting Engine (P.5-13)
Key (P.3-1)
Door Locks (P.3-1)

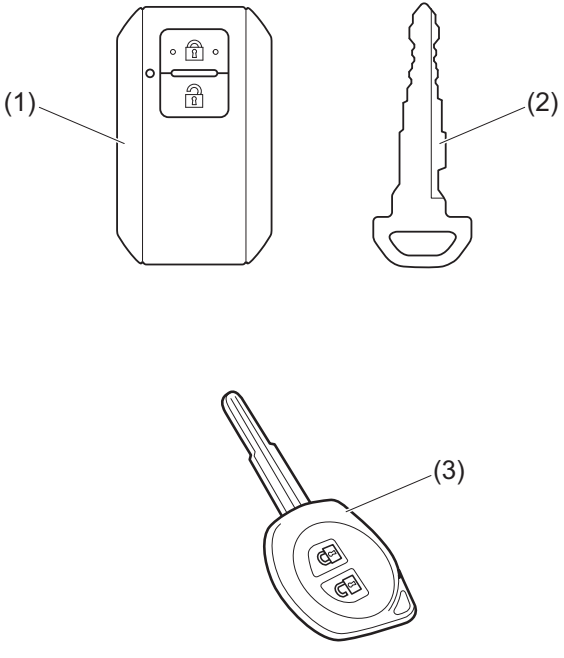

55T010010

Warning Lights and Indicators

Warning Lights

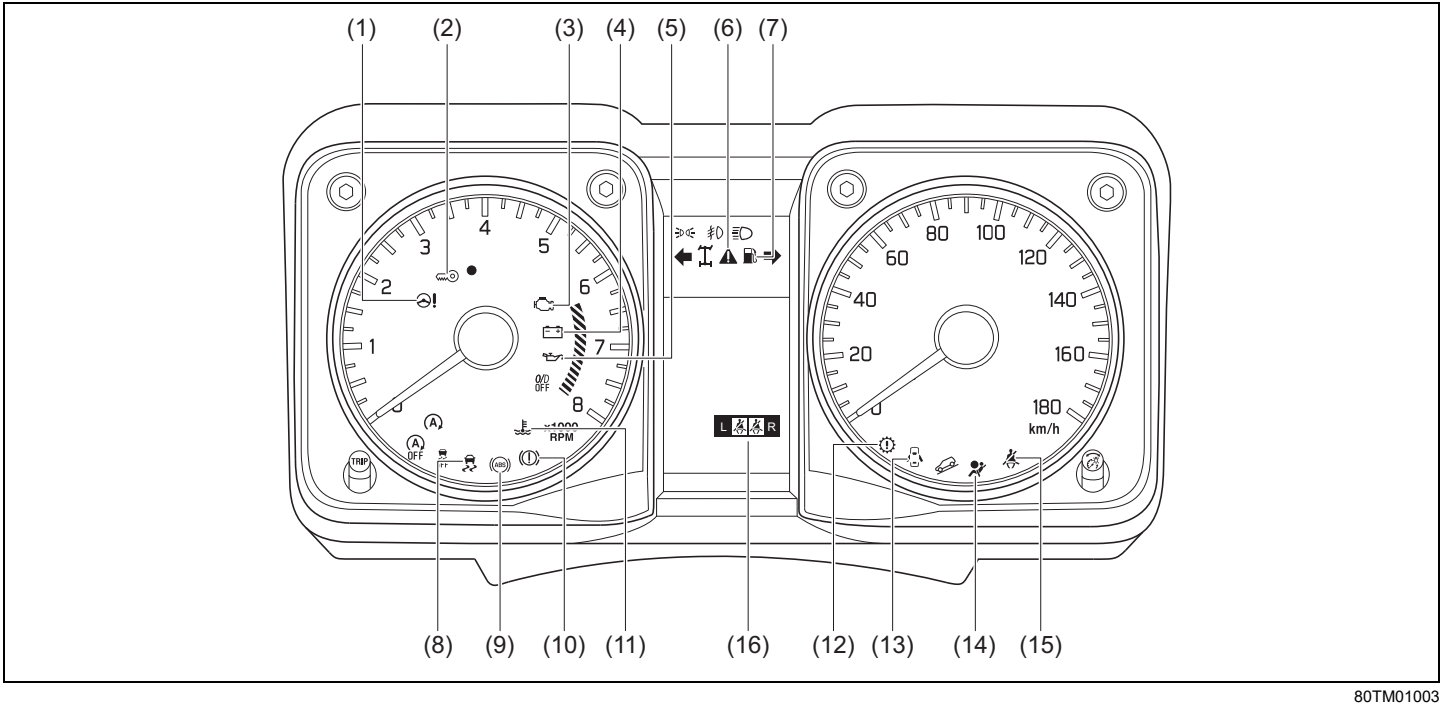

80TM01003

- If a warning light continues to be lit or is blinking, there may be a problem with the vehicle or the system. Carefully read the following reference information and consult with a Maruti Suzuki authorized workshop.
- It is considered normal that warning lights and indicators marked with an asterisk (*) are lit when turn the ignition switch to “ON” position or pressing the engine switch to change the ignition mode to ON (i.e., high engine coolant temperature warning light initially lights up in red). If such lights do not light up, consult with a Maruti Suzuki authorized workshop.
- For the ENG A-STOP system, there is the particular condition that a warning light or an indicator is lit.

Warning light			Color	Name
(1)		*	Orange	Electric Power Steering Light
(2)		*	Orange	Immobilizer System Warning Light
(3)		*	Orange	Malfunction Indicator Light
(4)	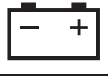	*	Red	Charge Warning Light
(5)		*	Red	Engine Oil Pressure Warning Light
(6)		*	Orange	Master Warning Indicator Light

Warning light			Color	Name
(7)			Orange	Low Fuel Warning Light
(8)		*	Orange	ESP® Warning Light
(9)		*	Orange	Anti-lock Brake System (ABS) Warning Light
(10)		*	Red	Brake System Warning Light
(11)		*	Red	High Engine Coolant Temperature Warning Light
(12)		*	Orange	Transmission Warning Light (Automatic Transmission models)
(13)			Red	Open Door Warning Light
(14)		*	Red	Airbag Warning Light

Warning light			Color	Name
(15)			Red	Driver’s Seat Belt Reminder Light / Front Passenger’s Seat Belt Reminder Light
(16)	L R		White	Rear Seat Passenger’s Seat Belt Reminder Light (Left / Right)

Indicators

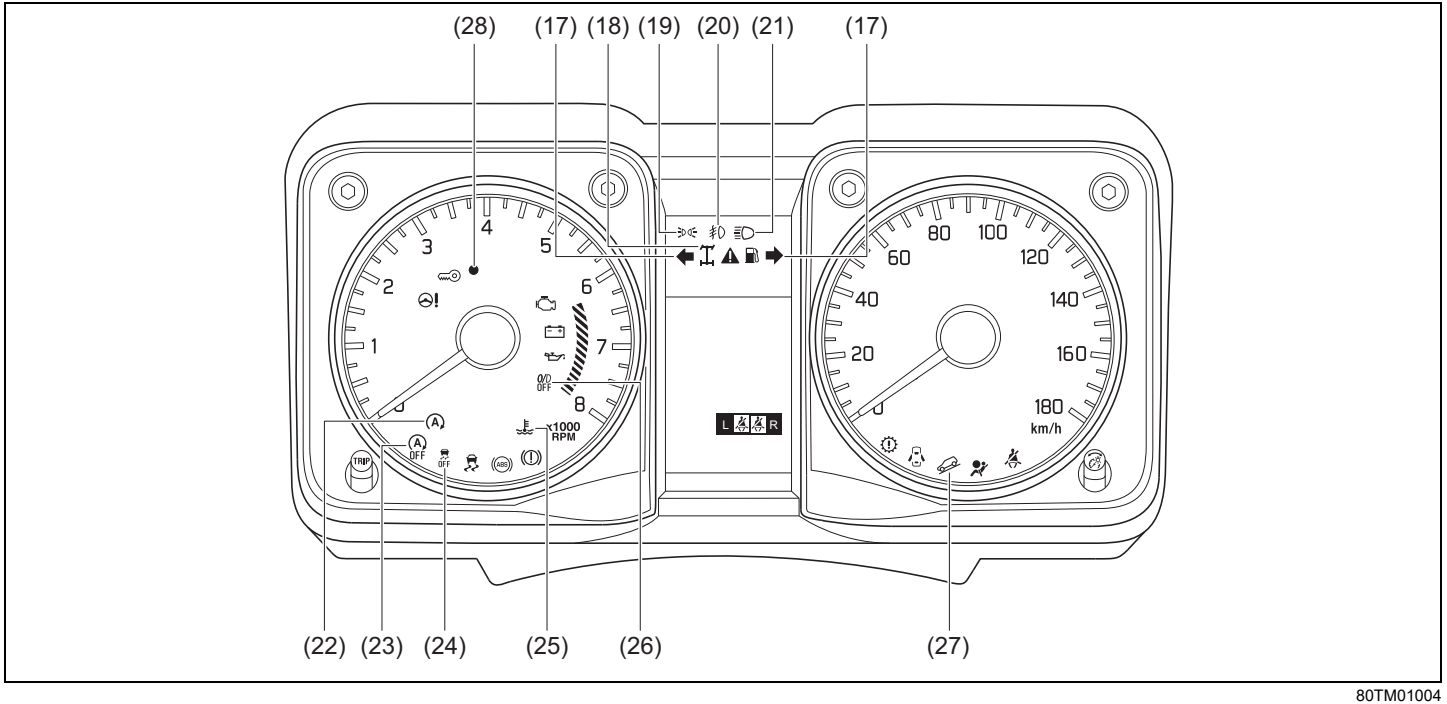

80TM01004

Indicator			Color	Name
(17)			Green	Turn Signal Indicators
(18)		*	Green	4WD Indicator Light
(19)			Green	Illumination Indicator Light
(20)			Green	Front Fog Light Indicator Light (if equipped)
(21)			Blue	Main Beam (High Beam) Indicator Light
(22)		*	Green	ENG A-STOP Indicator Light
(23)	OFF	*	Orange	ENG A-STOP OFF Indicator Light
(24)	OFF	*	Orange	ESP® OFF Indicator Light

Indicator			Color	Name
(25)			Blue	Low Engine Coolant Temperature Light
(26)	O/D OFF		White	“O/D OFF” Indicator Light (for Automatic Transmission models)
(27)		*	Green	Hill Descent Control Indicator Light
(28)	●		Red	Security System Indicator

Warning Buzzer

- *1: The master warning ⚠ in the instrument cluster blinks. At the same time, the message will be shown on the information display to inform the driver of the vehicle condition and the remedy.
- *2: The message will be shown on the information display to inform the driver of the vehicle condition and the remedy.

For All model

When	Warning buzzer	Instrument cluster	Cause and remedy
When one of the doors (including engine hood and tailgate) is opened	Interior buzzer • Beeping at short intervals for approx. 10 seconds	Blinks every 2 seconds	The security system warning is being activated. You can stop the warning by either of the following operations: • Unlock the doors using the keyless entry transmitter or keyless push start system remote controller or the request switch. • Turn the ignition switch to “ON” position or press the engine switch to change the ignition mode to ON.
When the ignition switch is in “ON” position or the engine switch is pressed to change the ignition mode to ON	Interior buzzer • Beeping 4 times	Blinks rapidly for approx. 8 seconds	Indicates that a security system has been activated while the vehicle has been parked; check the vehicle to make sure that it is not broken into or nothing is stolen.
	Interior buzzer • Chime (once)	*1	The steering wheel lock has not been released. With load not applied, turn the steering wheel to the left or right so as to turn the ignition switch or press the engine switch again.
When the ignition switch is in “ON” position or the engine switch is pressed to change the ignition mode to ON	Interior buzzer • Chime (once)	Lights up	The fuel level is low. Refuel soon.

When	Warning buzzer	Instrument cluster	Cause and remedy
When driving	Interior buzzer • Beeping at short intervals for approx. 95 seconds	Blinks *1	The driver does not wear his/her seat belt. Stop the vehicle in a safe place and wear your seat belt. The front or rear passenger(s) does not wear his/her seat belt. Wear the seat belt.
	Interior buzzer • Beeping at short intervals for approx. 35 seconds	L R Blinks *1	
	• Interior buzzer • 3 beeps repeating at short intervals	Lights up *1	The parking brake has not been released. Stop the vehicle in a safe place and release the parking brake.
When driving	Interior buzzer • Chime (once)	Lights up *1	One of the doors is not completely closed. Stop the vehicle in a safe place and close all doors completely.
When opening the driver's door	Interior buzzer • Continuous beep	Lights up *1	The headlights and/or the position lights are left on. Turn them off.

When	Warning buzzer	Instrument cluster	Cause and remedy
When stopping or backing up the vehicle	Interior buzzer • Short beeps at long intervals, short beeps at short intervals, short beeps at very short intervals, or continuous beep	–	Rear parking sensors detect an obstacle on the rear side of the vehicle. Check the surrounding area directly with your eyes and the mirrors, and back up the vehicle slowly.

For Manual Transmission models

When	Warning buzzer	Instrument cluster	Cause and remedy
When the engine is stopped automatically by the ENG A-STOP system	Interior buzzer • 2 Beeps	–	The engine stalled because the hood is opened after the engine is stopped automatically. To restart the engine, follow the procedure below. 1) Set the parking brake firmly, and then shift into “N” (Neutral). 2) Securely close the engine hood. 3) Turn the ignition switch or press the engine switch to restart the engine.
When the engine is stopped automatically by the ENG A-STOP system	Interior buzzer • 2 Beeps	–	The gearshift lever is in a position other than “N” (Neutral). Place the gearshift lever in “N” (Neutral) position.
When the engine is stopped automatically by the ENG A-STOP system	Interior buzzer • 5 beeps	and Lights up	The engine stalled because the following operations were performed. • The driver’s seat belt is unfastened. • The driver’s door is opened. Close the door and buckle the seat belt, and then turn the ignition switch or press the engine switch to restart the engine.
When the engine is stopped automatically by the ENG A-STOP system	Interior buzzer • 2 beeps	Lights up	The driver's seat belt is unfastened. You can restart the engine by depressing the clutch pedal when the seat belt is fastened.

For Automatic Transmission models

For vehicle with ENG A-STOP system

When	Warning buzzer	Instrument cluster	Cause and remedy
When the engine is stopped automatically by the ENG A-STOP system	Interior buzzer • 2 Beeps	–	The engine stalled because the hood is opened after the engine is stopped automatically. To restart the engine, follow the procedure below. 1) Set the parking brake firmly, and then place the gearshift lever in the “P” position. 2) Securely close the engine hood. 3) Press the engine switch to restart the engine.
When the engine is stopped automatically by the ENG A-STOP system	Interior buzzer • 5 beeps	or Lights up *2	The engine has restarted automatically because either of the following operations was performed. • The driver’s seat belt is unfastened. • The driver’s door is opened. Before starting the vehicle, close the door and buckle the seat belt. In addition, before getting out of the vehicle, follow the procedure below. 1) Set the parking brake firmly, and then place the gearshift lever in the “P” position. 2) When the vehicle will be stopped for a long time or when you will leave the vehicle unattended, turn the ignition switch or press the engine switch to stop the engine.

For Vehicle Without Keyless Push Start System

When	Warning buzzer	Instrument cluster	Cause and remedy
When opening the driver's door	Interior buzzer • Continuous beep	–	The ignition key is in the ignition switch. Remove the ignition key from the ignition switch.

For Vehicle With Keyless Push Start System

When	Warning buzzer	Instrument cluster	Cause and remedy
When the engine switch is pressed to change the ignition mode to LOCK (OFF)	Interior buzzer • Chime (once)	*1	You cannot change the ignition mode to LOCK (OFF) because there may be malfunction of the gearshift lever. consult with a Maruti Suzuki authorized workshop.
When the engine switch is pressed to change the ignition mode to ON	Interior buzzer • Beeping once	Blinks every 1 second *1	There may be a problem with the keyless push start system. Ask your Maruti Suzuki authorized workshop for inspection.
	Interior buzzer • Beeping twice	Lights up *1	The remote controller may be outside the vehicle or its battery may have become discharged. Bring the remote controller in the vehicle or touch the engine switch with the remote controller.

When	Warning buzzer	Instrument cluster	Cause and remedy
When the engine switch is pressed to change the ignition mode to ON or ACC	Exterior and/or interior buzzers • 5 beeps repeating at short intervals Interior buzzer • Chime (once)	Blinks *1	When the engine switch was pressed to change the ignition mode to ON or ACC, the remote controller was detected. However, when starting the engine, the remote controller was not detected. Place the remote controller in the interior workable area and then press the engine switch again.
When one of the door is opened or closed	Exterior and/or interior buzzers • 5 beeps repeating at short intervals	Blinks *1	The remote controller may be outside the vehicle. Bring the remote controller in the vehicle.
When opening the driver's door	Interior buzzer • Beeping at short intervals	–	Press the engine switch to change the ignition mode from ACC to LOCK (OFF).
	Interior buzzer • Continuous short beeps	–	The steering lock fails to engage due to a fault in the system when the ignition mode is turned to LOCK (OFF) by pressing the engine switch. Have the vehicle inspected by a Maruti Suzuki authorized workshop.

When	Warning buzzer	Instrument cluster	Cause and remedy
When pushing the request switch	Exterior buzzer • Beeping at short intervals for approx. 2 seconds	–	The engine switch is in ACC or ON mode. Press the engine switch to change the ignition mode to LOCK (OFF).
		–	The remote controller is left inside the vehicle. Take the remote controller outside the vehicle.
		Lights up *2	Any door (including the tailgate) is open. Close all doors completely
When pushing LOCK button on the remote controller	Exterior buzzer • Beeping at short intervals for approx. 2 seconds	Lights up *2	Any door (including the tailgate) is open. Close all doors completely

FAQ

Q&A

Refer to the following list of frequently asked questions.

Door opening / closing

Q. The keyless entry system does not work. What should I do?

A. There is a possibility that something is interfering with the function of the keyless entry system. Refer to “Keyless Entry System” in the “BEFORE DRIVING” section.

A. If the battery of the keyless entry system transmitter or keyless push start system remote controller is dead, replace it. Refer to “Battery Replacement” in the “BEFORE DRIVING” section.

Q. A loud alarm sounds when opening the door. What does this mean?

A. The security system has been activated. Press the engine switch to change the ignition mode to ON to stop the alarm. For the correct method of handling, refer to “Security System (if equipped)” in the “BEFORE DRIVING” section.

Window glass

Q. How can I clear fog on the inside of the windshield and door glass areas?

A. Use the defroster switch. Refer to “Manual Heating and Air Conditioning System” or “Automatic Heating and Air Conditioning System” in the “OTHER CONTROLS AND EQUIPMENT” section.

Q. How can I clear fog on the inside of the rear window glass?

A. Use the heated rear window switch. Refer to “Heated Rear Window Switch” in the “BEFORE DRIVING” section.

Tyres

Q. I get a flat tyre. What should I do?

A. Change the flat tyre with a spare tyre. Refer to “Changing Wheels” in the “EMERGENCY SERVICE” section.

Running out of battery

Q. The battery runs out and the engine does not start. What should I do?

A. Connect the battery of a vehicle for assistance to jump leads and start the engine. Refer to “Jump-starting Instructions” in the “EMERGENCY SERVICE” section.

Engine oil

Q. I would like to change the engine oil. What should I do?

A. Refer to “Engine Oil and Filter” in the “INSPECTION AND MAINTENANCE” section and “Specifications” in the “SPECIFICATIONS” section.

ENG A-STOP system

Q. The ENG A-STOP system does not work. What should I do?

A. Refer to “ENG A-STOP” in the “OPERATING YOUR VEHICLE” section.

Electrical equipment

Q. The headlights or brake lights do not light up. What should I do?

A. Check the light bulbs. Refer to “Bulb Replacement” in the “INSPECTION AND MAINTENANCE” section and “Specifications” in the “SPECIFICATIONS” section.

Q. I cannot use an electrical device. What should I do?

A. Check the fuses. Refer to “Fuses” in the “INSPECTION AND MAINTENANCE” section.

FOR SAFE DRIVING

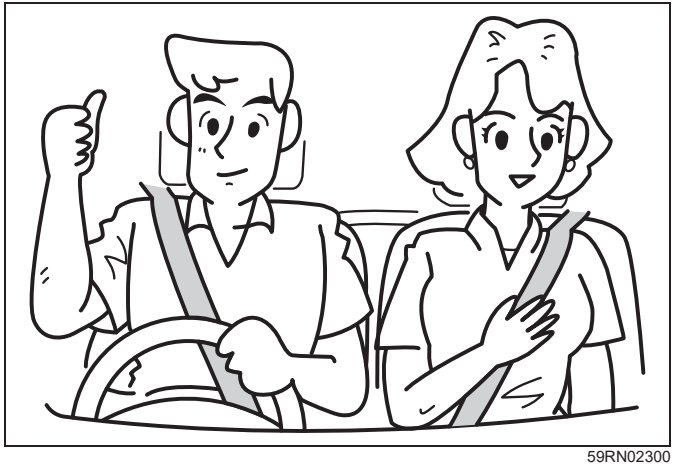

59RN02300

Driver's Seat Floor 2-1
Seat Belts and Child Restraint Systems 2-2
Front Seats 2-5
Tilt Steering Lock Lever 2-7
Mirrors 2-8
Rear Seats 2-10
Seat Utility 2-12
Safety for Child 2-14
Seat Belt 2-18
Handling and Care for Seat Belt 2-23
Seat Belt Pretensioner System (Only for Front Seat) 2-25
Seat Belt Force Limiter System (if equipped) 2-26
Child Restraint Systems 2-27
Supplemental Restraint System (Airbags) 2-37
When Driving the Vehicle with SRS Airbag System 2-39
Handling for Airbags 2-43
Function of Airbags 2-45
When Starting the Engine 2-53
When Loading the Luggage 2-54

Driver's Seat Floor

Floor Mats

Example for genuine floor mat

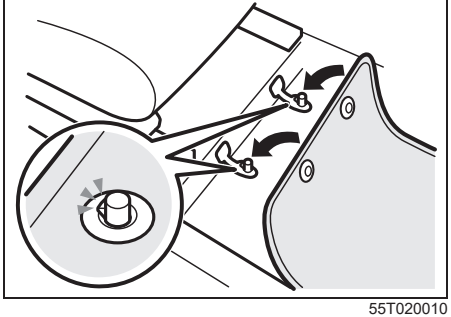

55T020010

To prevent the driver's side floor mat from sliding forward and possibly interfering with the operation of the pedals, genuine Maruti Suzuki floor mats are recommended.
Whenever you put the driver's side floor mat back in the vehicle after it has been removed, hook the floor mat grommets to the fasteners and position the floor mat properly in the footwell.

When you replace the floor mats in your vehicle with a different type such as all-weather floor mats, we highly recommend to use genuine Maruti Suzuki floor mats for proper fitting.

⚠ WARNING

Failure to take the following precautions may result in the driver's side floor mat interfering with the pedals and causing a loss of vehicle control or an accident.

- **Check that the floor mat grommets are hooked to the fasteners.**
- **Never stack floor mats.**
- **Never use a floor mat which does not fit the floor as the same may cause hindrance/damage in vehicle and its functioning.**
- **Never use damaged floor mats.**

Clearing the Floor

69RHS157

⚠ WARNING

Do not leave empty cans, etc. at your feet. These objects may interfere with pedal operation and cause accidents.

Seat Belts and Child Restraint Systems

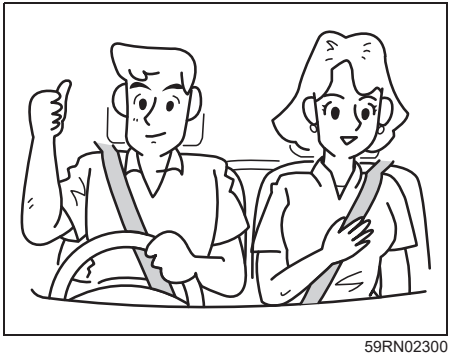

59RN02300

⚠ WARNING

- **Wear your seat belts at all times.**
- **An airbag supplements or adds to the frontal collision protection offered by seat belts. The driver and all passengers must be properly restrained by wearing seat belts at all times, even if driving for a very short distance, whether or not an airbag is mounted at their seating position, to minimize the risk of severe injury or death in the event of a collision.**

(Continued)

⚠ WARNING

(Continued)

- **Do not modify, remove, disassemble seat belts. Doing so may prevent them from functioning properly and cause the risk of severe injury or death in the event of a collision.**

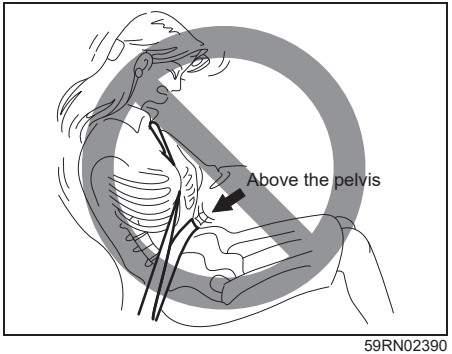

59RN02390

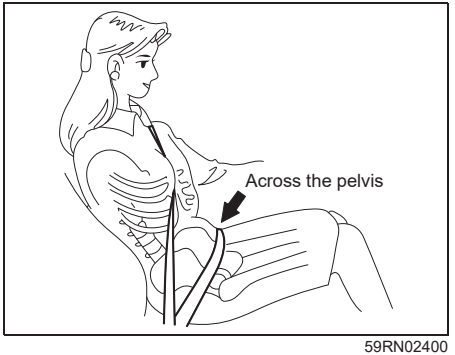

59RN02400

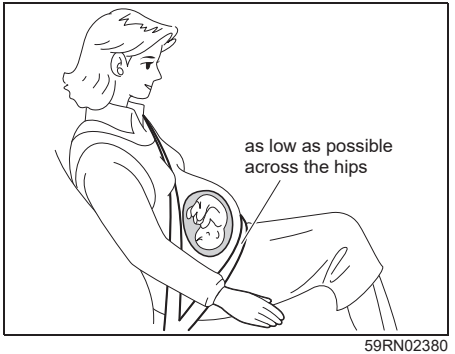

59RN02380

⚠ WARNING

- **Never allow persons to ride in the cargo area of a vehicle. In the event of an accident, there is a much greater risk of injury for persons who are not riding in a seat with their seat belt securely fastened.**
- **Ensure that all seat belts are worn correctly. An improperly worn seat belt increases the risk of injury or death if a collision occurs.**
- **Seat belts should always be adjusted as follows:**
  - **the lap portion of the belt should be worn low across the pelvis, not across the waist.**
  - **the shoulder straps should be worn on the outside shoulder only, and never under the arm.**
  - **the shoulder straps should be away from your face and neck, but not falling off your shoulder.**
- **Seat belts should never be worn with the straps twisted and should be adjusted as tightly as is comfortable to provide the protection for which they have been designed. A slack belt will provide less protection than a snug belt.**
- **Check that seat belt latch plate (tongue) is inserted into the proper buckle especially in the rear seats. It is not possible to insert into the wrong buckles in the rear seats.**

(Continued)

⚠ WARNING

(Continued)

- **Pregnant women should use seat belts, although specific recommendations about driving should be made by the woman's medical advisor. Remember that the lap portion of the belt should be worn as low as possible across the hips, as shown in the illustration.**
- **Do not wear seat belts over hard, fragile, or sharp items such as pens, keys, eyeglasses, etc in pockets or on clothing. The pressure from seat belt on such items can cause injury in case of an accident.**

59RN02440

- **Do not hold a child on a passenger's lap. Even if the passenger holds the child tightly, he/she would not be supported enough in the event of an accident and it could result in a serious injury of the child.**

(Continued)

⚠ WARNING

(Continued)

- **Never use the same seat belt for more than one occupant and never attach a seat belt over an infant or child being held on an occupant's lap. Such seat belt use could cause serious injury in the event of an accident.**
- **Periodically inspect seat belt assemblies for excessive wear and damage. Seat belts should be replaced if webbing becomes frayed, contaminated or damaged in any way. It is essential to replace the entire seat belt assembly after it has been worn in a severe impact, even if damage to the assembly is not obvious.**
- **Children aged 12 and under should ride properly restrained in the rear seat.**

(Continued)

⚠ WARNING

(Continued)

- **Infants and small children should never be transported unless they are properly restrained. Restraint systems for infants and small children can be purchased locally and should be used. Check that the system you purchase meets applicable safety standards. Read and follow all the directions provided by the manufacturer.**
- **For child, if the seat belt irritates the neck or face, use a child restraint system appropriately for the child. The seat belts of your vehicle are principally designed for persons of adult size.**
- **Avoid contamination of seat belt webbing by polishes, oils, chemicals, and particularly battery acid. Cleaning may safely be carried out using mild soap and water.**
- **Do not insert any items such as coins and clips into the seat belt buckles, and be careful not to spill liquids into these parts. If foreign materials get into a seat belt buckle, the seat belt may not work properly.**
- **All seatbacks should always be in an upright position when driving, or seat belt effectiveness may be reduced. Seat belts are designed to offer maximum protection when seatbacks are in the upright position.**

Adjustment before Driving

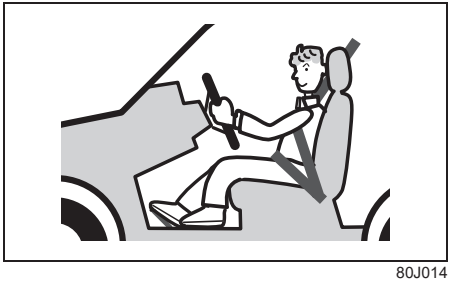

80J014

⚠ WARNING

- **When driving, do not adjust the steering wheel (only adjustable type with certain specifications), the seat, the inside rearview mirror or the outside rearview mirrors. Otherwise, there is the risk of mistaken operation of the steering wheel or reduced awareness of what is in front of you, possibly leading to an accident.**
- **Do not tilt the seatback further back than necessary. Otherwise, the head restraint and the seat belt cannot function as intended.**

Correct Use of Seat Belt

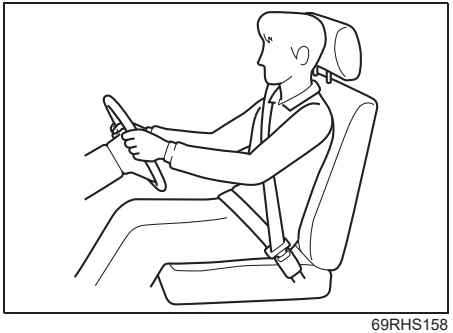

69RHS158

- Adjust the seat to the correct position. Sit your body fully into the seat.
- Make sure that the seat belt is not twisted.
- Make sure that you place the lap portion of the belt as low as possible across the pelvis.
- The upper belt should rest on the area midway between the shoulder and the base of the neck.
- Confirm that the belt is not twisted in any way, and remove any slack.

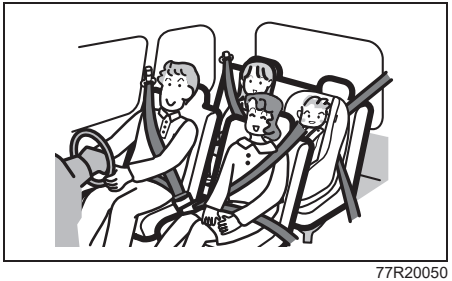

77R20050

⚠ WARNING

- **If you do not fasten your seat belt properly, your body may not be restrained in a sudden braking and a collision. This may cause severe injury.**
  Fasten your seat belt properly before driving.
- **If all the passengers do not fasten their seat belts properly, their body may not be restrained in a sudden braking and a collision. This may cause severe injury.**
  Ask all the passengers on the front passenger's seat and the rear seats to fasten their seat belts properly before driving.

Front Seats

Seat Adjustment

⚠ WARNING

- **Never attempt to adjust the driver's seat or seatback while driving. The seat or seatback could move unexpectedly, causing loss of control. Check that the driver's seat and seatback are properly adjusted before you start driving.**
- **To avoid excessive seat belt slack, which reduces the effectiveness of the seat belts as a safety device, check that the seats are adjusted before the seat belts are fastened.**
- **All seatbacks should always be in an upright position when driving, or seat belt effectiveness may be reduced. Seat belts are designed to offer maximum protection when seatbacks are in the upright position.**

(Continued)

⚠ WARNING

(Continued)

- **If you place a cushion, etc. between the seatback and your back, you may not be able to drive the vehicle in a correct posture. Also, the seat belt and the head restraint may not provide the best performance. This may cause severe injury in an accident.**
  Do not place a cushion, etc. between the seatback and your back.
- **Do not place any object under the front seat. If an object gets stuck under the front seat, the seat shall not be latched properly and may cause injury.**
- **Do not leave cigarette lighters or spray cans on the floor. If a cigarette lighter or spray can is on the floor, it may light accidentally when luggage is loaded or the seat is adjusted, causing a fire.**

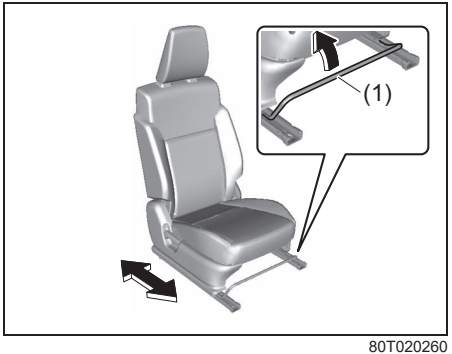

80T020260

Seat position adjustment lever (1)
Pull the lever up and slide the seat.

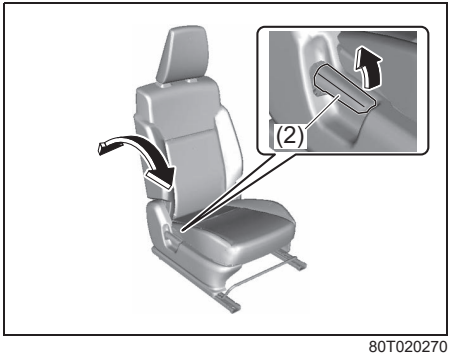

80T020270

Seatback angle adjustment lever (2)
Pull the lever up and move the seatback.

NOTE:
To operate the seat back smoothly, pull the seat back adjustment lever (2) in upward direction. Ensure to move seat back only after lever is moved to fully up position. After adjustment of seat back, release the lever gently. Check that seat back is locked by moving it forward and backward.

Head Restraints

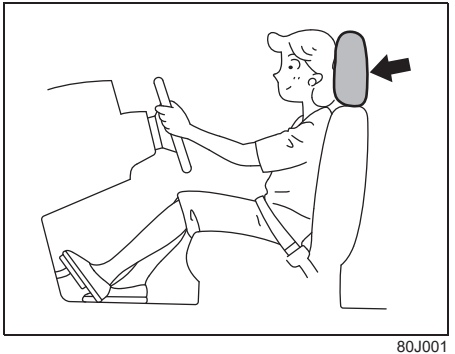

80J001

Head restraints are designed to help reduce the risk of neck injuries in the case of an accident. Adjust the head restraint to the position which places the center of the head restraint closest to the top of your ears. If this is not possible for very tall passengers, adjust the head restraint as high as possible.

⚠ WARNING

- **If you drive the vehicle with the head restraint removed, a passenger's backward tilting cannot be prevented in a collision from the backward and the impact to a passenger's head cannot be reduced in a sudden braking or a collision. This may cause severe injury.**
  Never drive the vehicle with the head restraints removed.
- **If the head restraint is installed back to front or it is not installed securely, the head restraint may not provide the best performance in case of emergency, resulting in severe injury.**
  If the head restraint is installed back to front, you cannot adjust the height and install it securely.
  Make sure to install the head restraint securely in the right direction.
- **Being distracted by head restraint adjustment could lead to an accident.**
  Do not attempt to adjust the head restraint while driving.

NOTE:
It may be necessary to recline the seatback to provide enough overhead clearance to remove the head restraint.

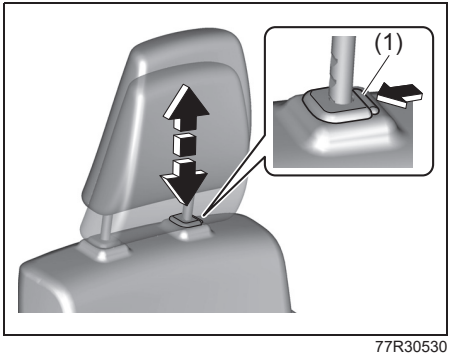

77R30530

To raise the front head restraint, pull upward the head restraint until it clicks. To lower the head restraint, push down the head restraint while holding in the lock button (1). If a head restraint must be removed (for cleaning, replacement, etc.), push in the lock button (1) and pull the head restraint all the way out.

Tilt Steering Lock Lever

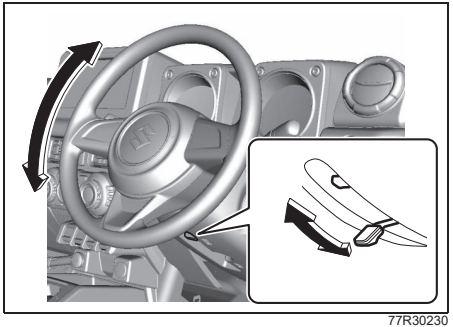

77R30230

(1) LOCK
(2) UNLOCK

The lock lever is located under the steering column. To adjust the steering wheel height:

1) Push down the lock lever to unlock the steering column.
2) Adjust the steering wheel to the desired height and lock the steering column by pulling up the lock lever.
3) Try moving the steering wheel up and down back and forth to check that it is securely locked in position.

⚠ WARNING

Never attempt to adjust the steering wheel while the vehicle is moving or you could lose control of the vehicle.

Mirrors

⚠ WARNING

Failure to observe following point may result in loss of vehicle control and cause an accident, leading to death or serious injury. Always follow below points while driving.

- **Always unfold all the outside rearview mirrors and adjust properly before driving.**
- **Do not place objects in the rear of the vehicle which may hinder visibility or interfere with your vision from the rear window glass.**

Inside Rearview Mirror

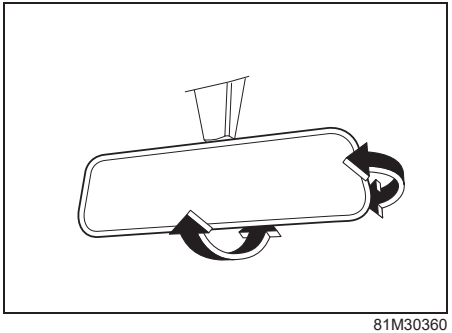

81M30360

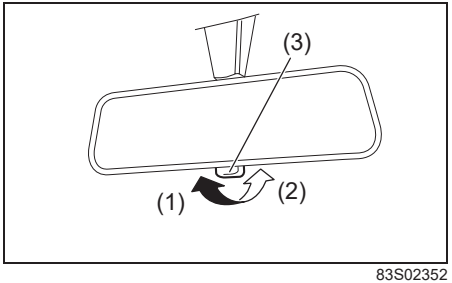

83S02352

(1) Night driving
(2) Day driving
(3) Selector tab

You can adjust the inside rearview mirror by hand to see the rear of your vehicle in the mirror. To adjust the mirror, set the selector tab (3) to the day position, then move the mirror up, down or sideways by hand to obtain the best view.
When driving at night, you can move the selector tab (3) to the night position to reduce glare from the headlights of vehicles behind you.

⚠ WARNING

- **If you adjust the inside rearview mirror while driving, you could lose control of the vehicle, resulting in an accident.**
  Adjust the inside rearview mirror before driving.
- **Only use the night position if it is necessary to reduce glare from the headlights of vehicles behind you. Be aware that in this position you may not be able to see some objects that could be seen in the day position.**

⚠ CAUTION

Do not modify the inside rearview mirror or install a non-genuine wide mirror. It could result in injury during accident.

Outside Rearview Mirrors

Adjust the outside rearview mirrors so you can just see the side of your vehicle in the mirrors.

⚠ WARNING

If you adjust the outside rearview mirror while driving, you could lose control of the vehicle, resulting in an accident.
Adjust the outside rearview mirror before driving.

Electric mirrors (if equipped)

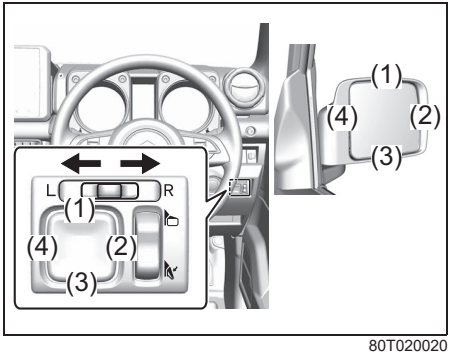

80T020020

The switch to control the electric mirrors is located on the instrument panel. You can adjust the mirrors when the ignition switch is in “ACC” or “ON” position, or the ignition mode is ACC or ON. To adjust the mirrors:

1) Move the selector switch (1) to the left or right to select the mirror you wish to adjust.
2) Press the outer part of the switch (2) that corresponds to the direction in which you wish to move the mirror.
3) Return the selector switch (1) to the center position to help prevent unintended adjustment.

NOTICE

• The electric type outside rearview mirror operates even though the ignition switch is in the ACC position. However, to prevent unnecessary battery discharge, do not adjust the mirrors longer than necessary while the engine is not running.
• The mirrors stop moving when they reach the maximum adjusting angles, but the motor continues to operate while the switch is pressed. Do not continue to press the switch in such a situation as the motor may be damaged.
• Do not attempt to adjust the outside rearview mirror by hand which may cause damage to the motor.
• Do not fold the electrical foldable outside rearview mirror by hand. It could cause motor failure.

Outside Rearview Mirror Folding Switch (if equipped)

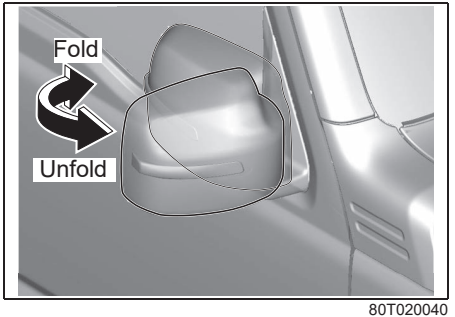

80T020040

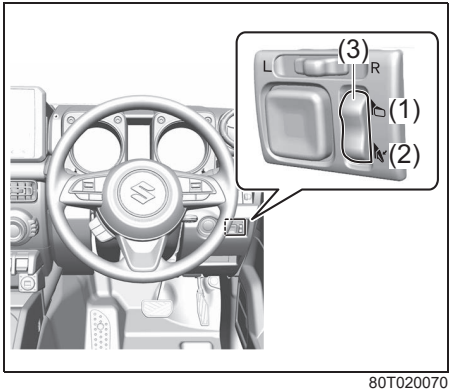

80T020070

(1) Unfold
(2) fold

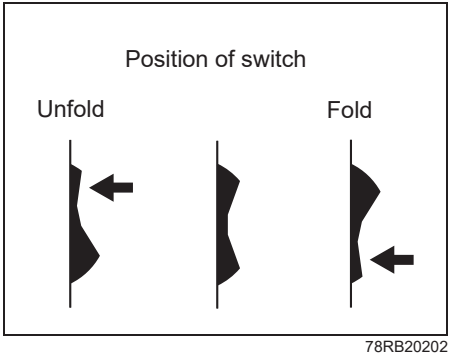

78RB20202

You can fold the mirrors when you park the vehicle in a narrow space. Push the folding switch (3) to fold and unfold the mirrors. Make sure the mirrors are completely unfolded before you start driving.

⚠ WARNING

If you drive the vehicle with the outside rearview mirrors folded, it may result in an accident.
Do not drive the vehicle with the outside rearview mirrors folded.

⚠ CAUTION

Moving mirrors can pinch and injure a hand. Do not allow anyone's hand to get near the mirrors when folding and unfolding the mirrors.

NOTE:

- *If you press the folding switch to open the outside rearview mirrors and simultaneously start the engine, then the outside rearview mirrors may get stuck during that moment. To open the outside rearview mirrors completely, again press the folding switch after starting the engine.*
- *Slight time difference in opening of both outside rearview mirrors is due to angular positioning of the driver seat.*

Rear Seats

Seat Adjustment

⚠ WARNING

- **To avoid excessive seat belt slack, which reduces the effectiveness of the seat belts as a safety device, check that the seats are adjusted before the seat belts are fastened.**
- **All seatbacks should always be in an upright position when driving, or seat belt effectiveness may be reduced. Seat belts are designed to offer maximum protection when seatbacks are in the upright position.**
- **Do not place any object under the rear seat equipped with the seat position adjustment lever. If an object becomes caught under the rear seat, the seat will not be latched.**

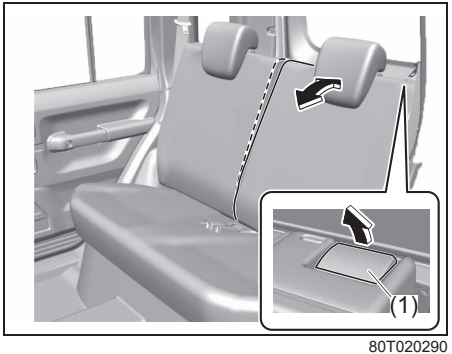

80T020290

Pull the lever (1) up and move the seatback.

After adjustment, move the seat and seatback forward and backward to check that it is securely latched.

Head Restraints

Head restraints are designed to help reduce the risk of neck injuries in the case of an accident.

⚠ WARNING

- **If you drive the vehicle with the head restraint removed, a passenger's backward tilting cannot be prevented in a collision from the backward and the impact to a passenger's head cannot be reduced in a sudden braking or a collision. This may cause severe injury.**
  Never drive the vehicle with the head restraints removed.
- **If the head restraint is installed back to front or it is not installed securely, the head restraint may not provide the best performance in case of emergency, resulting in severe injury.**
  If the head restraint is installed back to front, you cannot adjust the height and install it securely.
  Make sure to install the head restraint securely in the right direction.

(Continued)

⚠ WARNING

(Continued)

- **Being distracted by head restraint adjustment could lead to an accident.**
  Do not attempt to adjust the head restraint while driving.
- **If you try to install a child restraint system and it touches the head restraint, a child may be severely injured in a collision.**
  When you install a child restraint system, adjust the height of the head restraint as high as possible or remove the head restraint for avoiding that the child restraint system touches the head restraint.

⚠ CAUTION

If you leave the removed head restraint in the vehicle, it may jump out and hit passengers or objects, resulting in injury or damage.
Do not leave the removed head restraint in the vehicle.

NOTE:
It may be necessary to fold forward the seatback to provide enough overhead clearance to remove the head restraint.

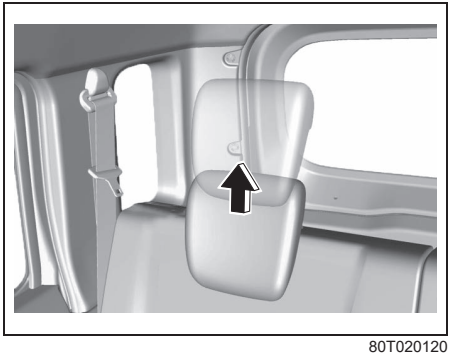

80T020120

To raise the rear head restraint, pull up the head restraint until it clicks.

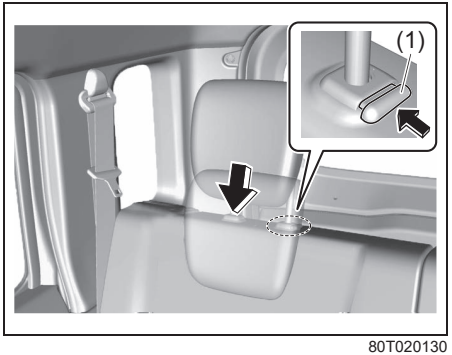

80T020130

To lower the head restraint, push down the head restraint while holding in the lock button (1). If a head restraint must be removed (for cleaning, replacement, etc.), push in the lock button (1) and pull the head restraint all the way out.

When installing a child restraint system, adjust the height of the head restraint or remove it for fitting the child restraint system, as necessary.

Seat Utility

Folding Rear seats

⚠ CAUTION

Remove objects from the rear seats before folding the rear seats. There may be a case that the rear seat belt reminder will not be activated, if objects are remained on the rear seats.

To fold the rear seats forward:

1) Lower the head restraint fully.

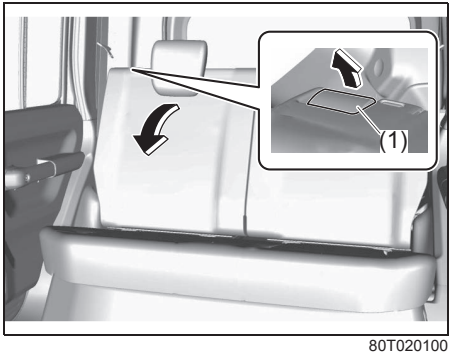

80T020100

2) Pull the release lever (1) on the top of each split seat, and fold the seatbacks forward.

NOTICE

After folding the rear seatback forward, do not allow any foreign material to enter the lock opening. This may cause damage to the inside of the lock and prevent the seatback from being locked securely.

⚠ WARNING

If you need to carry cargo in the passenger compartment with the rear seatback folded forward, secure the cargo or it may be thrown about, causing injury. Never pile cargo higher than the seatbacks.

To return the seat to the normal position, follow the procedure below.

⚠ CAUTION

When returning the rear seatback to the normal position, be careful that your finger is not caught between the lock and the striker.

NOTICE

When returning the rear seatback to the normal position, check that there is nothing around the striker. Any foreign materials prevent the seatback from being locked securely.

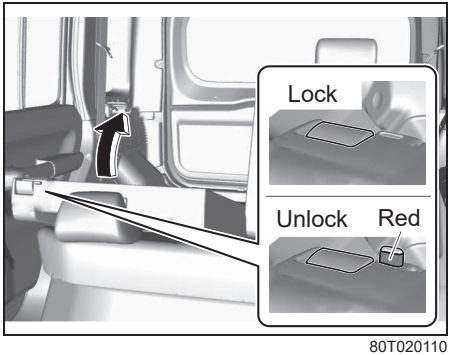

80T020110

Raise the seatback until it locks into place.

After returning the seat, move the seatback forward and backward to check that it is securely latched.

⚠ CAUTION

- **Do not put your hand into the rear seatback lock opening, or your finger may get caught and be injured.**
- **After securing the rear seatback, check that it is locked securely. If it is not, red button will appear beside the release lever.**

NOTICE

- **When returning the rear seatback to the normal position, do not allow any foreign material to enter the lock opening. This may prevent the seatback from being locked securely.**
- **When returning the rear seatback to the normal position, handle it carefully by hand to avoid any damage to the lock itself. Do not push it by using some material or by applying excessive force.**
- **As the lock is designed exclusively for securing the rear seatback, do not use it for any other purpose. Incorrect use of it may cause damage to the inside of the lock and prevent the seatback from being locked securely.**

NOTE:
After returning the rear seatback, check that the seat belts are not twisted or caught in the rear seatback.

Safety for Child

For safety, carefully drive at lower speed than usual.

Place a Child in the Rear Seat

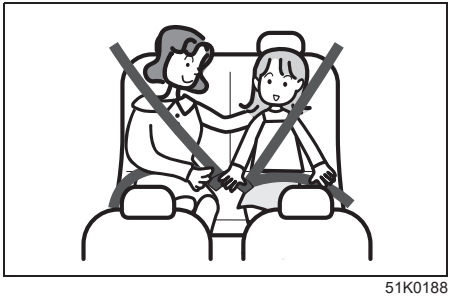

51K0188

- Seat a child next to an adult when possible, and ensure that the child can be visually monitored.
- Select an appropriate child restraint system suitable for the child's age and physical size.

⚠ WARNING

- **If you do not use the child-proof lock, a child may open a door and the child may be thrown out, resulting in severe injury. To avoid this, use the child-proof lock setting.**
- **When it is necessary to seat the child who does not need a child restraint system in the front passenger's seat, observe the following point.**
  - **Slide the front passenger's seat all the way back. If the front passenger's seat is in a forward position, there is a risk of serious injury due to major impact if the front passenger's seat airbag was to be deployed.**

(Continued)

⚠ WARNING

(Continued)

59RN04650

  - **If a child put a hand out of the window or lean on a door, the child may get severe injury by a strong impact of side or curtain airbag activation.**
    Do not allow a child to put hand out of the window or lean on a door.
- **Do not allow the hands or feet, etc., of a child near movable parts inside a vehicle, such as the seat rails. Otherwise, there is the possibility of injury.**

A Child Needs to Wear Seat Belt

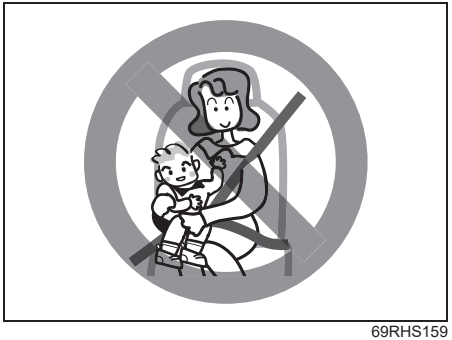

69RHS159

⚠ WARNING

- **Do not drive with a child on your lap. Even if you hold the child tightly, proper support is not possible, and in the event of a collision, etc., the child may get serious injury.**
- **If a child does not wear a seat belt, in a sudden braking and a collision, the child may get serious injury.**
  Be sure to always have a child wear a seat belt.

(Continued)

⚠ WARNING

(Continued)

- **If two or more people use a single seat belt, in a sudden braking and a collision, the seat belt may not provide the best performance, resulting in severe injury.**
  Do not allow two or more people to use a single seat belt.

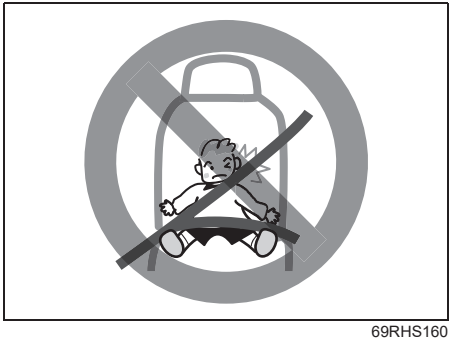

69RHS160

⚠ WARNING

- **The seat belts of this vehicle are designed to be suitable for occupants of adult size. If the shoulder strap rests on the neck or chin of a child rather than the shoulder, or if the lap portion of the belt does not rest securely on the hipbone, ensure that the child is seated in a child restraint system placed in the rear seat. Failure to properly use a seat belt may result in serious injury to the child.**
- **Use a child restraint system securely fastened to the rear seat for any child that cannot hold their head upright or sit on their own.**

Do not Let a Child Play with Seat Belt

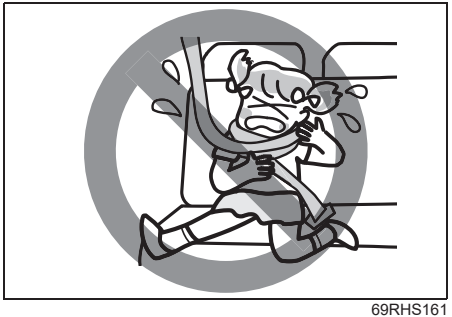

69RHS161

⚠ WARNING

If a child play with a seat belt, for example, if the child's body is wrapped by the seat belt, it may cause severe injury such as suffocation. In case of emergency, cut the seat belt with scissors.

Using the Child Restraint System

Refer to “Securing Child Restraint System by Seat Belt” in this section.

An Adult Needs to Open or Close Each Door or Window, and Adjust Seats

Only an adult should open or close each door or window and adjust seats, not to get a child’s hands, arms, legs or neck, etc. caught in.

69RHS162

⚠ WARNING

- **If the windows are not locked, a child may operate the windows by mistake or the other passengers may be caught in the windows.**
  To avoid unintended operation of the power window by a child, use the window lock switch.

(Continued)

⚠ WARNING

(Continued)

- **If you leave the power window in ready condition, it may cause unintended operation of the power window by a child, resulting in an accident.**
  When you leave the vehicle, make sure to turn the ignition switch to “OFF” position or press the engine switch to change the ignition mode to OFF, keep the key with you and leave the vehicle with your child.

Do not Let a Child Stick His/her Head or Hands out of the Window

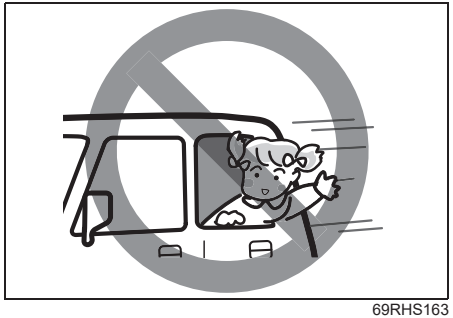

69RHS163

⚠ WARNING

Ensure that a child does not put their hands or heads, etc., out the windows. Otherwise, serious injuries due to falling out or sudden braking may occur. Moreover, serious injury could also occur if a child were to come into contact with objects outside the vehicle.

Do not Leave a Child Unattended in the Vehicle

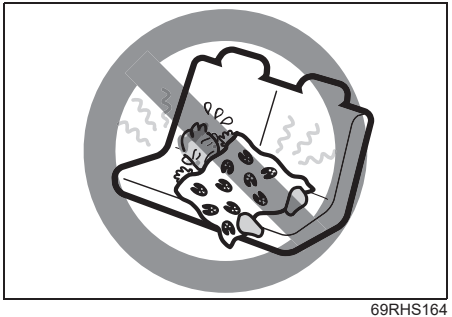

69RHS164

⚠ WARNING

When getting out of the vehicle, do not allow a child to stay in the vehicle without you.

- **Unintended and wrong operations by a child may cause a fire or an accident from the vehicle start.**
- **As the inside temperature of the vehicle will become hot under the blazing sun, a child may suffer from heat stroke or dehydration, resulting in severe health problems or death in the worst case. Even if you turn on the air conditioner, do not leave a child alone in the vehicle.**

Do not Place a Child in Luggage Compartment

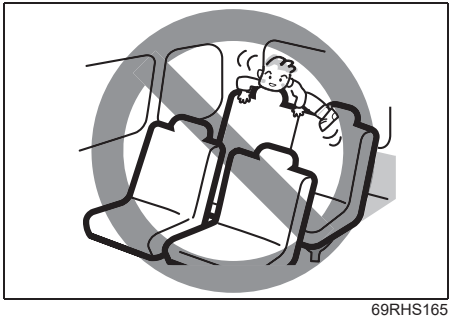

69RHS165

⚠ WARNING

The luggage areas do not feature a structure that can accommodate people. Do not allow a child to ride in such areas. Otherwise, there is the danger of accidents due to sudden braking, etc. Do not let a child play in luggage areas even while the vehicle is stopped on the road.

Seat Belt

A Child Needs to Wear Seat Belt

Refer to “Safety for Child” in this section.

Information for Pregnant Woman and the Sick Person

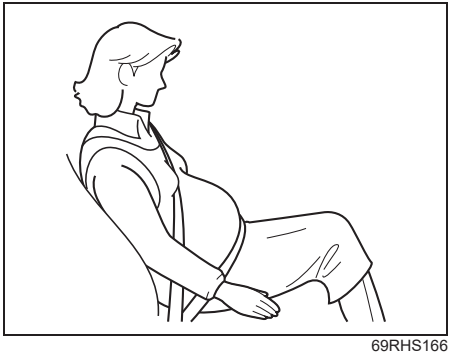

69RHS166

⚠ WARNING

- **Those that are pregnant or sick/disabled must also wear their seat belts. However, in the event of a collision, there is the danger of heavy pressure focused on certain body areas. Consultation with a physician is recommended.**
- **For those that are pregnant, ensure that the lap portion of the belt is as low as possible across the pelvis, avoiding to touch the abdomen. Make sure that the shoulder strap rests halfway between the shoulder and the base of the neck, crossing the chest and avoiding to touch the abdomen.**

Lap-shoulder Belt

Emergency locking retractor (ELR)

The seat belt has an emergency locking retractor (ELR), which is designed to lock the seat belt only during a sudden stop or impact. It also may lock if you pull the belt across your body very quickly. If this happens, let the belt go back to unlock it, and then pull the belt across your body more slowly.

Safety reminder

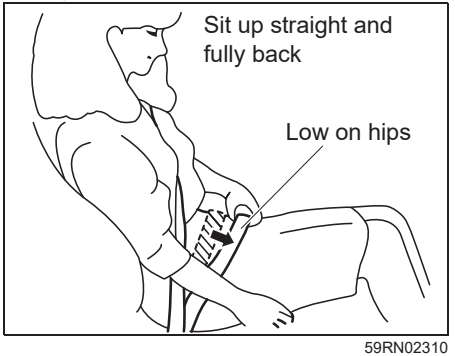

59RN02310

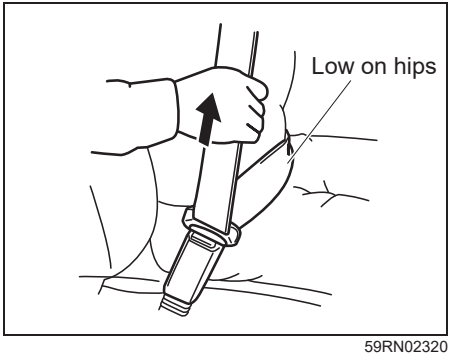

59RN02320

To reduce the risk of sliding under the belt during a collision, position the lap portion of the belt across your lap as low on your hips as possible and adjust it to a snug fit by pulling the shoulder portion of the belt upward through the latch plate. The length of the diagonal shoulder strap adjusts itself to allow freedom of movement.

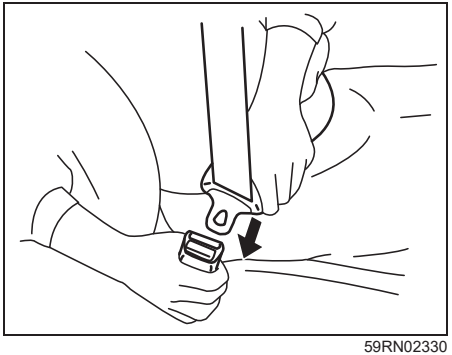

59RN02330

To fasten the seat belt, sit up straight and far back into the seat, pull the latch plate attached to the seat belt across your body and press it straight into the buckle until you hear a click. After pressing the latch plate into the buckle, pull the seat belt to make sure it is securely latched.

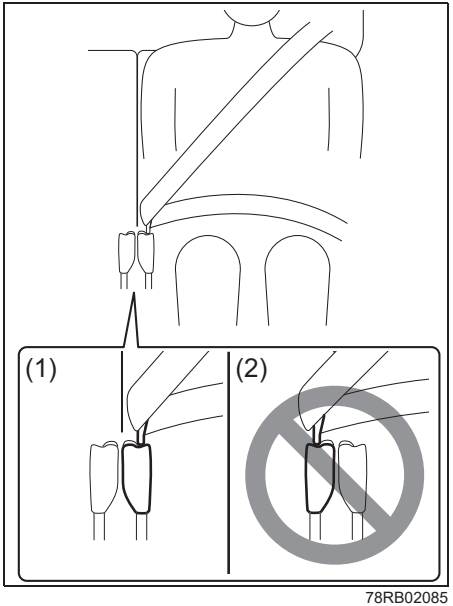

78RB02085

(1) Correct
(2) Wrong

⚠ WARNING

When fastening the rear seat belt, always use the closest buckle to you. If you use the buckle for your next rear seat position by mistake, the rear seat belt may not function properly.

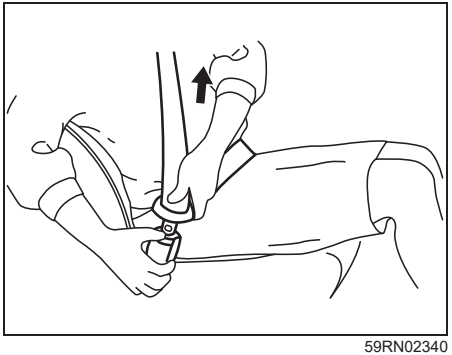

59RN02340

To unfasten the seat belt, push the red “PRESS” button on the buckle and retract the belt slowly while holding the belt or/and the latch plate.

NOTE:
If the seat belt cannot be pulled from its fully retracted position, firmly pull the belt and release it. Then smoothly pull the belt out of the retractor.

Adjustment of Seat Belt Length

The seat belt does not require length adjustment. The seat belt extends and retracts according to the movement of the body. If the seat belt gets a strong impact, the belt locks its tension automatically, in order to secure the body.

Correct Use of Seat Belt

⚠ WARNING

Use the seat belt correctly. Otherwise, in a sudden braking or a collision, the body may not be restrained, resulting in severe injury. Observe the following points.

- **If the seat belt is twisted or contains excessive slack, there is danger of heavy pressure focused on certain body areas.**
- **If the seat belt rests on the abdomen, this area may sustain heavy pressure when you get a strong impact.**
- **If the seat belt does not rest firmly over the shoulder, you may be thrown forward when you get a strong impact.**

Seat Belt Reminder

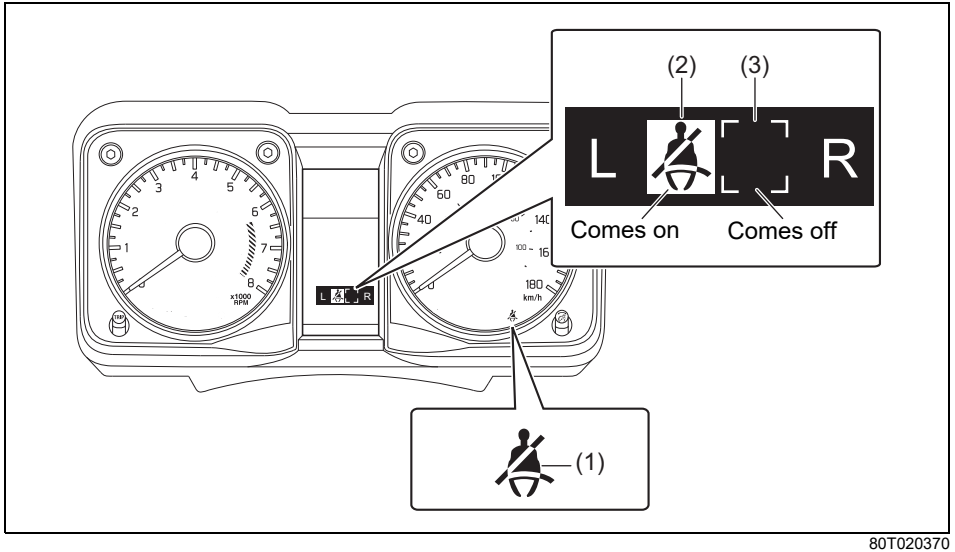

80T020370

(1) Driver's seat belt reminder light / front passenger's seat belt reminder light.
(2) Rear passenger's seat belt reminder light (rear left)
(3) Rear passenger's seat belt reminder light (rear right)

For more details, refer to the explanation below.

⚠ WARNING

It is absolutely essential that the driver, front passenger and rear passenger fasten their seat belts at all times. Persons who are not fastening seat belts have a much greater risk of injury if an accident occurs. Make a regular habit of buckling your seat belt before starting the engine.

NOTE:

- *Along with the seat belt reminder light, a reminder message shall also come on the information display (if equipped), for unrestrained driver and/or front passenger.*
- *The driver's seat belt reminder light / front passenger's seat belt reminder light is for both the driver and front passenger.*

Driver's seat belt reminder

If the driver's seat belt remains unbuckled when the ignition switch is turned to "ON" position or the engine switch is pressed to change the ignition mode to ON, the reminder works as follows:

1) The driver's seat belt reminder light will come on. The front passenger's seat belt reminder light will also come on if a front passenger does not fasten his/her seat belt.
2) After the vehicle's speed has reached about 15 km/h, the driver's seat belt reminder light will blink and a buzzer will sound for about 95 seconds.
3) The reminder light will remain on until the driver's seat belt is buckled.

If the driver has buckled his or her seat belt and later unbuckles the seat belt, the reminder system will be activated from Step 1) or 2) according to the vehicle's speed. When the vehicle's speed is less than 15 km/h, the reminder will start from Step 1). When the vehicle's speed is more than 15 km/h, the reminder will start from Step 2).

The reminder will be automatically canceled when the driver's seat belt is buckled or the ignition switch is turned to off, or the engine switch is pressed to change the ignition mode to LOCK (OFF).

Front passenger's seat belt reminder

If there is a person sitting in the front passenger seat and the front passenger seat belt is unbuckled when the ignition switch is turned to "ON" position or the engine switch is pressed to change the ignition mode to ON, the front passenger's seat belt reminder will activate.

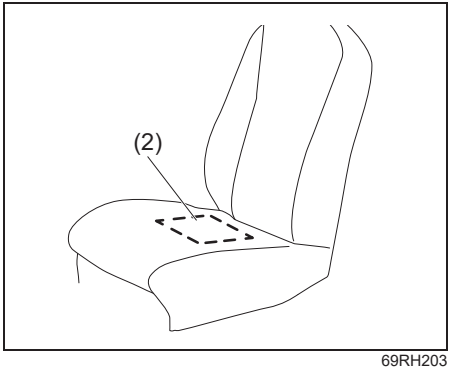

69RH203

(2) The sensor of the front passenger's seat belt reminder

The seat belt reminder sensor (2) detects whether a person is sitting in the front seat. The sensor of the front passenger's seat belt reminder is located in the seat cushion. The front passenger's seat belt reminder works in the same manner as the driver's seat belt reminder.

NOTICE

- **The sensor of the front passenger's seat belt reminder is located in the seat cushion. If heavy or sharp objects are put on the seat cushion, or a removal, disassembly and modification of the passenger's seat are performed, the sensor may not work properly or can be damaged. Do not put heavy or sharp objects on the seat cushion. Do not remove, disassemble and modify the passenger's seat.**
- **Depending on the variety of seat cover, operation of the sensor may be adversely affected. Maruti Suzuki highly recommends that you use Maruti Suzuki genuine seat cover exclusively for this vehicle. If a seat cover is installed, consult with a Maruti Suzuki authorized workshop.**
- **If you spill liquid such as liquid aromatics, soft drinks or juice on the front passenger's seat cushion, the sensor of the front passenger's seat belt reminder located in the seat cushion can be damaged. Immediately wipe it dry with a soft cloth when spilled.**

(Continued)

NOTICE

(Continued)

- **When sitting on the front passenger's seat, it is very important that the passenger sits upright, leaning against the seat backrest and centered on the seat cushion in order for the seatbelt reminder system to function effectively. An occupant sitting improperly (slouches, turns sideways, sits forward or sideways) may hamper the functioning of this system as it may not detect the occupant.**

NOTE:

- *If you put an object on the passenger's seat, the weight of the object will be sensed by the sensor and the front passenger's seat belt reminder light will come on and then the interior buzzer may beep.*
- *If a child or a small sized person sit on the front passenger's seat or the cushion is put on the front passenger's seat, the weight will not be sensed by the sensor and the interior buzzer may not beep.*

Rear passenger's seat belt reminder

Reminder light in speedometer for rear passengers to fasten their seat belts.
Whether or not a passenger is seated, the rear seat belt reminder system works as follows, when ignition mode is turned ON:

1) Reminder light will turn ON for the non-buckled seats and continue for vehicle speed below 15km/h.
2) When vehicle speed is above 15km/h, reminder light will remain ON for the non-buckled seats for about 65 seconds and then turn OFF.
3) Further, when a buckled seat belt is unbuckled, the corresponding reminder light will turn ON. Above 15km/h, the reminder light will blink (about 65 seconds) along with a buzzer sound (about 35 seconds). The reminder light will remain ON until the seat belt is buckled.

If rear door is opened in vehicle stationary condition, then reminder system will start from step 1.
The reminder will be automatically canceled when all the rear seat belts are buckled or the ignition mode to LOCK (OFF).

Handling and Care for Seat Belt

Seat Belt Handling

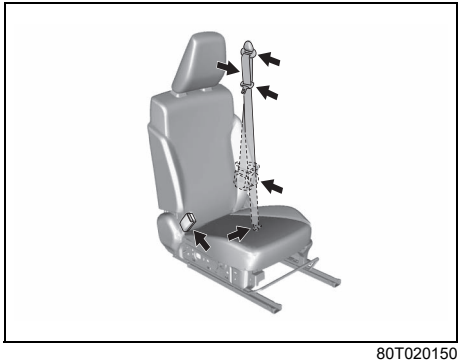

80T020150

Periodically check if the seat belts work properly and are not damaged. Check the webbing, buckles, latch plates, retractors, anchorages and guide loops. Replace any seat belts which do not work properly or are damaged.

⚠ WARNING

- **Inspect all seat belt assemblies after any collision. Any seat belt assembly which was in use during a collision (other than a very minor one) should be replaced, even if damage to the assembly is not obvious. Any seat belt assembly even which was not in use during a collision must be replaced if the seat belt pretensioners were activated. The pretensioners and the load limiter only function once. In case they did not activate, consult with a Maruti Suzuki authorized workshop.**
- **If frays, scratches, cuts are found on the seat belt, replace it with a new one.**
- **If the buckle does not work properly, ask your Maruti Suzuki authorized workshop for inspection.**
- **If strong force was applied to the seat belt in a collision, the seat belt function may be damaged, even though its appearance is normal. Replace the seat belt with a new one.**

(Continued)

⚠ WARNING

(Continued)

- **As the seat belt may not provide the best performance and it may result in severe injury in case of emergency, observe the following points.**
  - **When foreign material enters into the buckle or you spill a drink, the seat belt may not work properly. In this case, ask your Maruti Suzuki authorized workshop for inspection.**
  - **As the seat belt may be damaged, be careful not to get the seat belt caught in the door. Before closing the door, check that the seat belt is retracted without any slack.**
  - **Do not modify or remove the seat belt.**

Seat Belt Care

Caring for seat belts is the same as caring for any type of regular cloth material, etc.

⚠ WARNING

Do not use bleach, solvent or dyes on seat belts. Doing so may cause stains, discoloration and strength deterioration, and the seat belt may not function properly.

Seat Belt Pretensioner System (Only for Front Seat)

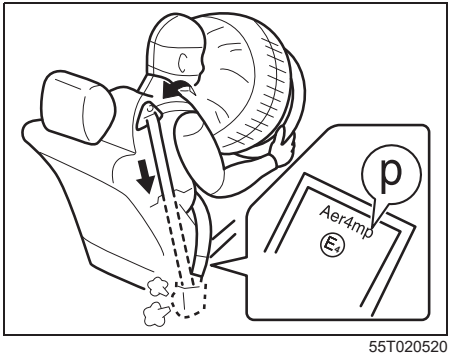

55T020520

⚠ WARNING

This section describes your Maruti Suzuki vehicle's seat belt pretensioner system. Read and follow all these instructions carefully to minimize your risk of severe injury or death.

To determine if your vehicle is equipped with a seat belt pretensioner system at the front or rear seating positions, check the label on the seat belt at the bottom part. If the letter "p" appears as illustrated, your vehicle is equipped with the seat belt pretensioner system. You can use the pretensioner seat belts in the same manner as ordinary seat belts.
Read this section and "Supplemental Restraint System (Airbags)" section to learn more about the pretensioner system.

The seat belt pretensioner system works with the supplemental restraint system (airbags). The crash sensors and the electronic controller of the airbag system also control the seat belt pretensioners. The pretensioners are triggered only when there is a frontal or side collision severe enough to trigger the airbags and the seat belts are fastened. For precautions and general information including servicing the pretensioner system, refer to "Supplemental Restraint System (Airbags)" section in addition to this "Seat Belt Pretensioner system" section, and follow all those precautions.
The pretensioner is located in each front seat belt retractor. The pretensioner tightens the seat belt so the belt fits the occupant's body more snugly in the event of a frontal or side collision. The retractors will remain locked after the pretensioners are activated. Upon activation, some noise will occur and some smoke may be released. These conditions are not harmful and do not indicate a fire in the vehicle.

The driver and all passengers must be properly restrained by fastening seat belts at all times, whether or not a pretensioner is equipped at their seating position, to minimize the risk of severe injury or death in the event of a collision.

Sit fully back in the seat; sit up straight; do not lean forward or sideways. Adjust the belt so the lap portion of the belt is worn low across the pelvis, not across the waist. Please refer to "Seat Adjustment" section and the instructions and precautions about the seat belts in this "Seat Belts and Child Restraint Systems" section for details on proper seat and seat belt adjustments.

Please note that the pretensioners along with the airbags will activate in severe frontal or side collisions. They are not designed to activate in rear impacts, rollovers, or minor frontal side collisions. The pretensioners can be activated only once. If the pretensioners are activated (that is, if the airbags are activated), have the pretensioner system serviced by Maruti Suzuki authorized workshop as soon as possible.

The pretensioner system or the airbag system may not work properly if any of the following conditions occurs:

1) If the air bag warning light on the instrument cluster does not come on briefly, when the ignition switch is turned to the "ON" position or the engine switch is pressed to change the ignition mode to "ON".

2) If the air bag light comes on and stays on for more than 10 seconds, when the

ignition switch is turned to the “ON” position or the engine switch is pressed to change the ignition mode to “ON”.

3) If the air bag light comes on while driving.

Have both systems inspected by Maruti Suzuki authorized workshop as soon as possible.

Service on or around the pretensioner system components or wiring must be performed only by Maruti Suzuki authorized workshop. who is specially trained. Improper service could result in unintended activation of pretensioners or could render the pretensioner inoperative. Either of these two conditions may result in personal injury.

To prevent damage or unintended activation of the pretensioners, check that the lead-acid battery is disconnected and the ignition switch has been in “LOCK” position or the ignition mode has been in LOCK (OFF) for at least 90 seconds before performing any electrical service work on your Maruti Suzuki vehicle.

Do not touch pretensioner system components or wiring. The wires are wrapped with yellow tape or yellow tubing, and the couplers are yellow. When scrapping your Maruti Suzuki vehicle, ask a Maruti Suzuki authorized workshop, body repair shop, or scrap yard for assistance.

For Proper Operation of Seat Belt Pretensioner System

Do not modify any parts that can affect the functionality of the seat belt pretensioner system. The seat belt may be retracted unexpectedly, or it may not be properly retracted when necessary.

Disposal and Scrapping

Seat belt pretensioners that have not been activated must be activated according to the predetermined procedure before disposal.

⚠ WARNING

If you do not handle a pretensioner properly for disposal, the pretensioner system may activate unexpectedly, resulting in severe injury. When disposing of a pretensioner or scrapping the vehicle equipped with a pretensioner, consult with a Maruti Suzuki authorized workshop

Seat Belt Force Limiter System (if equipped)

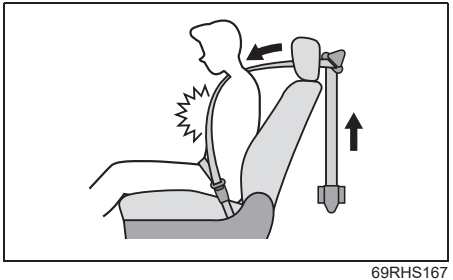

69RHS167

In the event of a strong impact coming from the front, the seat belt force limiter operates in two stages (driver’s seat) and one stage (front and rear passenger’s seat) to reduce a force to the shoulder strap, thus lessening the impact being sustained by the front passengers.

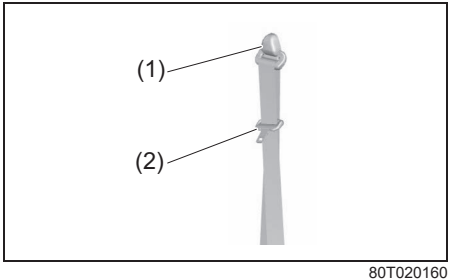

80T020160

⚠ WARNING

If the seat belt sustains strong impact, the resin of the shoulder anchor part (1) and the tongue plate part (2) could soften due to heavy friction, thus sticking to the seat belt, making the belt slide less easily. In such a case, the seat belt may not provide the best performance, resulting in severe injury in case of emergency. Have the seat belt replaced by Maruti Suzuki authorized workshop.

Child Restraint Systems

Child Restraint System Usage

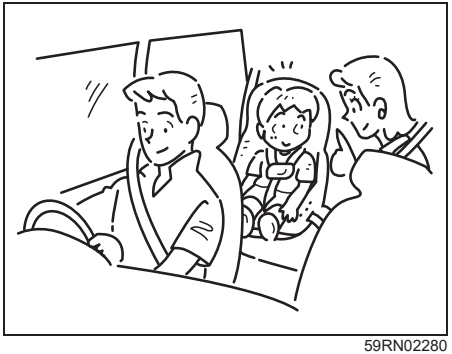

59RN02280

The following types of child restraint system are available generally.

Infant restraint

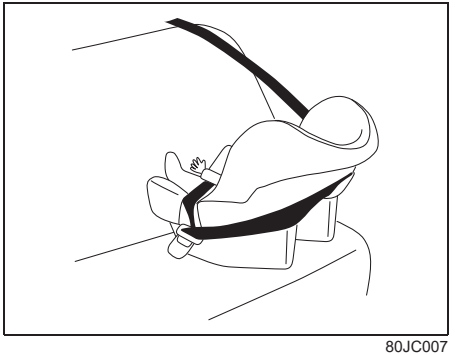

80JC007

Child restraint

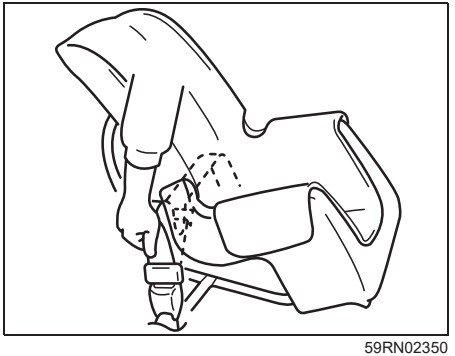

59RN02350

Booster seat

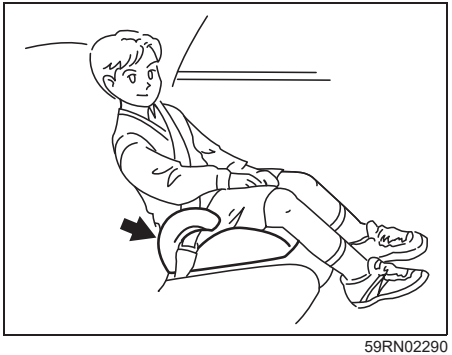

59RN02290

Maruti Suzuki highly recommends that you use a child restraint system to restrain infants and small children. Many different types of child restraint systems are available; check that the restraint system you select meets applicable safety standards.

All child restraint systems are designed to be secured in vehicle seats either by seat belts (lap belts or the lap portion of lap-shoulder belts) or by special rigid lower anchor bars built onto the floor. Whenever possible, Maruti Suzuki recommends that child restraint systems be installed on the rear seat. According to accident statistics, children are safer when properly restrained in rear seating positions than in front seating positions.

NOTE:
Observe any statutory regulation about child restraints.

⚠ WARNING

61M0241

- **Do not install a child restraint system on the front passenger's seat.**

(Continued)

⚠ WARNING

(Continued)

- **When installing a child restraint system to the rear seat, touching the child's foot or the child restraint system to the seatback of the front seat can cause serious injury to the child in the event of an accident. Adjust the front seat so that it does not touch the child or the child restraint system.**
- **If child restraint systems are not installed properly, children or other occupants could be seriously injured in the event of an accident. Secure the child restraint system firmly according to both this manual and the instruction provided by child restraint system's manufacturer.**

(Continued)

⚠ WARNING

(Continued)

- **If the child is not secured properly in the child restraint system, it could cause serious injury to the child in the event of an accident. Use the child restraint system correctly following the instruction provided by child restraint system's manufacturer.**
- **If you recline the seatback, a child restraint system may not be secured properly and a child body may slip beneath the seat belt. This may cause severe injury.**
  Do not recline the seatback when a child restraint system is installed on the seat.
- **If you use the child restraint system which was severely damaged by an accident, etc., it may not provide the best performance. This may cause severe injury to a child.**
  If the child restraint system was severely damaged by an accident, etc., do not reuse the child restraint system even though its appearance looks normal.

Child Restraint Systems for India

Child Restraint

The suitability of each passenger's seat position for carriage of children and fitting of child restraint system is shown in the table below. Whenever you carry children up to 12 years of age, properly use the child restraints which conform to AIS 072, the standard for child restraints, referring to the table.

MASS GROUP		Seating position (or other site)				
		Front Passenger	Rear Outboard	Rear Center	Intermediate Outboard	Intermediate Center
Group 0	Up to 10 kg	X	U	N.A.	N.A.	N.A.
Group 0+	Up to 13 kg	X	U	N.A.	N.A.	N.A.
Group I	9 to 18 kg	X	U	N.A.	N.A.	N.A.
Group II	15 to 25 kg	X	U	N.A.	N.A.	N.A.
Group III	22 to 36 kg	X	U	N.A.	N.A.	N.A.

Key of letters to be inserted in the above table:
U =Suitable for 'universal' category restraints approved for use in this mass group
X =Seat position not suitable for children in this mass group
N.A = Seat position not available for children in this mass group.

NOTE:
- *'universal' is the category in the AIS 072.*
- *'Outboard' indicates window side seat.*

Securing Child Restraint System by Seat Belt

Choose the appropriate seat for the child's age and physical size.

⚠ WARNING

61M0241

- **Do not install a child restraint system on the front passenger's seat.**
- **If you install a child restraint system in the rear seat, slide the front seat far enough forward so that the child's feet do not contact the front seatback. This will help avoid injury to the child in the event of an accident.**

(Continued)

⚠ WARNING

(Continued)

- **Do not hold a child on passenger'S lap when the vehicle is in motion.**
- **Even if the passenger holds the child tightly, he/she would not be supported enough in the event of an accident and it could result in a serious injury of the child.**

⚠ CAUTION

If your vehicle is equipped with the head restraint, adjust the height of the head restraint or remove it for fitting the child restraint, as necessary. However, if a booster cushion not equipped with the head restraint is fitted, the head restraint should not be removed. If the head restraint is removed for fitting the child restraint, you need to install it again after removing the child restraint.
If the child restraint is fitted improperly, a child sitting in it could be injured in a collision.

NOTE:
Stow the removed head restraint in the luggage compartment so it will not cause inconvenience to the occupants.

Securing

This section explains securing the child restraint system in the rear seat.

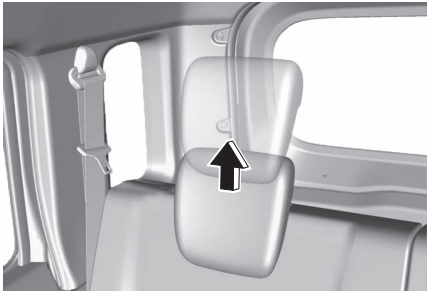

80T020120

1) When the child restraint system contacts the head restraint, adjust the height of the head restraint or remove it for fitting the child restraint system.

⚠ WARNING

If the child restraint system contacts the head restraint, the child restraint system cannot be secured firmly. This may cause severe injury to a child in a collision.
When installing the child restraint system, adjust the head restraint height to the highest position as much as possible or remove the head restraint so that the child restraint system would not contact the head restraint.

2) If your vehicle is equipped with the reclining mechanism of rear seatback, adjust the angle of the seatback so that there is no gap between the child restraint system and the seatback.
3) Make sure that the child restraint system is securely fastened to the main seat.
4) Make sure to pass the seat belt of the passenger's seat through the specified parts, according to the instruction manual that came with the child restraint system.

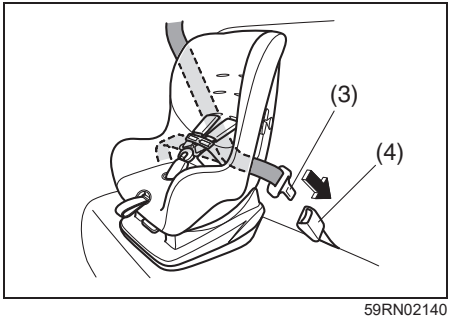

59RN02140

5) Insert the tongue plate (3) firmly into the seat belt buckle (4) until you hear a click.
   • The child restraint system in the above figure is a typical example.

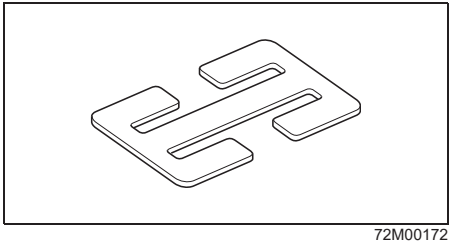

72M00172

6) If the child restraint system does not have a seat belt locking mechanism or a locking clip, secure it to the seat by using an aftermarket locking clip.
   • The aftermarket locking clip shown in the above figure is a typical example.

⚠ WARNING

Failure to securely fasten a child restraint system via the seat belt locking mechanism or a locking clip may cause serious injury to a child when sudden braking or a collision occurs.

7) Shake the child restraint system back and forth, and left and right to check if it is securely in position.
   - If you cannot ensure secure positioning, check the instruction manual that came with the child restraint system or consult the dealer where you purchased the seat.

⚠ WARNING

Make sure to position the child restraint system securely. Failure in doing so could result in the child sustaining serious injury when sudden braking or a collision occurs.

Securing Child Restraint System by ISOFIX

Securing

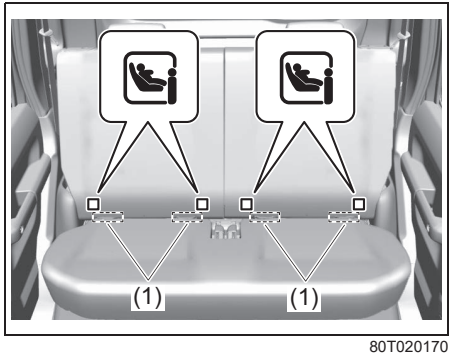

80T020170

(1) Lower anchorage

Your vehicle is equipped with the lower anchorages in the rear seats for securing a ISOFIX type of child restraints with the connecting bars. The lower anchorages are located where the rear of the seat cushion meets the bottom of the seatback.

Install the ISOFIX type child restraint system according to the instructions provided by the child restraint system manufacturer. After installation, try moving the child restraint system in all directions especially forward to check that connecting bars are securely latched to the anchorages.

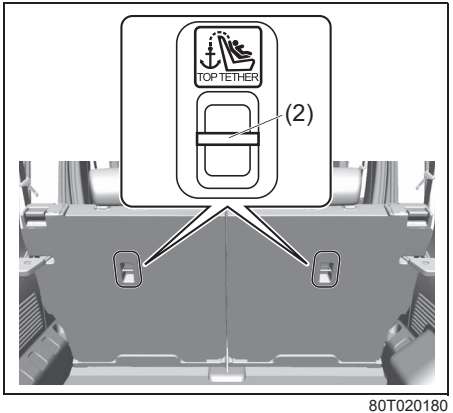

80T020180

(2) Top tether anchorage

Your vehicle is equipped with the top tether anchorages. Use the top tether strap of the child restraint according to the instructions provided by the child restraint system manufacturer.

Here is a general instruction:

⚠ CAUTION

If your vehicle is equipped with the head restraint, adjust the height of the rear head restraint or remove it for fitting the child restraint, as necessary. However, if a booster cushion not equipped with the head restraint is fitted, the head restraint should not be removed. If the head restraint is removed for fitting the child restraint, you need to install it again after removing the child restraint.
If the child restraint is fitted improperly, a child sitting in it could be injured in a collision.

NOTE:
Stow the removed head restraint in the luggage compartment so it will not cause inconvenience to the occupants.

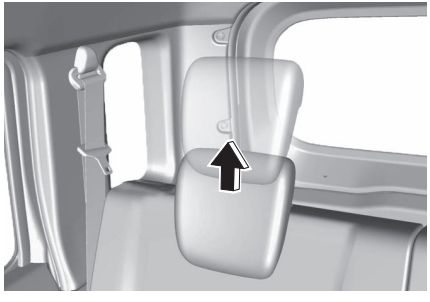

80T020120

1) When the child restraint system contacts the head restraint, adjust the height of the head restraint or remove it for fitting the child restraint system.

⚠ WARNING

If the child restraint system contacts the head restraint, the child restraint system cannot be secured firmly. This may cause severe injury to a child in a collision.
When installing the child restraint system, adjust the head restraint height to the highest position as much as possible or remove the head restraint so that the child restraint system would not contact the head restraint.

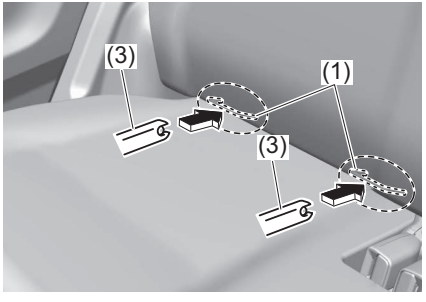

80T020190

2) Place the child restraint in the rear seat, inserting the connecting bars (3) to the lower anchorages (1) between the seat cushion and the seatback.

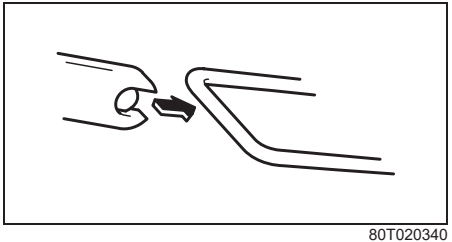

80T020340

3) Use your hands to carefully align the connecting bar tips with the anchorages. Take care not to pinch your fingers.

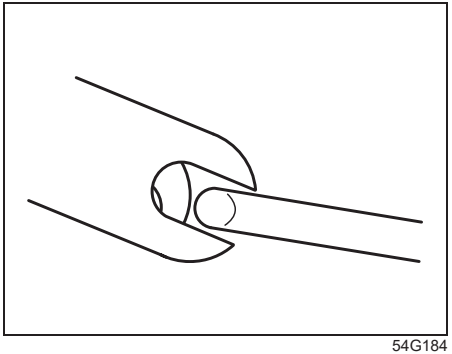

54G184

4) Push the child restraint toward the anchorages so that the connecting bar tips are partially hooked to the anchorages. Use your hands to confirm the position.

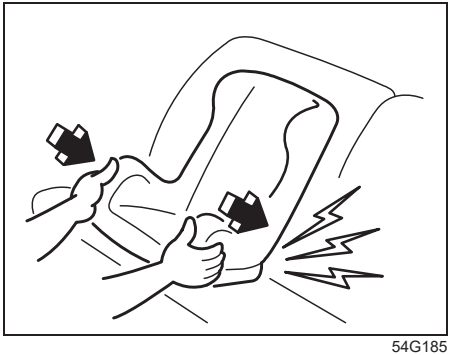

54G185

5) Grasp the front of the child restraint and push the child restraint forcefully to latch the connecting bars. Check that they are securely latched by trying to move the child restraint system in all directions, especially forward.
6) Attach the top tether strap referring to “Installation of child restraint with top tether” section.
When you put your child in the child restraint system, appropriately slide the front seat forward not to touch a part of your child’s body.

NOTICE

When installing a child restraint system to the rear seat, adjust the front seat position so that the front seat does not interfere with the child restraint system.

Installation of Child Restraint with Top Tether

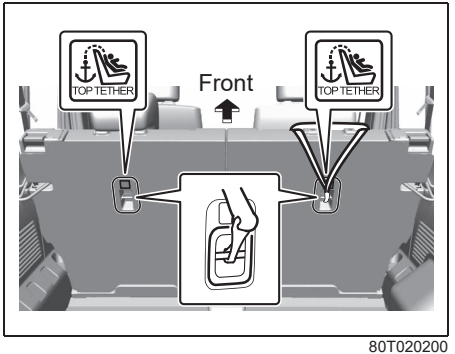

80T020200

Some child restraint systems require the use of a top tether strap. Top tether anchorages are provided in your vehicle at the locations shown in the illustrations.
The number of the top tether anchorage brackets provided in your vehicle depends on the vehicle specification. Install the child restraint system as follows:

1) Secure the child restraint on the rear seat using the procedure described above for securing a restraint system that does not require a top tether strap.

2) Hook the top tether strap to the top tether anchorage and tighten the top tether strap according to the instructions provided by the child restraint system manufacturer. Attach the top tether strap to the corresponding top tether anchorage located directly behind the child restraint. Do not attach the top tether strap to the luggage restraint loops (if equipped).

⚠ WARNING

Do not attach the child restraint top tether strap to the luggage restraint loops. Incorrectly attached top tether strap will reduce the intended effectiveness of the child restraint system.

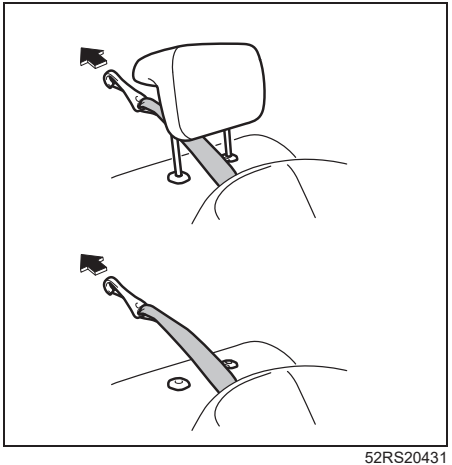

52RS20431

3) When routing the top tether strap, pass the top tether strap as shown in the illustration. (Refer to “Head Restraints” section for details on how to adjust the height of head restraint or remove it.)
4) Check that cargo does not interfere with routing of the top tether strap.

⚠ WARNING

If the seat belt, etc. gets stuck in the child restraint system, it may not be secured properly and this may cause severe injury to a child in a collision. When you install the child restraint system, check that obstacles and the seat belt do not exist near the ISOFIX anchorages and the top tether anchorages.

Supplemental Restraint System (Airbags)

⚠ WARNING

This section describes the protection provided by your Maruti Suzuki vehicle's supplemental restraint system (airbags). Read and follow all instructions carefully to minimize your risk of severe injury or death in the event of a collision.

Your vehicle is equipped with a supplemental restraint system consisting of the following components in addition to a lap-shoulder belt at each seating position.

(1) Side curtain airbag module (if equipped)
(2) Side crash sensor (if equipped)
(3) Forward crash sensor
(4) Front passenger's front airbag module
(5) Driver's front airbag module
(6) Front seat belt pretensioner
(7) Side airbag module (if equipped)
(8) Airbag controller

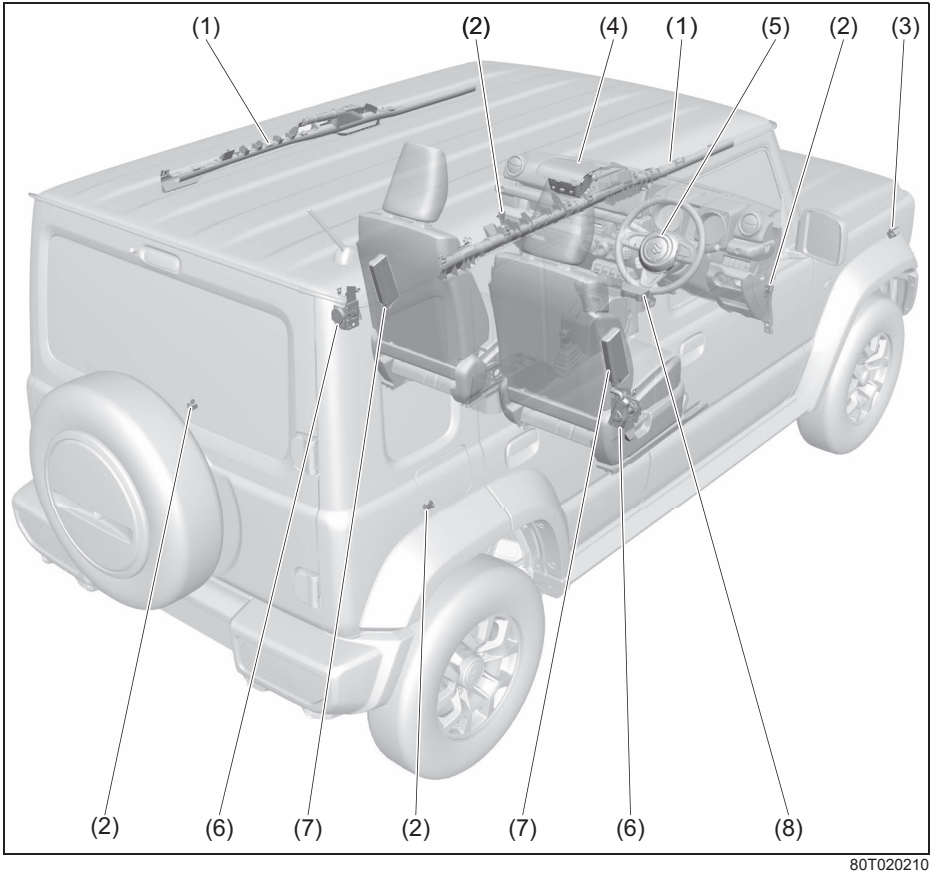

80T020210

What is SRS Airbag System?

SRS stands for “Supplemental Restraint System”. This system aims to restrain passengers in their seats for safety.

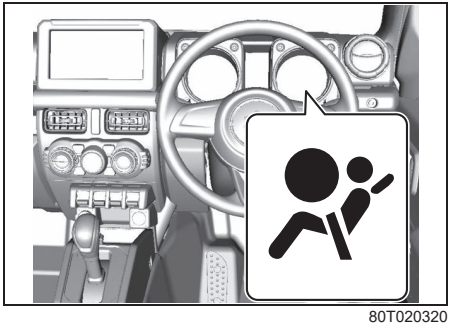

80T020320

If airbag warning light on the instrument cluster does not blink or come on when the ignition switch is first turned to “ON” position, or the ignition mode is first changed to ON, or airbag warning light stays on, or comes on while driving, the airbag system (or the seat belt pretensioner system) may not work properly. Have the airbag system inspected by Maruti Suzuki authorized workshop as soon as possible.

⚠ WARNING

- **SRS airbag system is not a substitute for seat belts. SRS airbag system is the supplemental restraint system and will provide the effectiveness by using the seat belts at the same time.**
  If you and the passengers do not fasten their seat belts, it may result in severe injury in a sudden braking or a collision.
  Even when you drive the vehicle equipped with SRS airbag system, make sure to fasten seat belt.
- **If the seat belts are not fastened properly, airbags may not provide the best performance. This may cause severe injury in a sudden braking and a collision.**
  Make sure that the driver and all the passengers fasten the seat belts properly in a correct posture.

NOTE:
Via the event data recorder (EDR) system, this vehicle records and accumulates data when the airbag is deployed.

Front airbags

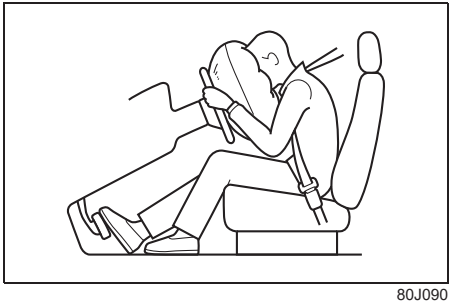

80J090

Front airbags are designed to inflate in severe frontal collisions when the ignition switch is in “ON” position or the ignition mode is ON.

NOTE:
In a frontal angle collision, the side airbags (if equipped) and side curtain airbags (if equipped) may inflate.

Front airbags are not designed to inflate in rear impacts, side impacts, rollovers or minor frontal collisions, since they would offer no protection in those types of accidents. Since an airbag deploys only one time during an accident, seat belts are needed to restrain occupants from further movements during the accident.

Therefore, an airbag is not a substitute for seat belts. To maximize your protection, always fasten your seat belts. Be aware that no system can prevent all possible injuries that may occur in an accident.

Side airbags (if equipped) and side curtain airbags (if equipped)

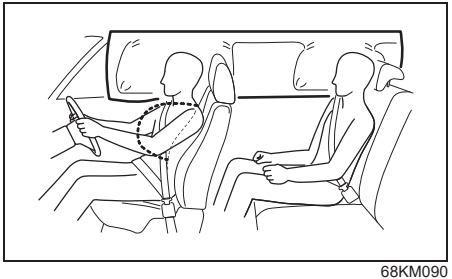

68KM090

Side airbags and side curtain airbags are designed to inflate in severe side impact collisions when the ignition mode is ON.

Side airbags and side curtain airbags are not designed to inflate in frontal or rear collisions, rollovers or minor side collisions, since they would offer no protection in those types of accidents. Only the side airbag and side curtain airbag on the side of the vehicle that is struck will inflate. However, in a frontal angle collision, the side airbags and side curtain airbags may inflate. Since an airbag deploys only one time during an accident, seat belts are needed to restrain occupants from further movements during the accident.
Therefore, an airbag is not a substitute for seat belts. To maximize your protection, always fasten your seat belts. Be aware that no system can prevent all possible injuries that may occur in an accident.

When Driving the Vehicle with SRS Airbag System

Make Sure to Fasten Seat Belt

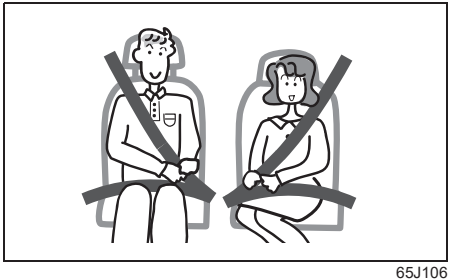

65J106

⚠ WARNING

SRS airbag system is not a substitute for seat belts. SRS airbag system is the supplemental restraint system and will provide the effectiveness by using the seat belts at the same time. If you and the passengers do not fasten their seat belts, it may result in severe injury in a sudden braking or a collision.
Even when you drive the vehicle equipped with SRS airbag system, make sure to fasten seat belt.

Correct Sitting Posture

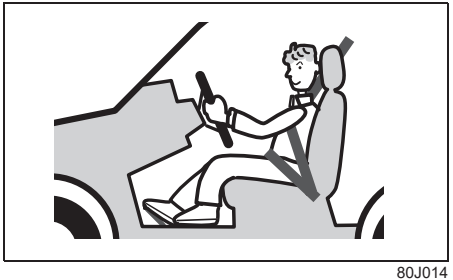

80J014

There is a possibility of major impact from the front airbags when the airbags activate and deploy instantaneously, the driver and the passenger should sit deeply into their seats and touch their backs lightly to the seatback. In addition, the seat should be positioned so that it is not too far forward.

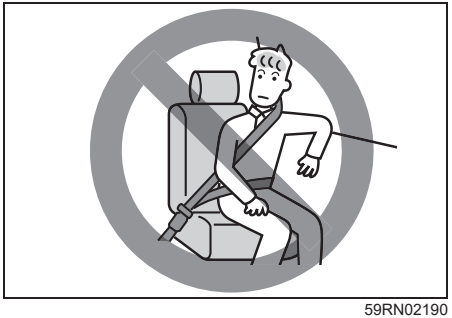

59RN02190

⚠ WARNING

- **Do not position your face, chest, etc., close to the steering wheel or instrument cluster, and do not rest your feet up into this area. Otherwise, there is the risk of serious injury due to major impact if the airbag were to be deployed.**
- **If side airbags (if equipped) or side curtain airbags (if equipped) activate, you may get strong impact, resulting in severe injury. Do not put hands out of the window or lean on the door. Also, when sitting in the rear seat, do not hug the seatback of the front seat.**

For Proper SRS Airbag System Operation

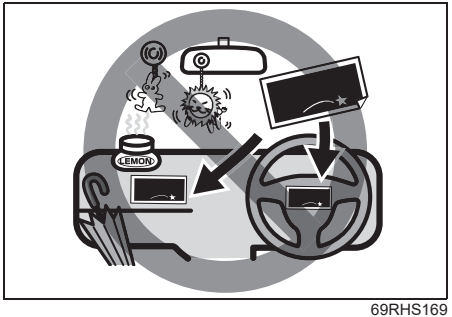

69RHS169

⚠ WARNING

- **Do not modify the steering wheel, such as replacing it, placing stickers on it, painting it or putting the cover on it.**
- **Do not place stickers on the airbag units or the surrounding areas or paint them. Also, do not attach any accessories, fragrances, electronic toll control units, portable car navigation systems, etc. to this area, and do not lean umbrellas or other objects against it.**
- **Do not attach accessories (except for Maruti Suzuki genuine products), etc., to the windshield or the inside rearview mirror.**

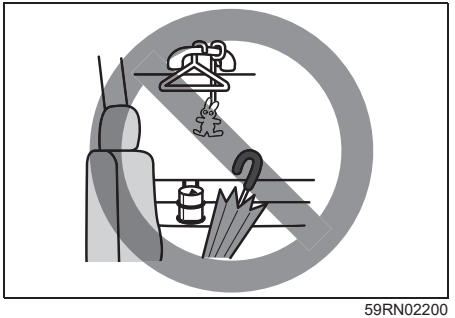

59RN02200

⚠ WARNING

For the vehicle with side airbags or side curtain airbags, do not attach accessories such as cup holders or hangers near the door. Also, do not lean umbrellas against the door.

Warning Label of SRS Airbag for Front Passenger's Seat

72M00150

You may find this label on the sun visor.

⚠ WARNING

NEVER use a rearward facing child restraint on a seat protected by an ACTIVE AIRBAG in front of it, DEATH or SERIOUS INJURY to the CHILD can occur.

Description of warning label

Symbol	Symbol meaning
	Do not install a rear-facing child restraint system to the front passenger's seat equipped with an airbag.
	If the front passenger's seat airbag were to be deployed, a major impact could be applied to a rear-facing child restraint system and the child.
	For more details, read this owner's manual.

"SRS AIRBAG" Mark and Location

Driver's front airbag

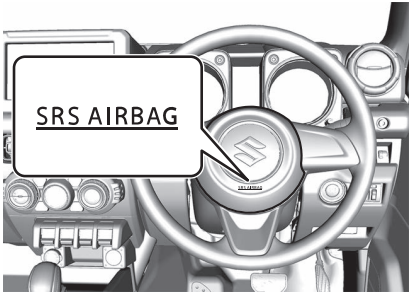

77R30400

Front passenger's front airbag

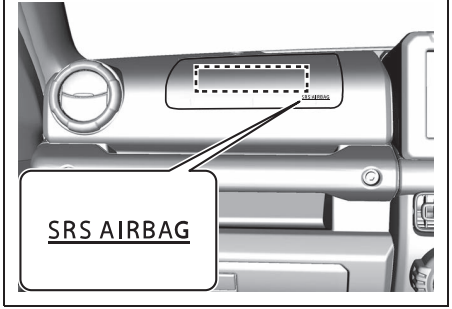

77R30410

Side airbags (if equipped)

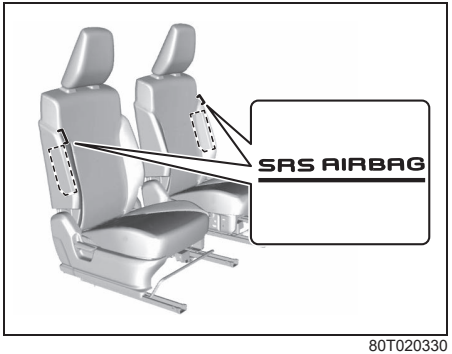

80T020330

Side curtain airbags (if equipped)

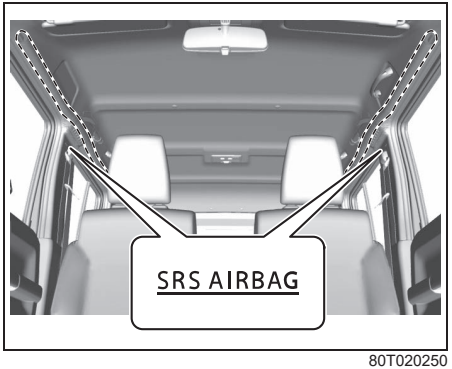

80T020250

The driver's front airbag is located behind the center pad of the steering wheel and the front passenger's front airbag is located behind the passenger's side of the dashboard.
Side airbags are located in the part of the front seatbacks closest to the doors.
Side curtain airbags are located in the roof lining.
The words "SRS AIRBAG" are molded into the airbag covers to identify the location of the airbags.

⚠ WARNING

- **If the airbag stored place is damaged or cracked, the airbag system may not work properly, which could result in serious injury in the event of a collision. Have your vehicle inspected by Maruti Suzuki authorized workshop.**
- **If you smash the airbag stored place or apply a strong impact to it, the airbag may not work properly or may inflate unexpectedly, resulting in serious injury.**
  Do not smash the airbag stored place or apply a strong impact to it.

Installation of Child Restraint System

⚠ WARNING

61M0241

Do not install a child restraint system on the front passenger's seat.

Refer to "Seat Belts and Child Restraint Systems" section for details on securing your child.

Handling for Airbags

For Proper SRS Airbag System Operation

If objects are positioned within the range where the airbag deploys, such objects might be impacted and blown off or the airbag may not deploy properly.

⚠ WARNING

- **As the airbag may not provide the best performance and it may result in severe injury in case of emergency, observe the following points.**
  - **Do not modify the suspension. If the vehicle height or the stiffness of the suspension were to change, airbag malfunction may result.**
  - **When installing a grille guard, etc., on the front of the vehicle, consult with a Maruti Suzuki authorized workshop. If you modify the front part of the vehicle, the airbag system may not work properly.**
  - **When installing radio equipment, etc., consult with a Maruti Suzuki authorized workshop. Radio waves, etc., from a radio may adversely affect the computer module used in the airbag system.**

(Continued)

⚠ WARNING

(Continued)

  - **Even though your vehicle is damaged by a collision, it may not be severe enough to trigger front, side or side curtain airbags to inflate. If your vehicle sustains any front-end or side damage, have the airbag system inspected by a Maruti Suzuki authorized workshop to ensure that it works properly. If the original function of airbag system is damaged, airbag may not function effectively and fully in case of an emergency.**

- **If the airbag-related parts are replaced or repaired, which has an impact on the airbag functions, the airbag may activate unnecessarily or may not activate when necessary.**
  The following situations may give a negative impact to the airbag system. In these cases, consult with a Maruti Suzuki authorized workshop beforehand.
  - **Removing the steering wheel, repairing the areas around the steering wheel, etc.**

(Continued)

⚠ WARNING

(Continued)

  - **Center console repair, repairs around the instrument cluster, repairs under the front seat, and repairs of electrical wiring**
  - **Installation of audio equipment, etc.**
  - **Sheet metal painting and repairs around the dashboard**
  - **Replacement of the front seat and repairs around the seat**
  - **Repairs around the front pillar, the back pillar or the roof side**
  - **Repairs around the center pillar**

Driver's front airbag precautions

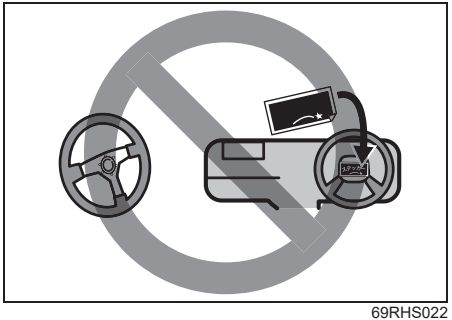

69RHS022

⚠ WARNING

- **Do not position your hands, face, chest, etc., close to airbag unit area or lean on the steering wheel. Otherwise, there is the risk of serious injury due to major impact if the airbag were to be deployed.**
- **Do not modify the steering wheel, such as replacing it, placing stickers on it, painting it or putting the cover on it. Otherwise, the airbag may not deploy normally in case of emergency, resulting in severe injury.**

Front passenger's front airbag precautions

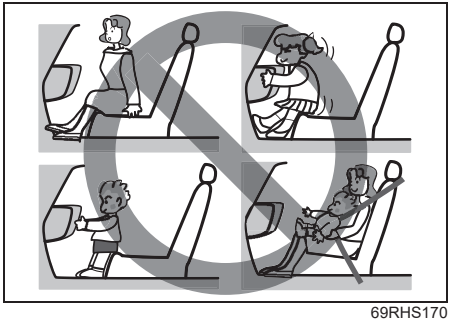

69RHS170

⚠ WARNING

- **When riding in the front passenger's seat or when allowing a child to ride in this seat, be sure to observe the following points. Failure to do so may result in serious injury due to major impact if the airbag is deployed.**
  - **Do not position your hands or feet on the airbag unit area, and do not position your face, chest, etc., close to this area.**
  - **Do not allow a child to stand in front of the airbag unit area or sit on a passenger's lap in the front passenger's seat. Have a child ride in the rear seat wearing a seat belt.**

(Continued)

⚠ WARNING

(Continued)

- **For a child that is not yet big enough to wear a seat belt properly, be sure to use a child restraint system on the rear seat.**

69RHS171

⚠ WARNING

- **As the airbag may not provide the best performance and it may result in severe injury in case of emergency, observe the following points.**
  - **Do not place stickers on the airbag units or the surrounding areas or paint them. Also, do not attach any accessories, fragrances, electronic toll control units, portable car navigation systems, etc. to this area, and do not lean umbrellas or other objects against it.**
  - **Do not attach accessories (except for Maruti Suzuki genuine products), etc., to the windshield or the inside rearview mirror.**

Side airbags (if equipped) and side curtain airbags (if equipped) precautions

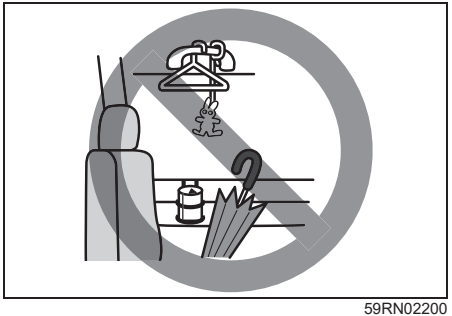

59RN02200

⚠ WARNING

If you attach accessories such as cup holders or hangers near the door, or if you lean umbrellas against the door, when side airbags or side curtain airbags activate, these objects may be thrown out and may not inflate properly, resulting in severe injury.
Do not attach accessories such as cup holders or hangers near the door. Also, do not lean umbrellas against the door.

Function of Airbags

How the System Works

In a frontal collision, the collision sensors will detect rapid deceleration, and if the controller judges that the deceleration represents a severe frontal collision, the controller will trigger the inflators. The inflators inflate the appropriate airbags with nitrogen or argon gas. The inflated airbags provide a cushion for your head and upper body. The airbag inflates and deflates so quickly that you may not even realize that it has activated. The airbag will neither hinder your view nor make it harder to exit the vehicle.
A seat belt helps keep you in the proper position for maximum protection when an airbag inflates. Adjust your seat as far back as possible while still maintaining control of the vehicle. Sit fully back in your seat; sit up straight; do not lean over the steering wheel or dashboard. Front occupants should not lean on or sleep against the door. Refer to “Seat Adjustment” section and “Seat Belts and Child Restraint Systems” section in this section for details on proper seat and seat belt adjustments.

80T020350

59RN04670

59RN02360

⚠ WARNING

- **The driver should not lean over the steering wheel. The front passenger should not rest his or her body against the dashboard where a front air bag is mounted or a child should not stand in front of the dashboard. Otherwise, he or she will get too close to the dashboard. For vehicles with side air bags and side curtain air bag, occupants should not lean on or sleep against the door. In these situations, the out-of-position occupant would be too close to an inflating airbag, and may suffer severe injury.**

(Continued)

⚠ WARNING

(Continued)

- **Do not attach any objects to, or place any objects over, the steering wheel or dashboard. Do not place any objects between the airbag and the driver or front passenger. These objects may interfere with airbag operation or may be propelled by the airbag in the event of a collision. Also, these objects may move when you start moving vehicle or while vehicle is moving, they may interfere with driver's view or safe driving. In each condition, it may cause severe injury.**
- **For vehicles with side airbags, do not use non-genuine seat covers on the front seats, because non-genuine seat covers may obstruct the inflation of side airbags. Maruti Suzuki highly recommends Maruti Suzuki-genuine seat covers to be used when covering the front seats of such vehicles with side airbags. Also, near the door, do not place cup holders, hangers or any other objects and do not lean an umbrella, as these objects could be propelled by the airbag in the event of a collision. Either of these conditions may cause severe injury.**

(Continued)

⚠ WARNING

(Continued)

- **Do not strike or apply significant levels of impact to the airbag component areas. It can cause the airbags to malfunction.**
- **Even though your vehicle is damaged by a collision, it may not be severe enough to trigger front, side or side curtain airbags to inflate. If your vehicle sustains any front-end or side damage, have the airbag system inspected by Maruti Suzuki authorized workshop to ensure that it works properly. If the original function of air bag system is damaged, air bag may not function effectively and fully in case of an emergency.**

⚠ CAUTION

Airbags must inflate quickly and forcefully in order to reduce the chance of serious or fatal injuries. However, an unavoidable consequence of the quick inflation is that the airbag may irritate bare skin, such as the facial area against a front airbag. Wash off any residue as soon as possible to prevent skin irritation. Also, upon inflation, a loud noise will occur and some powder and smoke will be released. These conditions are not harmful and do not indicate a fire in the vehicle. Be aware, however, that some airbag components may be hot for a while after inflation.
This may cause burn injury.

Your vehicle is equipped with a diagnostic module which records information about the airbag system if the airbags deploy in a collision. The module records information about overall system status, and which sensors activated the deployment.

Servicing the airbag system

If the airbags inflate, have the airbags and related components replaced by Maruti Suzuki authorized workshop as soon as possible.

If your vehicle ever gets in deep water and the driver's floor is submerged, the airbag controller could be damaged. If this happens, ask your Maruti Suzuki authorized workshop to check the airbag system as soon as possible.

Special procedures are required for servicing or replacing an airbag. For that reason, only Maruti Suzuki authorized workshop should be allowed to service or replace your airbags. Remind anyone who services your Maruti Suzuki vehicle that it has airbags.

Service on or around airbag components or wiring must be performed only by Maruti Suzuki authorized workshop. Improper service could result in unintended airbag deployment or could render the airbag inoperative. Either of these two conditions may result in severe injury.

To prevent damage or unintended inflation of the airbag system, check that the battery is disconnected and the ignition switch has been in "LOCK" position or the ignition mode has been in LOCK (OFF) for at least 90 seconds before performing any electrical service work on your Maruti Suzuki vehicle. Do not touch airbag system components or wires. The wires are wrapped with yellow tape or yellow tubing, and the couplers are yellow for easy identification.

⚠ CAUTION

If you do not handle the airbags properly, they may inflate unexpectedly, resulting in personal injury.
When scrapping the airbags or the vehicle that has the airbags, consult with a Maruti Suzuki authorized workshop.

Front Airbag Deployment Conditions

Front airbags deploy (inflation)

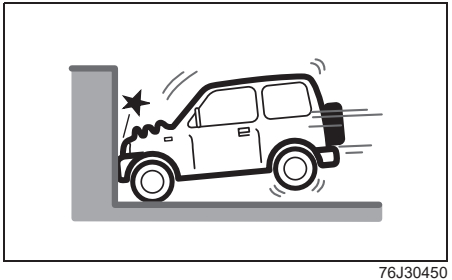

76J30450

- Frontal collision with a fixed wall that does not move or deform at more than about 25 km/h

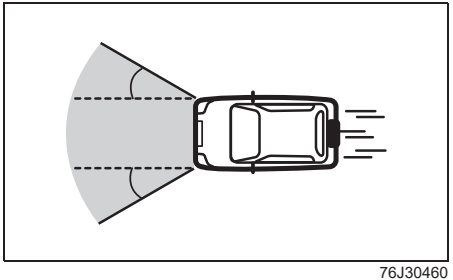

76J30460

- Strong impact equivalent to frontal collision such as above at left and right angles of about 30 degrees (1) or less from the front of your vehicle

Front airbags may inflate
Receiving a strong impact to the lower body of your vehicle, the front airbags may inflate.

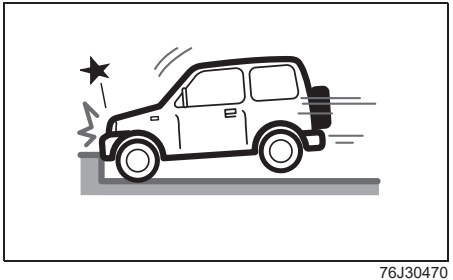

76J30470

- Hitting a curb or medial strip

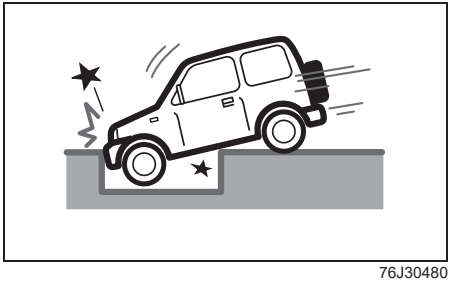

76J30480

- Falling into a deep hole or ditch

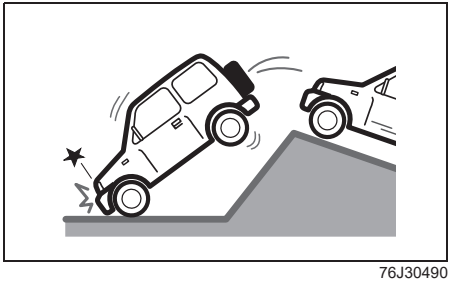

76J30490

- Landing hard or falling

Front airbags may not inflate

The front airbags may not inflate when a strong impact has not occurred since the collision object (including living beings like animals) was easy to be deformed or moved, or the crashed portion of your vehicle was easy to be deformed.

Also, front airbags may not inflate in many cases when the collision angle is greater than about 30 degrees at left and right angles from the front of your vehicle. Also, in certain collisions at low speed, the airbag may not inflate.

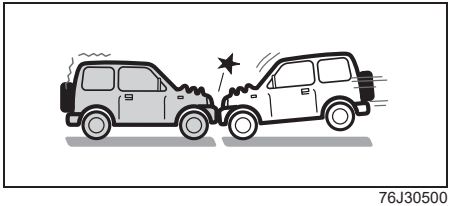

76J30500

- Frontal collision to a stopped vehicle at less than about 50 km/h

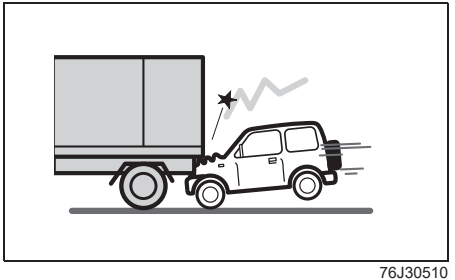

76J30510

- Collision that the front of your vehicle goes under the bed of a truck etc.

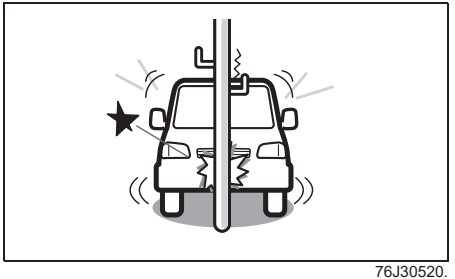

76J30520.

- Collision with a utility pole or stumpage

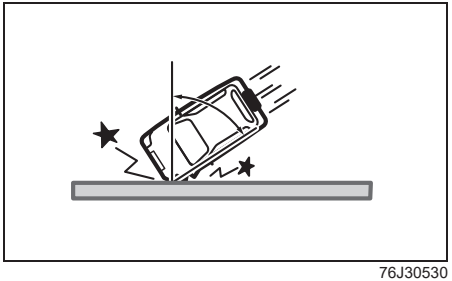

76J30530

- Collision with a fixed wall or guardrail at left and right angles of greater than about 30 degrees (1) from the front of your vehicle

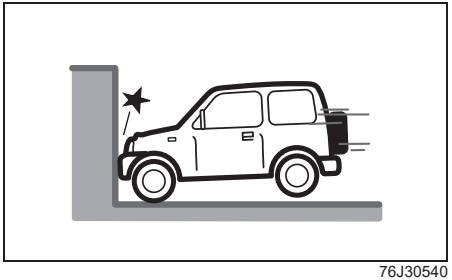

76J30540

- Frontal collision with a fixed wall that does not move or deform at less than about 25 km/h

Front airbags do not inflate

Front airbags do not inflate in rear impacts, side impacts or rollovers, etc. However, these might inflate in a strong impact.

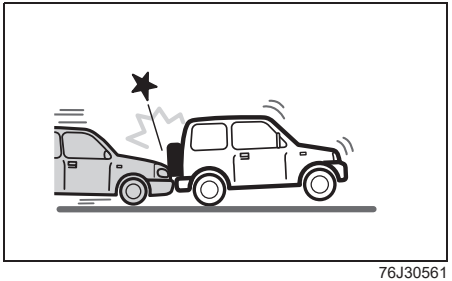

76J30561

- Impact from the rear

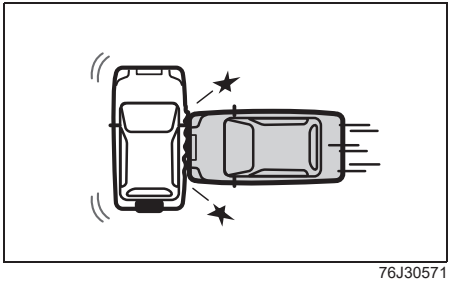

76J30571

- Impact from the side

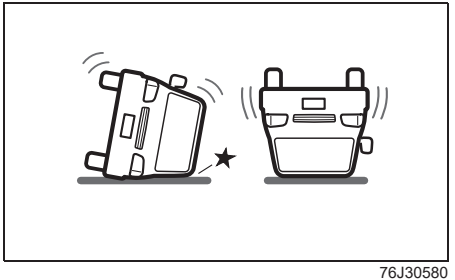

76J30580

- Vehicle rollover

Side Airbags (if equipped) and Side Curtain Airbags (if equipped) Deployment Conditions

Side airbags and side curtain airbags deploy (inflation)

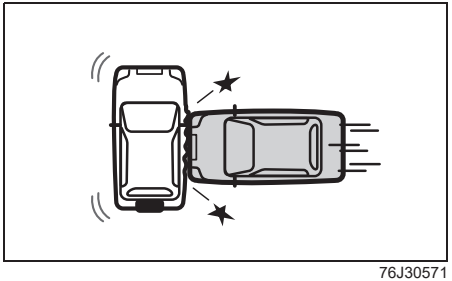

76J30571

- Impacts from the side at about a right angle by a general passenger car to your vehicle at more than about 30 km/h or in a greater impact

Side airbags and side curtain airbags may inflate in a strong impact

Side airbags and side curtain airbags may inflate even in a frontal collision, if there is a strong impact to the lateral direction.

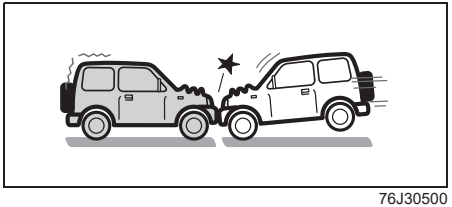

76J30500

- Frontal collision

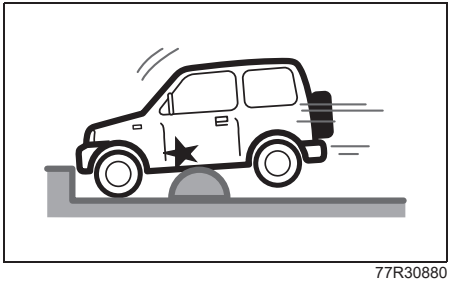

77R30880

- Hitting a curb or bump

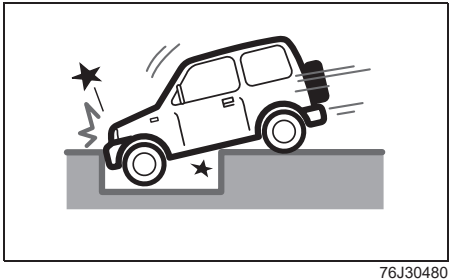

76J30480

- Falling into a deep hole or ditch

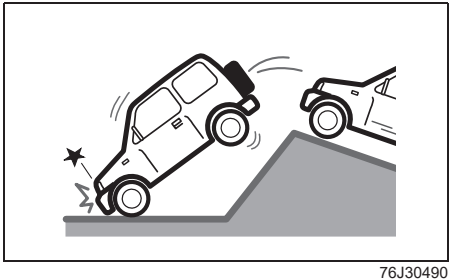

76J30490

- Landing hard or falling

Side airbags and side curtain airbags may not inflate

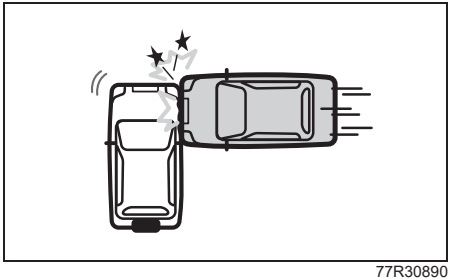

77R30890

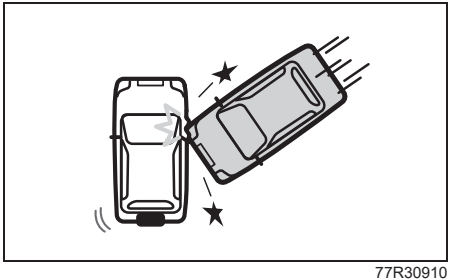

77R30910

- Impact from the side at an oblique angle

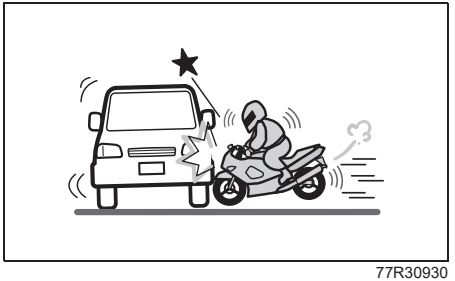

77R30930

- Impact from the side by a motorcycle or bicycle

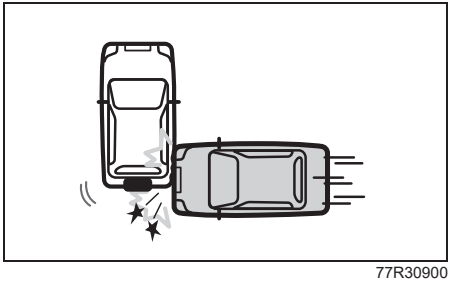

77R30900

- Impact from the side to the vehicle body other than the passenger compartment

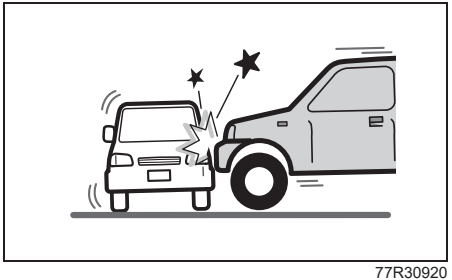

77R30920

- Impact from the side by a high hood vehicle

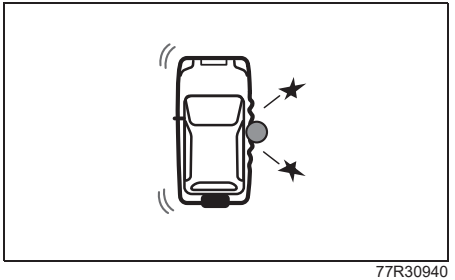

77R30940

- Collision with a utility pole or stumpage

Side airbags and side curtain airbags do not inflate

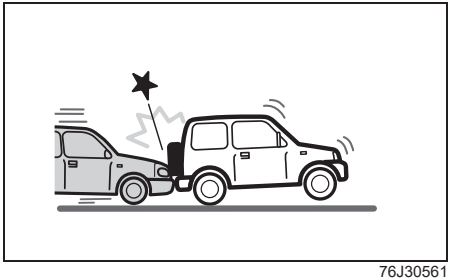

76J30561

- Impact from the rear

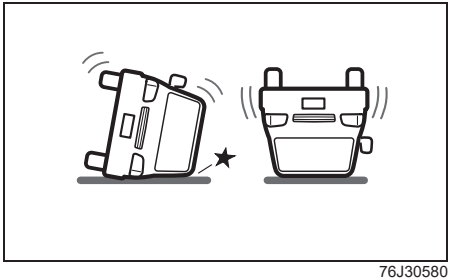

76J30580

- Vehicle rollover

When Starting the Engine

Be Careful of Carbon Monoxide Poisoning

⚠ WARNING

Exhaust gases contain carbon monoxide, a potentially lethal gas that is colorless and odorless. If you breath exhaust gases, you may feel drowsy, resulting in severe health problems or death in the worst case.
If you start the engine, be careful of carbon monoxide poisoning.

Do not Run Engine in a Poorly-ventilated Area

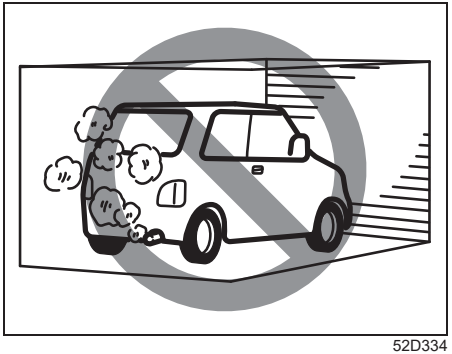

52D334

⚠ WARNING

Avoid breathing exhaust gases. Exhaust gases contain carbon monoxide, a potentially lethal gas that is colorless and odorless. Since carbon monoxide is difficult to detect by itself, take the following precautions to help prevent carbon monoxide from entering your vehicle.
Otherwise, it may result in severe health problems or death in the worst case.

- **Do not leave the engine running in garages or confined areas, with passengers inside. This may result in accumulation of carbon monoxide in cabin and may lead to suffocation or breathing problem and lead to death.**
- **Do not park with the engine running for a long period of time, even in an open area. In case of long periods, danger of choking and death on being inside the vehicle is a possibility when the engine is running. If it is necessary to sit for a short time in a parked vehicle with the engine running, check that the air intake selector is set to “FRESH AIR” and the blower is at high speed.**

(Continued)

⚠ WARNING

(Continued)

- **Avoid operating the vehicle with the tailgate or trunk open. If it is necessary to do so, check that the all windows are closed, and the blower is at high speed with the air intake selector set to "FRESH AIR".**
- **To allow proper operation of your vehicle's ventilation system, keep the air inlet grill in front of the windshield clear of snow, leaves or other obstructions at all times.**
- **Keep the exhaust tailpipe area clear of snow and other material to help reduce the buildup of exhaust gases under the vehicle. This is particularly important when parked in blizzard conditions.**
- **Have the exhaust system inspected periodically for damage and leakage. Any damage or leakage should be repaired immediately.**

Do not Take a Nap with Engine Running

69RHS172

⚠ WARNING

Do not take a nap with the engine running. Otherwise, it may result in an accident, severe health problems or death in the worst case.

- **Exhaust gases can enter the vehicle due to surrounding conditions and wind direction, possibly causing carbon monoxide poisoning.**
- **The gearshift lever could change unintentionally, or the accelerator pedal could be depressed accidentally, causing an accident.**
- **If you were to accidentally step on the accelerator pedal while asleep, the engine and exhaust system could overheat, resulting in danger of fire.**

When Loading the Luggage

Loading too much luggage in the vehicle may have negative effects to the vehicle body or driving performance.

⚠ WARNING

59RN02230

- **Fuel, chemical containers, spray cans etc. may catch a fire or cause an explosion.**
  Do not bring these objects into the vehicle.

(Continued)

⚠ WARNING

(Continued)

59RN02240

- **If you place any objects on the instrument panel, these objects may move and interfere with driver's view or safe driving. Also, the front passenger's front airbag may not work properly or these objects may be thrown out when the airbag inflates in an accident.**
  Do not place any objects on the instrument panel.

59RN07290

⚠ CAUTION

- **If you hang any objects on the gearshift lever or use it as a handrest, the gearshift lever may not work properly, resulting in a malfunction or an accident.**
  Do not hang any objects on the gearshift lever or use it as a handrest.
- **If you pile up luggage, it may interfere with driver's view. Also, in a sudden braking, the luggage would jump out and it may result in an accident.**
  Do not pile up luggage in the vehicle.
- **If animals move about in the vehicle, it may interfere with driver's view. Also, in a sudden braking, it may result in an accident.**
  When you bring animals into the vehicle, make sure that animals do not move about.

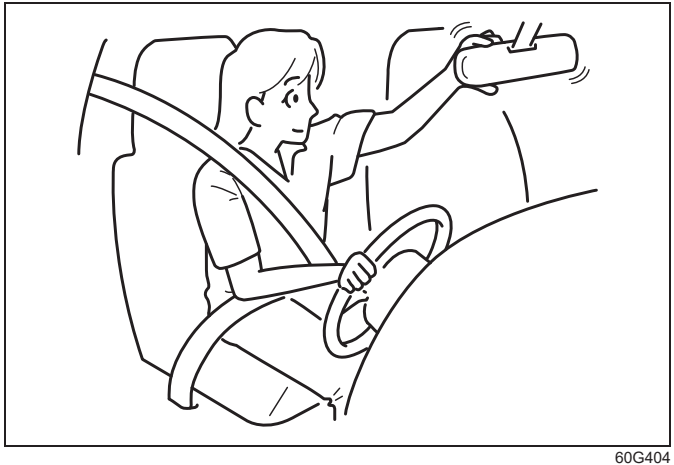

60G404

BEFORE DRIVING

Keys 3-1
Doors 3-1
Keyless Entry System Transmitter /
Keyless Push Start System Remote Controller 3-6
Security System 3-16
Windows 3-18
Lighting Control Lever 3-21
Headlight Leveling Switch 3-24
Headlight Washer Switch (if equipped) 3-25
Turn Signal Control Lever 3-25
Hazard Warning Switch 3-26
Windshield Wiper and Washer Lever 3-27
Horn 3-30
Heated Rear Window Switch 3-30

Keys

Your vehicle comes with a pair of identical keys. Keep one of the keys as a spare key in a safe place. One key can open all of the locks on the vehicle.

Key Number Plate

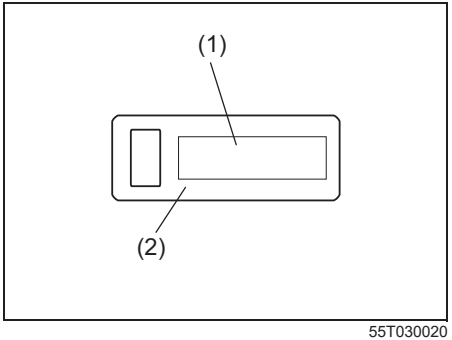

55T030020

The key identification number (1) is stamped on a metal tag (2) provided with the keys. Keep the tag in a safe place. If you lose your keys, you will need this number to have new keys made. Write the number below for your future reference.

KEY NUMBER:

NOTE:

- *Carefully keep the tag in the place other than your vehicle, so that someone does not find out about the key identification number. If you lose your key, inform the key identification number to a Maruti Suzuki authorized workshop*
- *When you resell or transfer your vehicle to a new owner or operator, give the key number plate with your vehicle to him or her.*

Immobilizer System

For detail of immobilizer system, “Immobilizer System” in the “OPERATING YOUR VEHICLE” section

Doors

⚠ WARNING

- **When a seat belt or luggage is caught by a door, the door cannot be shut properly and it may open while driving. This may cause an accident. Close a door not to catch a seat belt or luggage in the door.**
- **When you keep the tailgate open with the engine running, exhaust gases will enter the vehicle and cause carbon monoxide poisoning. This may cause severe health problems or death in the worst case. Do not keep the tailgate open with the engine running.**
- **To prevent fire or theft, stop the engine and lock the doors when leaving the vehicle.**
- **When opening a door, be careful of the surrounding area. An accident, such as a collision with the vehicle or a pedestrian behind your vehicle, may occur. Be very careful when opening a door especially on a windy day.**

⚠ CAUTION

- **When a child opens or closes a door, his / her hands, legs or head may be caught in the door and this may cause injury. Opening or closing a door should be performed not by a child but by an adult.**
- **When the tailgate is not fully opened, it may be unexpectedly closed and this may cause injury. When opening the tailgate, open it fully.**
- **Opening the tailgate right behind the exhaust pipes may cause burn injury. With the engine running, do not open the tailgate right behind the exhaust pipes.**

NOTICE

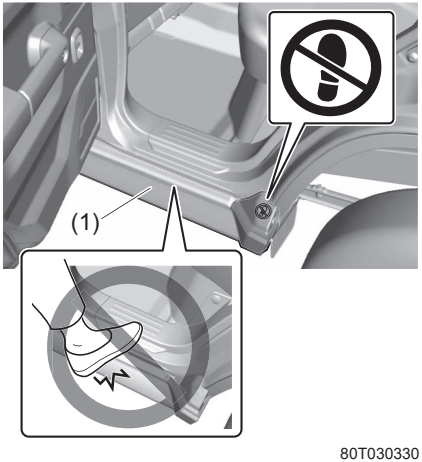

80T030330

Do not put your foot on the side sill splash guard (1).
This might cause it to damage.

NOTE:
- *When leaving the vehicle even for a short period of time, do not leave cash or valuables in the vehicle, to avoid risk of theft.*
- *Depending on the setting conditions of the security alarm and the opening conditions of the doors, an alarm may operate. Refer to "Security System" in this section.*

Side Door Locks

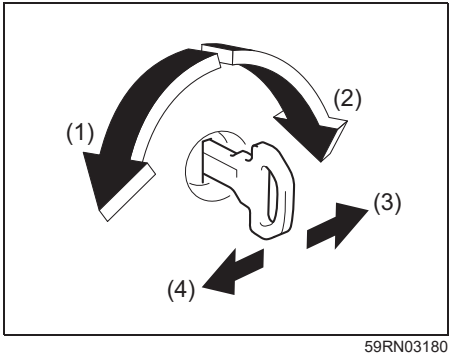

59RN03180

(1) UNLOCK
(2) LOCK
(3) Front
(4) Rear

To lock a front door from outside the vehicle:

- Insert the key and turn the top of the key toward the front of the vehicle, or
- Turn the lock knob forward, then pull and hold the door handle as you close the door.

To unlock a front door from outside the vehicle, insert the key and turn the top of the key toward the rear of the vehicle.

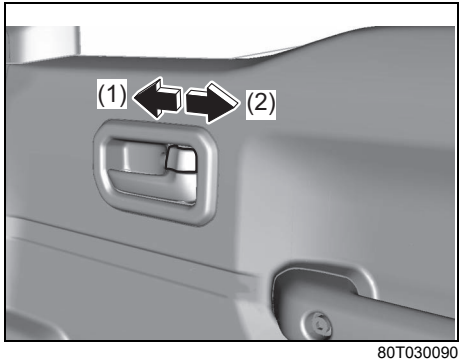

80T030090

(1) LOCK
(2) UNLOCK

To lock a door from inside the vehicle, turn the lock knob forward. Turn the lock knob rearward to unlock the door.

To lock a rear door from outside the vehicle, turn the lock knob forward and close the door. You do not need to pull and hold the door handle as you close the door.

NOTE:
Be sure to hold the door handle when you close a locked front door, or the door will not remain locked.

Central Door Locking System

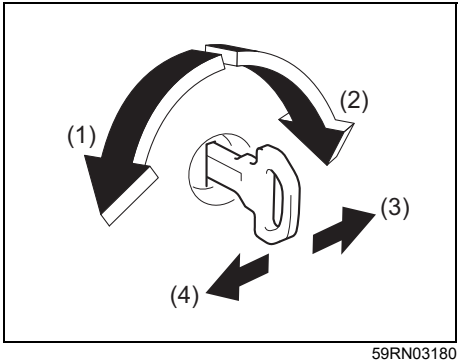

59RN03180

(1) UNLOCK
(2) LOCK
(3) Front
(4) Rear

You can lock and unlock all doors (including the tailgate) simultaneously by using the key in the driver's door lock.

To lock all doors simultaneously, insert the key in the driver's door lock and turn the top of the key toward the front of the vehicle.

To unlock all doors simultaneously, insert the key in the driver's door lock and turn the top of the key toward the rear of the vehicle.

Child-proof Locks (rear door)

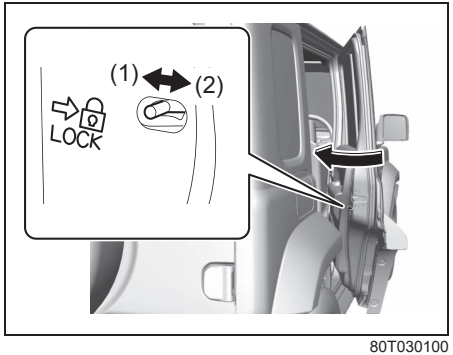

80T030100

(1) UNLOCK
(2) LOCK

Each of the rear doors is equipped with a child-proof lock which can be used to help prevent unwanted opening of the door from inside the vehicle. When the lock lever is in the lock position (2), the rear door can only be opened from outside. When the lock lever is in the unlock position (1), the rear door can be opened from inside or outside.

⚠ WARNING

Be sure to place the child-proof lock in the lock position whenever children are seated in the rear.

NOTE:
When you open a door from inside, put your hand out of the window and use the door handle.

Tailgate

⚠ WARNING

Always check that the tailgate is closed and latched securely. Completely closing the tailgate helps prevent occupants from being thrown from the vehicle in the event of an accident. Completely closing it also helps keep exhaust gases from entering the vehicle.

⚠ CAUTION

If you unlock the tailgate, pull up the tailgate handle and pull the tailgate, it will continue to open to the fully-open position by the damper stay performance. Check that no obstacle exists within the opening and closing range of the tailgate.

Locking and unlocking from outside the vehicle

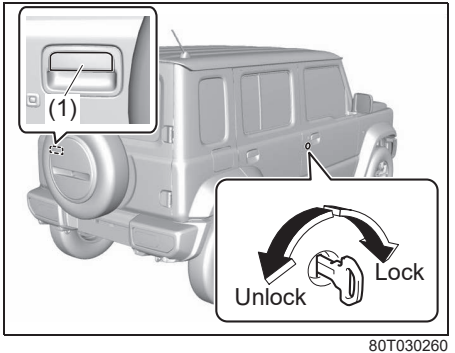

80T030260

(1) Tailgate handle

You can lock and unlock the tailgate by using the key in the driver's door lock.

To open the tailgate, pull up the tailgate handle (1) and pull the tailgate.

Unlocking from inside the vehicle

If you cannot unlock the tailgate by using the key in the driver's door lock due to a discharged lead-acid battery or malfunction, follow the procedure below to unlatch the tailgate from inside the vehicle.

1) Fold the rear seat forward for easier access. Refer to "Folding Rear seats" in "FOR SAFE DRIVING" section for details on how to fold the rear seat forward.

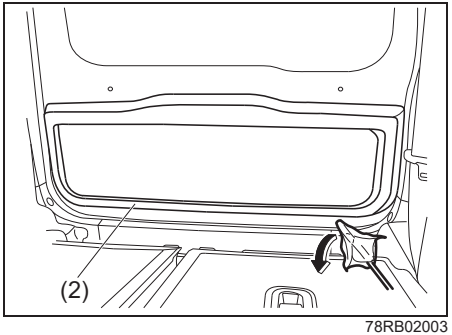

78RB02003

2) Remove the trim (2) of the tailgate.
   - Insert a flat-bladed screwdriver covered with a soft cloth between the trim and the tailgate to make a space for fingers, and then pull out the trim with your fingers.

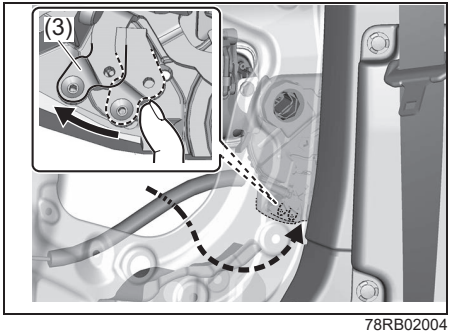

78RB02004

3) Move the lever (3) in arrow direction to unlock the tailgate.

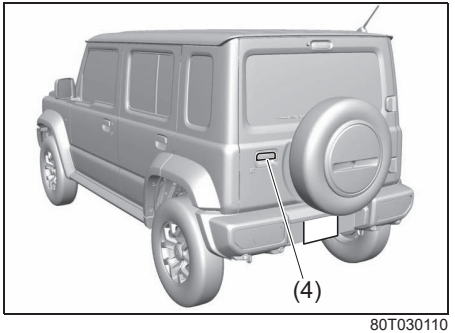

80T030110

4) From outside the vehicle, pull up the tailgate handle (4) and open the tailgate.

If the tailgate cannot be unlatched by pulling up the tailgate handle, have the vehicle inspected by a Maruti Suzuki authorized workshop.

⚠ CAUTION

Check that there is no one near the tailgate when pushing open the tailgate from inside the vehicle.

Keyless Entry System Transmitter / Keyless Push Start System Remote Controller

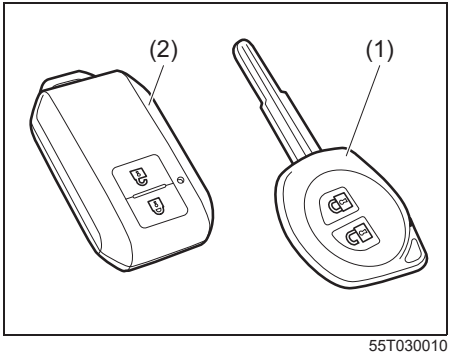

55T030010

Your vehicle is equipped with either a keyless entry system transmitter (1) or a keyless push start system remote controller (2). The transmitter has only a keyless entry system. The remote controller has a keyless entry system and a keyless push start system. For details, refer to the following explanations.

⚠ WARNING

Radio waves from the keyless push start system antenna(s) may interfere with operation of electrical medical equipment such as pacemakers. Failure to take the precautions listed below can increase the risk of severe injury or death due to radio wave interference.

- **Anyone who uses electrical medical equipment such as a pacemaker should consult the medical equipment supplier or their medical advisor about whether radio waves from the antenna(s) can interfere with the medical equipment.**
- **If radio wave interference is a concern, have the function of the antenna(s) disabled by a Maruti Suzuki authorized workshop.**

Keyless Entry System Transmitter (if equipped)

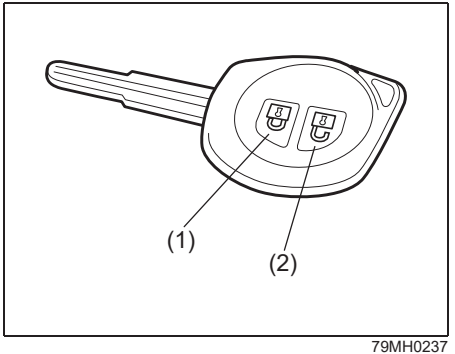

79MH0237

(1) LOCK button
(2) UNLOCK button

You can lock or unlock all doors (including the tailgate) simultaneously by operating the transmitter near the vehicle.

Central door locking system

- To lock all doors, push LOCK button (1) once.
- To unlock all doors, push UNLOCK button (2) once.

The turn signal lights will flash once and the siren will sound once (if equipped) when the doors are locked.

When the doors are unlocked:

- The turn signal lights will flash twice and the siren will sound twice (if equipped).
- If the interior light switch is in DOOR position, the interior light will turn on for about 15 seconds and then fade out. If you insert the key into the ignition switch during this time, the light will start to fade out immediately.

Check that the doors are locked after you operate LOCK button (1).

NOTE:

- *If no door is opened within about 30 seconds after UNLOCK button (2) is operated, the doors will automatically lock again.*
- *If you lock the doors using the transmitter when the engine hood is open, the siren will sound 3 times to remind you (if equipped).*
- *If the security system was triggered due to an unauthorized entry into the vehicle and then you unlock the doors using the transmitter, the siren will sound 4 times to remind you. If this happens, check whether your vehicle has been broken into while you were away from it.*
- *Once you push both of the LOCK button (1) and UNLOCK button (2), then you push one of the buttons within 5 seconds, the siren will not sound (if equipped). However, push one of the buttons 5 seconds later, the siren will sound.*
- *You can set whether the siren sounds (if equipped) when locking or unlocking the door(s) via the setting mode of the information display. For details on how to use the information display, refer to "Information Display" in "INSTRUMENT CLUSTER" section.*
- *The maximum operating distance of the keyless entry system transmitter is about 5 m (16 ft.), but this can vary depending on the surroundings, especially near other transmitting devices such as radio towers or CB (Citizen's Band) radios.*
- *The door locks cannot be operated with the transmitter, if the ignition key is inserted in the ignition switch.*
- *When any door is open, the door locks can only be unlocked with the transmitter, and the turn signal light will not flash.*
- *If you lose one of the transmitters, ask your Maruti Suzuki authorized workshop as soon as possible for a replacement. Have your Maruti Suzuki authorized workshop for program the new transmitter code in your vehicle's memory so that the old code is erased.*

NOTICE

The transmitter is a sensitive electronic instrument. To avoid damaging the transmitter:

- **Do not expose it to impacts, moisture or high temperature such as by leaving it on the dashboard under direct sunlight.**
- **Keep the transmitter away from magnetic objects such as a television.**

Car locator function (if equipped)
This function helps in locating the vehicle.
Push both of the LOCK button (1) and UNLOCK button (2) for more than 3 seconds.
The turn signal lights will blink for about 27.5 seconds. Also, the siren will sound for about 27.5 seconds at the same time.
To cancel the car locator function, press any button (LOCK or UNLOCK).
You can also turn the ignition switch to the "ON" position or the press the engine switch to change the ignition mode to ON to cancel the car locator function.

NOTE:
The car locator function will not activate when the key is in the ignition switch.

Battery replacement
If the transmitter becomes unusable, replace the battery.

NOTE:
You may damage the transmitter when replacing its battery. Ask your Maruti Suzuki authorized workshop to inspect the system.

To replace the battery of the transmitter:

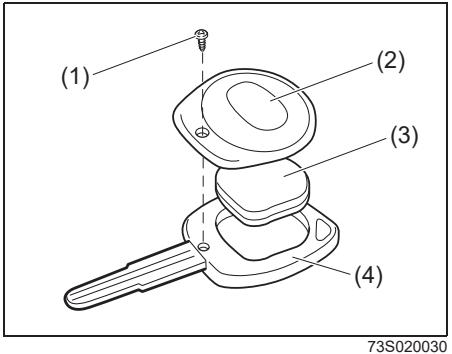

73S020030

1) Remove the screw (1), and open the transmitter cover (2).
2) Remove the transmitter (3) from the transmitter holder (4).

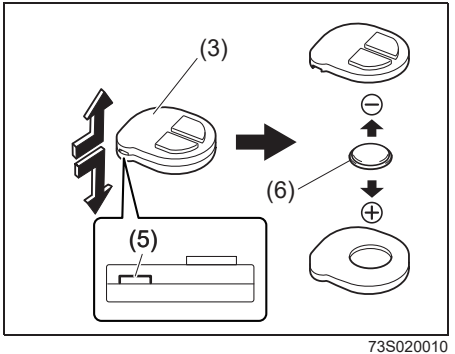

73S020010

(6) Lithium disc type battery: CR1616

3) Separate the case up and down while applying force to the slot (5) on the side of the transmitter (3).
4) Replace the battery (6) so its + terminal faces "+" mark of the transmitter.
5) Close the case and install it into the transmitter holder (4).
6) Close the transmitter cover (2), install and tighten the screw (1).
7) Check that the door locks can be operated with the transmitter.
8) Dispose of the used battery properly according to applicable rules or regulations. Do not dispose of lithium batteries with ordinary household trash.

⚠ WARNING

Swallowing a lithium battery may cause serious internal injury. Do not allow anyone to swallow a lithium battery. Keep lithium batteries away from children and pets. If swallowed, contact a physician immediately.

NOTICE

- **The transmitter is a sensitive electronic instrument. To avoid damaging it, do not expose it to dust or moisture or tamper with internal parts.**
- **When replacing the battery by yourself, the transmitter controller could be damaged affected by static electricity. Discharge the static electricity built up in your body by touching metal before replacing the battery.**

NOTE:
Used batteries must be disposed of properly according to applicable rules or regulations and must not be disposed of with ordinary household trash.

80JM133

(1) Crossed-out wheeled bin symbol

The crossed-out wheeled bin symbol (1) indicates that a used battery should be collected separately from ordinary household trash.

By ensuring the used battery is disposed of or recycled correctly, you will help prevent potential negative consequences for the environment and human health, which could otherwise be caused by inappropriate battery disposal. The recycling of materials will help to conserve natural resources. For more detailed information about disposing of or recycling of the used battery, consult with a Maruti Suzuki authorized workshop.
Be careful not to lose your key and to leave it in the locked vehicle.

⚠ WARNING

When you take the remote controller in an airplane, do not press the lock button or the unlock button. When you put the remote controller in a bag, place it so that either of these buttons is not pressed easily. If either of these buttons is pressed, radio wave may interfere with operation of the airplane.
***The remote controller is an electronic device which has a restriction on its use in the airplane.**

Keyless Push Start System Remote Controller (if equipped)

The remote controller enables the following operations:

- You can lock or unlock the doors by operating LOCK/UNLOCK buttons on the remote controller. Refer to the explanation in this section.
- You can lock or unlock the doors by pushing the request switch. For details, refer to the explanation in this section.
- You can start the engine without using an ignition key. For details, refer to “Engine Switch (Vehicle with Keyless Push Start System) (if equipped)” in “OPERATING YOUR VEHICLE” section.

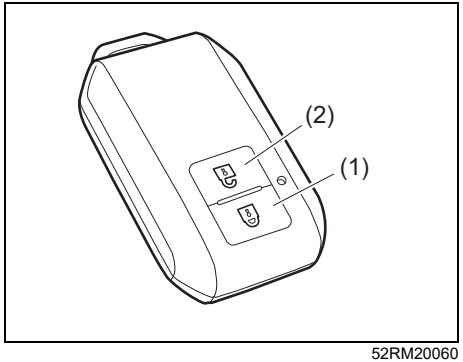

52RM20060

(1) LOCK button
(2) UNLOCK button

There are two ways to lock or unlock all doors (including the tailgate) simultaneously by operating the remote controller near the vehicle.

Central door locking system

- To lock all doors, push LOCK button (1) once.
- To unlock all doors, push UNLOCK button (2) once.

The turn signal lights will flash once and the siren will sound once (if equipped) when the doors are locked.

When the doors are unlocked:

- The turn signal lights will flash twice and the siren will sound twice (if equipped).
- If the interior light switch is in DOOR position, the interior light will turn on for about 15 seconds and then fade out. If you press the engine switch during this time, the light will start to fade out immediately.

Check that the doors are locked after you operate LOCK button (1).

NOTE:

- *If no door is opened within about 30 seconds after UNLOCK button (2) is operated, the doors will automatically lock again.*
- *The maximum operating distance of the remote controller is about 5 m (16.4 ft.), but this can vary depending on the surroundings, especially near other transmitting devices such as radio towers or CB (Citizen’s Band) radios.*
- *The door locks cannot be operated with the remote controller if the ignition mode is other than the “LOCK” (OFF).*
- *When any door is open, if you push LOCK button on the remote controller, the exterior buzzer will sound and doors cannot be locked.*
- *If you lose one of the remote controllers, ask your Maruti Suzuki authorized workshop as soon as possible for a replacement. Have your Maruti Suzuki authorized workshop for program the new remote controller code in your vehicle’s memory so that the old code is erased.*

Car locator function

This function helps in locating the vehicle.
Push both of LOCK button (1) and UNLOCK button (2) for more than 3 seconds. The turn signal lights will blink for about 27.5 seconds. Also, the siren will sound for about 27.5 seconds at the same time.
To cancel the car locator function, press any button (LOCK or UNLOCK).
You can also cancel the car locator function in any of the following operations.

- Press the engine switch to change the ignition mode to ON.
- Bring the remote controller with you and press the request switch.

NOTE:

- *The car locator function will not activate when the ignition mode is "ACC" or "ON".*
- *If you lock the doors using the remote controller when the engine hood are open, the siren will sound 3 times to remind you.*
- *If the security system was triggered due to an unauthorized entry into the vehicle and then you unlock the doors using the remote controller, the siren will sound 4 times to remind you. If this happens, check whether your vehicle has been broken into while you were away from it.*
- *Once you push both of LOCK button (1) and UNLOCK button (2), then you push one of the buttons within 5 seconds, the siren will not sound. However, push one of the buttons 5 seconds later, the siren will sound.*
- *You can set whether the siren sounds when locking or unlocking the door(s) via the setting mode of the information display.*
- *For details on how to use the information display, refer to "Information Display" in "INSTRUMENT CLUSTER" section.*
- *The maximum operating distance of the remote controller is about 5 m (16 ft.), but this can vary depending on the surroundings, especially near other transmitting devices such as radio towers or CB (Citizen's Band) radios.*
- *The door locks cannot be operated with the remote controller if the ignition mode is other than the LOCK (OFF).*
- *When any door is open, if you push LOCK button on the remote controller, the exterior buzzer will sound and doors cannot be locked.*
- *If you lose one of the remote controllers, ask your Maruti Suzuki authorized workshop as soon as possible for a replacement. Have your Maruti Suzuki authorized workshop for program the new remote controller code in your vehicle's memory so that the old code is erased.*

Keyless unlocking / locking using the request switches

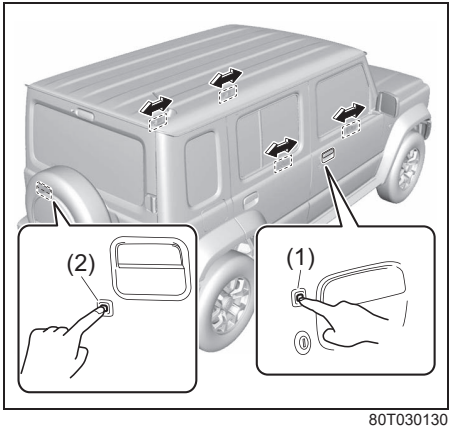

80T030130

When the remote controller is within the operating range described in this section, you can lock or unlock all the doors (including tailgate) by pushing the request switch (1) on the driver's door or front passenger's door or tailgate.

When all doors are unlocked:

- To lock all doors, push one of the request switches once.

The turn signal lights will flash once and the siren will sound once when the doors are locked.

To unlock all doors:
- To unlock all doors, push one of the request switches once.

When the doors are unlocked:
- The turn signal lights will flash twice and the exterior buzzer will sound twice.
- If the interior light switch is in DOOR position, the interior light will turn on for about 15 seconds and then fade out. If you press the engine switch during this time, the light will start to fade out immediately.

Check that the doors are locked after you operate the request switch to lock the doors.

NOTE:
- *The door locks cannot be operated by the request switch under the following conditions:*
  - *If any door is open or is not completely closed.*
  - *If the ignition mode is in any other mode than LOCK (OFF).*
- *If no doors are opened within about 30 seconds after unlocking the doors by pushing the request switch, the doors will be locked again automatically.*

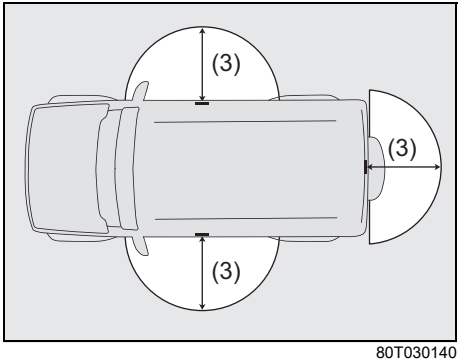

80T030140

(3) 80 cm (2.6 ft)

When the remote controller is within approximately 80 cm (2.6 ft) from a front door handle or the tailgate switch, you can lock or unlock the doors by pushing the request switch.

NOTE:
- *If the remote controller is outside the request switch operating range described above, you will not be able to operate the request switch.*
- *If the battery of the remote controller runs down or there are strong radio waves or noise, the request switch operating range may be reduced or the remote controller may be inoperative.*
- *If the remote controller is too close to the door glass, the request switches may not operate.*
- *If a spare remote controller is in the vehicle, the request switches may not operate normally.*
- *The remote controller will only operate a request switch if it is within the switch's operating range. For example, if the remote controller is within the operating range of the driver's door request switch but not the front passenger's door request switch or the tailgate request switch, the driver's door switch can be operated but the front passenger's door switch or tailgate switch cannot be operated.*

NOTICE

The remote controller is a sensitive electronic instrument. To avoid damaging the remote controller:
- **Do not expose it to impacts, moisture or high temperature such as by leaving it on the dashboard under direct sunlight.**
- **Keep the remote controller away from magnetic objects such as a television.**

NOTE:
The keyless push start system may not function correctly in certain environments or under certain operating conditions such as the following:
- *When there are strong signals coming from a television, power station or a cellular phone.*

- *When the remote controller is in contact with or covered by a metal object.*
- *When a radio wave type remote keyless entry is used nearby.*
- *When the remote controller is placed near an electronic device such as personal computer.*

Some additional precautions you should take and information you should be aware of are:

- *Check that the key is stowed in the remote controller. If the remote controller becomes unusable, you will not be able to lock or unlock the doors.*
- *Check that the driver always carries the remote controller.*
- *If you lose one of the remote controllers, ask your Maruti Suzuki authorized workshop as soon as possible for a replacement. Have your Maruti Suzuki authorized workshop for program the new remote controller code in your vehicle's memory so that the old code is erased.*
- *You can use up to four remote controllers and the keys for your vehicle. Ask your Maruti Suzuki authorized workshop for details.*
- *The battery life of the remote controller is about two years, but it can vary depending on usage conditions.*

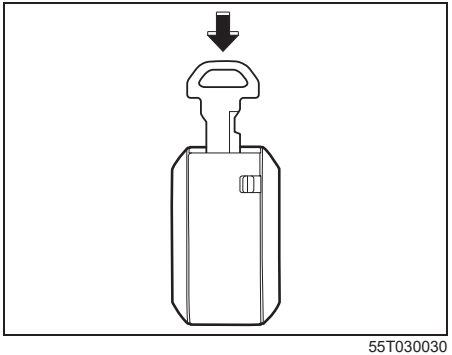

55T030030

To stow the key into the remote controller, push the key in the remote controller until you hear a click.

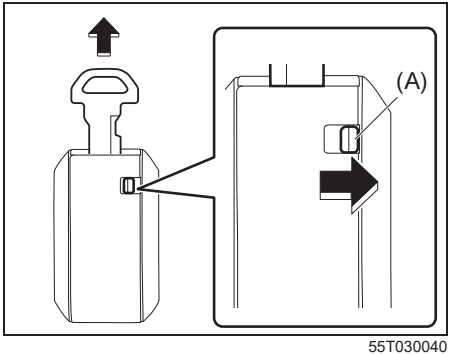

55T030040

To remove the key from the remote controller, slide the lock knob (A) in arrow direction and pull the key out from the remote controller.

Request switch warning buzzer

The exterior buzzer beeps for about 2 seconds in the following conditions to warn you that the request switch is not working:

- The request switch is pressed after all doors are closed with the ignition mode changed to ACC or ON position by pressing the engine switch when the remote controller is outside the vehicle.
- The request switch is pressed in any of the following conditions after changing the ignition mode to LOCK (OFF) by pressing the engine switch.
  - The remote controller is left inside the vehicle.
  - Any door (including the tailgate) is open.

Press the request switch again after doing the following:

With the ignition mode changed to LOCK (OFF) by pressing the engine switch, bring out the remote controller if it is inside the vehicle and check that all doors are completely closed.

Reminder function

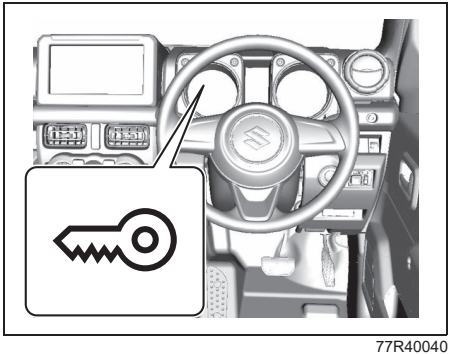

77R40040

If the remote controller is not in the vehicle under the following conditions, the buzzer sounds intermittently for about 2 seconds and the immobilizer/keyless push start system warning light on the instrument cluster blinks:
When one or more doors are opened and all of the doors are later closed with the ignition in any other mode than LOCK (OFF).

The indicator light will turn off within several seconds after the remote controller is returned to an area of the vehicle other than the rear luggage area.

If the remote controller is left in the vehicle and you lock the driver's door or front passenger's door as described below, the door will be automatically unlocked.

- If you open the driver's door and lock the door by turning the lock knob forward, the driver's door will be automatically unlocked.
- If you open the front passenger's door and lock the door by turning the lock knob forward, the front passenger's door will be automatically unlocked.

NOTE:

- *The reminder will not operate when the remote controller is on the instrument panel, in the glove box, in a storage compartment, in the sun visor or on the floor, etc.*
- *Check that the driver always carries the remote controller.*
- *Do not leave the remote controller in the vehicle when leaving the vehicle.*

Battery Replacement

⚠ WARNING

Swallowing a lithium battery may cause serious internal injury or death in the worst case. Do not allow anyone to swallow a lithium battery. Keep lithium batteries away from children and pets. If swallowed, contact a physician immediately.

NOTICE

- **The remote controller is a sensitive electronic instrument. To avoid damaging it, do not expose it to dust or moisture or tamper with internal parts.**
- **When you replace the battery by yourself, touch a metallic part and remove static electricity to prevent damaging the remote controller.**

NOTE:
- *Used batteries must be disposed of properly according to applicable rules or regulations and must not be disposed of with ordinary household trash.*
- *You may damage the remote controller when replacing its battery. Ask your Maruti Suzuki authorized workshop to inspect the system.*
- *When you purchase the battery by yourself at Maruti Suzuki authorized workshop, check the year of manufacture for the battery.*

If the remote controller becomes unreliable, replace the battery as follows:

NOTE:
You may damage the remote controller when replacing its battery. Ask your Maruti Suzuki authorized workshop for details.

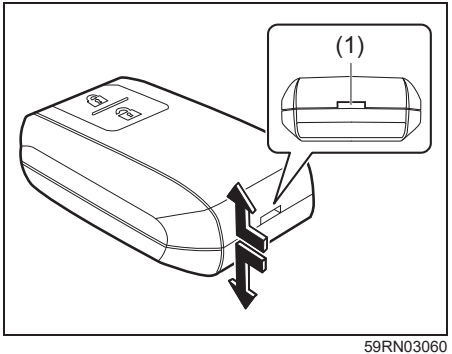

59RN03060

1) Pull the key out from the remote controller.
2) Separate the remote controller up and down while applying force to the slot (1) on the side of the remote controller.
3) Replace the old battery.

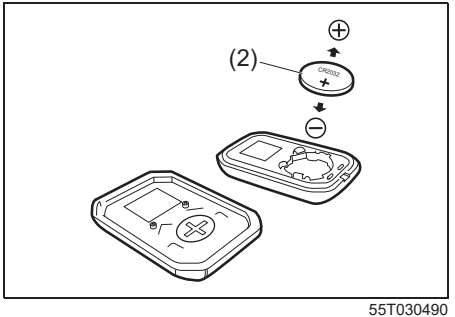

55T030490

(2) Lithium disc type battery: CR2032

4) Place the battery (2) so its + terminal faces up as shown in the illustration.
5) Close the remote controller firmly.
6) Make sure the door locks can be operated with the remote controller.
7) Dispose of the used battery properly according to applicable rules or regulations. Do not dispose of lithium batteries with ordinary household trash.

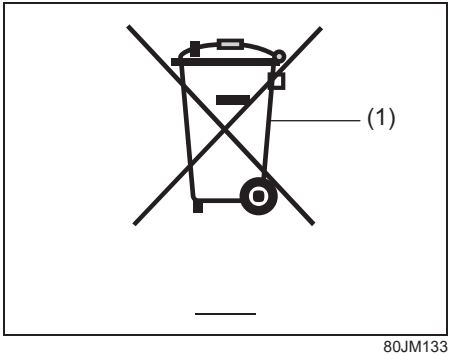

80JM133

(1) Crossed-out wheeled bin symbol

The crossed-out wheeled bin symbol (1) indicates that a used battery should be collected separately from ordinary household trash.

By ensuring the used battery is disposed of or recycled correctly, you will help prevent potential negative consequences for the environment and human health, which could otherwise be caused by inappropriate battery disposal. The recycling of materials will help to conserve natural resources. For more detailed information about disposing of or recycling of the used battery, consult with a Maruti Suzuki authorized workshop.

Security System

The security system is armed after you close and lock all doors (including engine hood and tailgate) by using the keyless entry system transmitter, keyless push start system remote controller or request switch.
Once the system is armed, any attempt to open a door by using any other means (*) than the keyless entry system transmitter, keyless push start system remote controller or request switch, or open the engine hood will cause the alarm to be triggered.

– The key
– The lock knob on a door

NOTE:

- *The security system generates alarms when any of the predetermined conditions is met. However, the system does not have any function of blocking unauthorized entry into the vehicle.*
- *Always use the keyless entry system transmitter, keyless push start system remote controller or request switch to unlock the doors when the security system has been armed.Using a key instead will trigger the alarm.*
- *If a person who does not know the security system is going to drive the vehicle, we recommend you explain the system and its operation to the person. Mistakenly triggering the alarm may cause a nuisance to others.*
- *Even if the security system is armed, you should still be careful to guard against theft. Do not leave money or valuable things in the vehicle.*

How to Arm the Security System

Lock all doors (including engine hood and tailgate) using the keyless entry system transmitter, keyless push start system remote controller or request switch.
When the system is armed, the indicator (1) continues to blink at intervals of approximately 2 seconds.

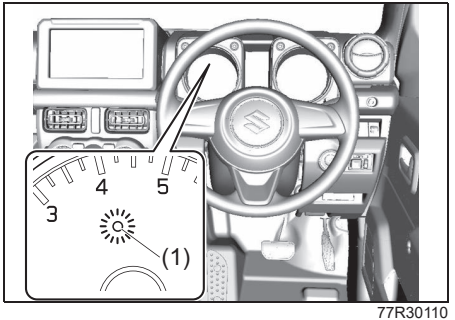

77R30110

NOTE:

- *To prevent the alarm from being accidentally triggered, avoid arming it while anyone remains inside the vehicle. The alarm will be triggered if any person inside opens the door, tailgate, engine hood, or the warning may be triggered.*
- *The security system is not armed when all doors are locked using the key from*

outside, using the door lock knobs or the central door locking switch from inside.

- *If any door is not operated within approximately 30 seconds after the doors have been unlocked using the keyless entry system transmitter, keyless push start system remote controller or request switch, the doors are automatically locked again. When the doors are locked, the security system will be armed.*
- *If the security system indicator (1) blinks when the ignition switch is in the "ON" position or the ignition mode is "ON", there may be something wrong with the security system. Ask your Maruti Suzuki authorized workshop for inspection.*

How to Disarm the Security System

Simply unlock the doors using the keyless entry system transmitter, keyless push start system remote controller or request switch. The security system indicator will go out, indicating that the security system is disarmed.

How to Stop the Alarm

Should the alarm be triggered accidentally, the alarm will stop by the following operations.

- Turn the ignition switch to "ON" position or press the engine switch to change the ignition mode to ON in case of emergency.
- Unlock the doors using the keyless entry system transmitter, keyless push start system remote controller or request switch.

NOTE:

- *Even after the alarm has stopped, if you lock the doors using the keyless entry system transmitter, keyless push start system remote controller or request switch, the security system will be rearmed.*
- *If you disconnect the battery while the security system is in the armed condition or the alarm is actually in operation, the alarm will be re-triggered when the battery is reconnected.*
- *Even after the alarm has stopped at the end of the predetermined operation time, it will be triggered again if any of the doors, tailgate or engine hood is opened, without disarming the security system.*

Checking Whether the Alarm has Been Triggered During Parking

If the alarm was triggered and you then turn the ignition switch to "ON" position or the ignition mode is ON the security system indicator will blink rapidly for about 8 seconds and a buzzer will beep 4 times during this period. If this happens, check whether the vehicle has been broken into while you were away from it.

Security System Indication

- If any of the doors or tailgate are opened without unlocking by the keyless entry system transmitter, keyless push start system remote controller or request switch, all turn signal lights start to blink and the interior buzzer beeps intermittently. After 5 seconds, the siren will sound for about 27.5 seconds. The security system indicator continues to blink during this time.
- If the engine hood is opened, all turn signal lights blink, and the siren sounds for about 27.5 seconds. The security system indicator continues to blink during this time.

Windows

Electric Window Controls

The electric windows can only be operated when the ignition switch is in “ON” position or the ignition mode is ON.

Front

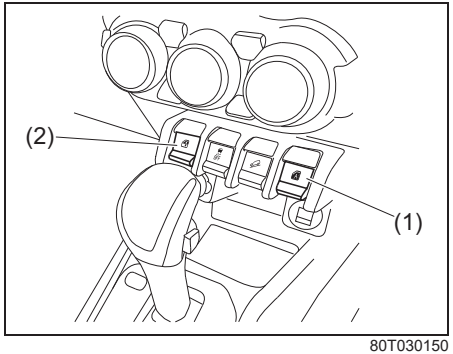

80T030150

The center console has a switch (1) to operate the driver’s window, and a switch (2) to operate the front passenger’s window.

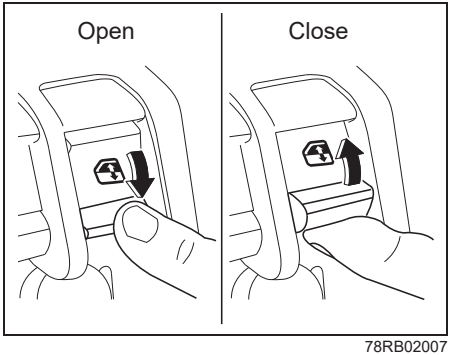

78RB02007

To open a window, push the switch. To close the window, lift up the switch.

The driver’s window has AUTO-DOWN and AUTO-UP (if equipped) features for greater convenience (at toll booths or drive-through restaurants, for example). These features allow the driver to open or close the window without holding the window switch in DOWN or UP position. Press down or lift up the driver’s window switch completely and release it. To stop the window before it reaches the FULL-DOWN or FULL-UP position, pull up or push down the switch briefly.

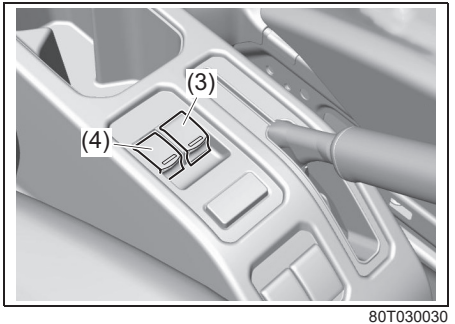

80T030030

The floor console has switches (3) and (4) to operate the rear left and right passenger windows.

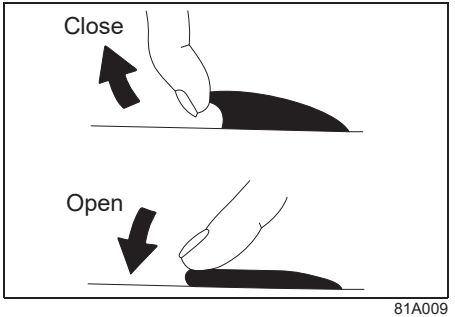

81A009

To open a window, push the top part of the switch. To close the window, lift up the top part of the switch.

Off-delay timer function for the driver's window

After you turn the ignition switch to "ACC" or "LOCK" position or press the engine switch to change ON mode to ACC or LOCK (OFF) mode, you can open or close the driver's window within 30 seconds.

NOTE:
Even within 30 seconds, if the driver's door or the passenger's door is opened, you cannot open or close the driver's window.

Rear

80T030050

The rear passenger's door has a switch (5) to operate the passenger's window.

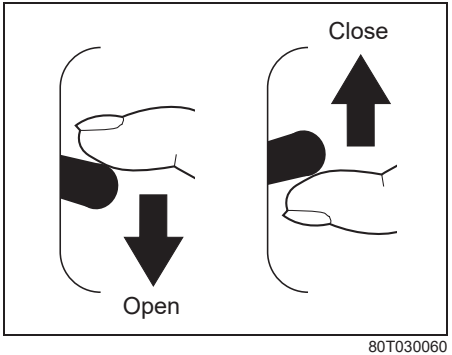

80T030060

To open a window, push the top part of the switch. To close the window, lift up the top part of the switch.

⚠ WARNING

- **When opening or closing a window, a part of body such as hands, legs and neck may be caught by the window and an accident may occur. When you operate a window, observe the following precautions:**
  - **A driver and the other passengers should be careful when opening or closing a window.**
  - **Do not allow a child to operate the window switches.**
  - **You should always lock the passenger's window operation when there are children in the vehicle. Children can be seriously injured if they get part of their body caught by the window during operation. Refer to "Window Lock Switch" in this section for details.**
  - **When you leave your vehicle, make sure to turn the ignition switch to "LOCK" or press the engine switch to change the ignition mode to OFF. Then, carry your key with you and take a child or children out of the vehicle.**

(Continued)

⚠ WARNING

(Continued)

- **When you open or close the front passenger's window or the rear windows on the driver's side, check that the other passengers and children do not take their hands and faces outside the vehicle, before the window operation. Also, make sure to inform them that you will perform the window operation.**

- **When you operate the electric window controls from the outside of the window, your hands or neck may be caught by the window and an accident may occur. Do not operate the electric window controls from the outside of the window.**

NOTE:
If you drive with one of the rear windows open, you may hear a loud sound caused by air vibration. To reduce the sound, open the driver's or front passenger's window, or narrow the rear window opening.

Window Lock Switch

80T030040

The floor console also has a lock switch for the rear passenger's window(s). When you push in the lock switch, the rear passenger's window(s) cannot be raised or lowered by operating any of the switches (3), (4) or (5). To restore normal operation, release the lock switch by pushing it again.

Pinching Prevention Function

The driver's window is equipped with a pinching prevention function. This function detects a foreign object that is caught in the window as it is being closed by AUTO-UP feature, which allows you to close the window without holding the window switch in UP position, and stops the window from closing to prevent damage.

⚠ WARNING

The function may not detect the object depending on shape, size, hardness and position of the object caught by the closing window. This may cause severe injury.
Be very careful when opening or closing the windows.

⚠ CAUTION

- **The pinching prevention function does not operate while you are holding the window switch in UP position.**
- **The pinching prevention function may not detect an object caught in the window just before the window is fully closed.**

NOTE:
Even if you cannot close the window by the AUTO-UP feature because there may be something wrong with the pinching prevention function, you can close the window by holding the window switch in UP position.
If you drive in extreme off-road condition, the pinching prevention function may operate accidentally because the window reacts to vehicle jolting.

Pinching prevention function initialization
When you disconnect and reconnect the lead-acid battery or replace the fuse, the function will be deactivated. In this condition, the AUTO-DOWN feature will be deactivated, while the AUTO-UP feature may remain activated. The pinching prevention function needs to be initialized.

To initialize the pinching prevention function, use the following procedure:
1) Turn the ignition switch to “ON” position or press the engine switch to change the ignition mode to ON.
2) Open the driver’s window fully by holding the window switch in DOWN position.
3) Close the driver’s window by holding the switch in UP position, and keep holding the switch for 2 seconds after the window is fully closed.
4) Check the driver’s window to see if the AUTO-DOWN/UP feature works.

⚠ WARNING

As the pinching prevention function will not operate until its initialization is completed, an accident may occur. Make sure to perform the pinching prevention function initialization.

If the AUTO-DOWN/UP feature will not work after initialization, there might be something wrong with the pinching prevention function. Have your vehicle inspected by a Maruti Suzuki authorized workshop.

Lighting Control Lever

Automatic Light Operation (if equipped)

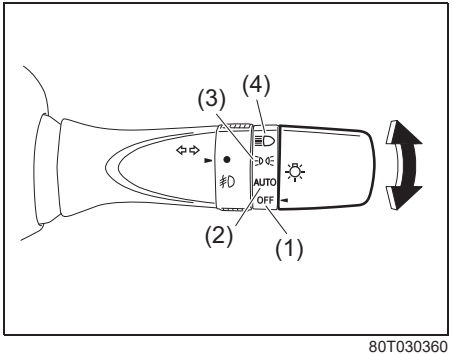

80T030360

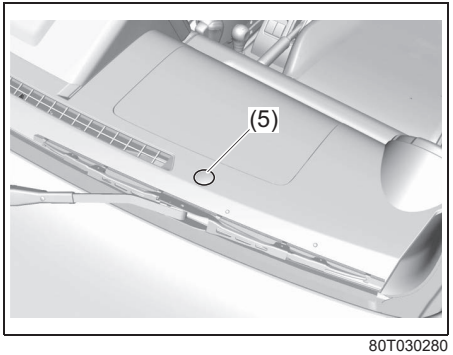

80T030280

Your vehicle's lighting system is controlled by two main systems: the lighting switch and the auto-on headlight system (when the lighting switch is in "AUTO" position).
The two systems work together to operate your lights as shown in the following chart:

ON: Lights ON
LIGHT: When it is light around the light sensor (5).
DARK: When it is dark around the light sensor (5).

Lighting switch position	Main lights to be operated	Ignition switch in the "LOCK" or "ACC" position / Ignition mode LOCK (OFF) or ACC		Ignition switch in the "ON" position / Ignition mode ON	
		LIGHT	DARK	LIGHT	DARK
(1) OFF	Position lights, Tail lights	–	–	–	–
	Headlights	–	–	–	–
(2) AUTO	Position lights, Tail lights	–	–	–	ON
	Headlights	–	–	–	ON
(3)	Position lights, Tail lights	ON	ON	ON	ON
	Headlights	–	–	–	–
(4)	Position lights, Tail lights	ON	ON	ON	ON
	Headlights	ON	ON	ON	ON

To turn the lights on or off, twist the knob on the end of the lever. There are four positions:

OFF (1)
All lights are off.

AUTO (2)
This function works when the ignition switch is turned to "ON" position or the engine switch is pressed to change the ignition mode to ON. The headlights and position lights are turned on and off automatically according to the amount of outside light detected by a sensor. They go out automatically when you turn the ignition switch to "ACC" or "LOCK" position or change the ignition mode to ACC or LOCK (OFF) by pressing the engine switch.

The light sensor (5) for sensing the amount of outside light is installed on the passenger's seat side of instrument panel.

⚠ CAUTION

If the light sensor area of the windshield is covered with mud, ice, or other similar substances, the headlights and position lights may be turned on even when it is still light outside.

NOTE:
- *Avoid covering the light sensor area of the windshield with a sticker. The sticker may impair the performance of the sensor and make the system unable to control operation of the lights correctly.*
- *If you turned the ignition switch to "ON" position or changed the ignition mode to ON by pressing the engine switch and "AUTO" position remains selected, the headlights and position lights come on automatically as it gets dark outside, even with the engine not running. Leaving the lights lit for a long time may lead to a completely discharged battery.*

(3)
Front position lights, tail lights, license plate light and instrument lights are on, but headlights are off.

(4)
Front position lights, tail lights, license plate light, instrument lights and headlights are on.

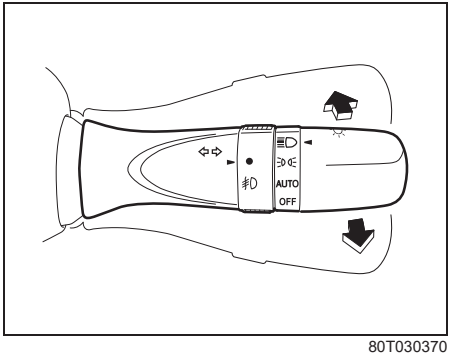

80T030370

With the headlights on, push the lever forward to switch to the high beams (main beams) and pull the lever toward you to switch to the low beams. When the high beams (main beams) are on, a light on the instrument cluster will come on. To momentarily activate the high beams (main beams) as a passing signal, pull the lever slightly toward you and release it when you have completed the signal.

Auto-on headlight system

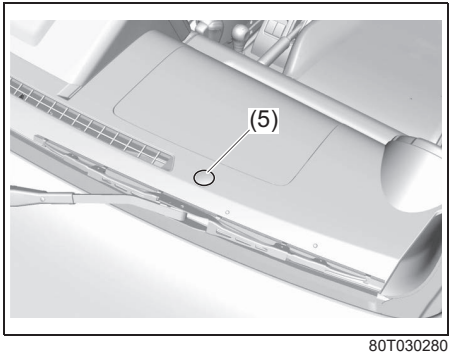

80T030280

The auto-on headlight system automatically turns on all lights that are operated by the lighting switch, when the following three conditions are all met.

Conditions for auto-on headlight system operation:
1) It is dark around the light sensor (5).
2) The lighting switch is in "AUTO" position.
3) You turn the ignition switch to "ON" position or press the engine switch to change the ignition mode to ON.

This system is activated by a signal from the light sensor (5) on the passenger side of instrument panel. Do not cover the sensor (5). Otherwise, the system will not work correctly.

⚠ WARNING

It takes about 5 seconds for the light sensor to react to a change in lighting conditions. To help avoid an accident due to reduced visibility, turn on your headlights before driving into a tunnel, parking structure, etc.

NOTE:
The light sensor reacts even to infrared rays, so it may operate incorrectly when there are strong infrared rays.

Light Reminder Buzzer

The interior buzzer continuously beeps if you open the driver's door without turning off the headlights and position lights. This function is triggered under the following condition:
The headlights and/or position lights are on even after the ignition switch is turned to "LOCK" position, or the engine switch is pressed to change the ignition mode to LOCK (OFF).

The buzzer stops sounding when you turn off the headlights and position lights.

NOTE:
A message is indicated on the information display in the instrument cluster while the buzzer is sounding.

Front Fog Light Switch (if equipped)

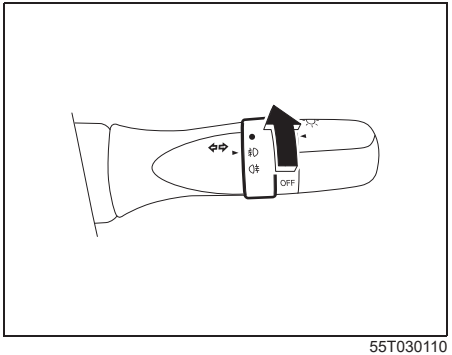

55T030110

To turn the front fog light on, twist the knob as shown in the illustration with the position lights, tail lights and/or the headlights are on. When the front fog light is on, an indicator light on the instrument cluster will come on.

NOTE:
In some countries the lighting operation may be different from the above description according to local regulations.

Headlight Leveling Switch

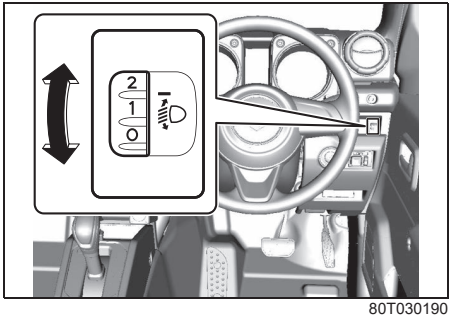

80T030190

Level the headlight beam according to the load condition of your vehicle by turning this switch. The chart shows the appropriate switch position for different vehicle load conditions.

Vehicle Load Condition	Switch Position
Driver only	0
Driver + 1 passenger (in front seat)	0
Driver + 3 passengers, no cargo	1.5
Driver + 3 passengers, cargo added	2.0
Driver + full cargo	3.5

Headlight Washer Switch (if equipped)

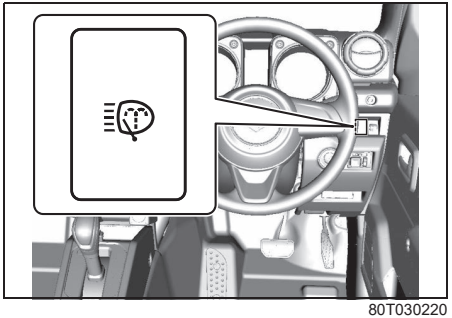

80T030220

With the ignition switch in the “ON” or the ignition mode ON and the headlights are turned on, push the headlight washer switch to wash the headlight lenses. Washer fluid is sprayed for half a second. If necessary, push the switch again.
Under the same conditions, if you operate the windshield washer two or more times successively at short intervals, the headlight washers also operate automatically but only once at the same time as the first windshield washer operation.

Turn Signal Control Lever

You can use the turn signal control lever when the ignition switch is in “ON” position or the engine switch is in ON mode.

Turn Signal Operation

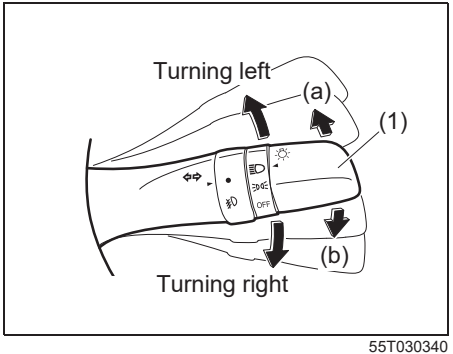

55T030340

With the ignition switch in “ON” position or the ignition mode ON, move the lever upward or downward to activate the right or left turn signals.

- Move the turn signal control lever (1) as follows:
  – Turning left: Move the lever upward.
  – Turning right: Move the lever downward
- When you move the lever, the turn signal lights and the turn signal light indicators on the instrument cluster will flash simultaneously.

- When you move the lever to its original position, the turn signal lights and the turn signal light indicators on the instrument cluster will be turned off.
- When changing lanes, if you lightly press the turn signal control lever in the directions (a) or (b) in which you want to change lanes, the turn signal lights and turn signal light indicators on the instrument cluster will flash only while the turn signal control lever is pressed.
- The turn signal control lever in the above figure is a typical example; the actual equipment depends on the vehicle type.

NOTE:
If the angle which you turn the steering wheel is small, the lever will not automatically returned to its original position. In this case, return the lever to its original position by your hand.

Lane change signal

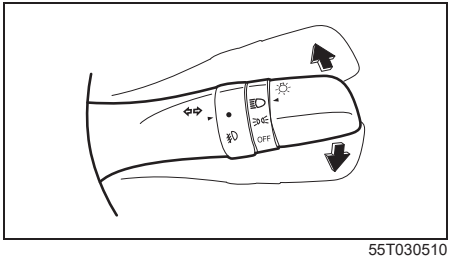

55T030510

Move the lever partially upward or downward to turn right or left and hold the lever in the moved position.

- The turn signal and its indicator flash while the lever is held at the moved position.
- The turn signal and its indicator flash 3 times even if you returned the lever immediately after the activation.

NOTE:
- *The turn signal and its indicator can be set whether they flash 3 times after the turn signal lever is returned via the information display. Refer to "Information Display" in "INSTRUMENT CLUSTER" section.*
- *You can customize the setting for the number of flashing times of the turn signal and its indicator (1 to 4 times). Please ask your Maruti Suzuki authorized workshop for the customization.*

Hazard Warning Switch

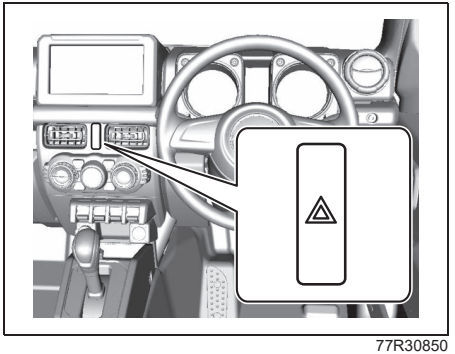

77R30850

You can use the hazard warning switch to warn the other drivers of possible risk of traffic hazard when you park your vehicle in case of emergency.

- Push the hazard warning switch to activate the hazard warning lights. The turn signal lights and the turn signal indicators on the instrument cluster will flash simultaneously.
- Push the switch again to turn off the hazard warning switch.
- The instrument panel in the above figure is a typical example; the actual equipment depends on the vehicle type.

NOTICE

If you use the hazard warning switch for many hours with the engine stopped, the lead-acid battery may run out.
Do not use the hazard warning switch for many hours with the engine stopped.

Windshield Wiper and Washer Lever

When the ignition switch is in “ON” position or the ignition mode is ON, you can use the wiper/washer lever.

⚠ CAUTION

In cold weather, the sprayed washer fluid on the glass may get frozen and it may cause poor visibility to a driver. Use the defroster to warm the glass and spray the washer fluid. Refer to “Heating And Air Conditioning” in the “OTHER CONTROLS AND EQUIPMENT” section.

NOTICE

- **If you use the wipers with the glass dried, the glass and the wiper blade rubbers may be damaged. When the glass is dry, use the washer fluid and then use wipers.**
- **If you operate the wipers with the wiper blades stuck on the glass, the wiper blade rubbers may be damaged or the wipers may be broken. When the wiper blades are stuck on the glass, do not operate the wipers.**
- **If you use the washer when the washer fluid cannot be sprayed enough, the washer pump may be broken. When the washer fluid cannot be sprayed enough, turn off the washer switch.**

When the operative wipers suddenly stop

When the wipers are under heavy load such as covered by snow and the temperature of the wiper motor becomes high, the breaker will be activated and the wipers will temporarily stop to protect the wiper motor from overheating.
If this happens, perform the following operations:

1) Stop the vehicle in a safe place, and turn the ignition switch to “ACC” or “LOCK” position or press the engine switch to change the ignition mode to ACC or LOCK (OFF).
2) Move the wiper lever and switch to “OFF” position.
3) Remove obstacles such as snow on the wipers.
4) After a while, when the temperature of the wiper motor becomes low enough, the breaker will be reset automatically and you can use the wipers.

If you cannot use the wipers after a while, there may be another problem. Ask your Maruti Suzuki authorized workshop to have the wipers inspected.

Windshield Wipers

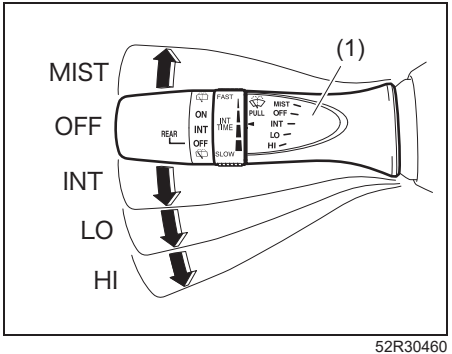

52R30460

You can operate the windshield wipers by moving the lever (1) upward or downward.

MIST	Temporary operation only while the lever is up
OFF	Off
INT	Intermittent operation
LO	Low speed operation
HI	High speed operation

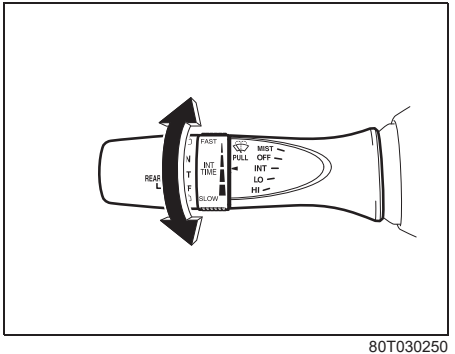

80T030250

The lever is equipped with the “INT TIME” control. Turn the control forward or rearward to adjust the intermittent wiper operation to the desired interval.

Windshield Washer

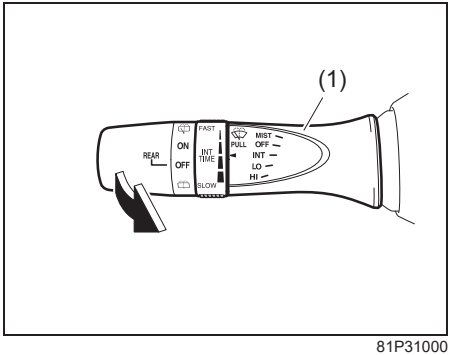

81P31000

If you pull the lever (1) toward you, the windshield washer fluid will be sprayed and the windshield wipers will automatically operate a few times.

⚠ WARNING

- **To prevent windshield icing in cold weather, turn on the defroster to heat the windshield before and during windshield washer use.**
- **Do not use radiator antifreeze in the windshield washer reservoir. It can severely impair visibility when sprayed on the windshield, and can also damage your vehicle's paint.**

NOTICE

To help prevent damage to the windshield wiper and washer system components, you should take the following precautions:

- **Do not continue to hold in the lever when there is no windshield washer fluid being sprayed or the washer motor can be damaged.**
- **Do not attempt to remove dirt from a dry windshield with the wipers or you can damage the windshield and the wiper blades. Always wet the windshield with washer fluid before operating the wipers.**
- **Clear ice or packed snow from the wiper blades before using the wipers.**
- **Check the washer fluid level regularly. Check it often when the weather is bad.**

Rear Window Wiper

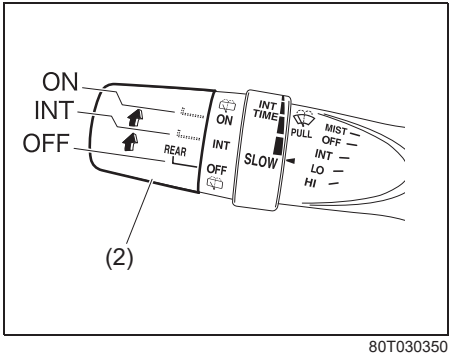

80T030350

You can operate the rear window wiper by twisting the lever (2) as shown in the illustration.

ON	Normal operation
INT	Intermittent operation
OFF	Off

NOTICE

Clear ice or snow from the rear window and rear wiper blade before using the rear wiper. Accumulated ice or snow could prevent the wiper blade from moving, causing damage to the wiper motor.

Rear Window Washer

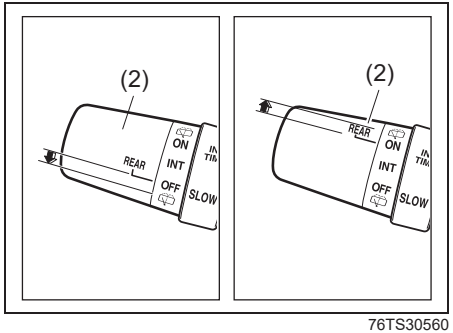

76TS30560

- If you twist the lever (2) in the direction of ⬆ and align it to (washer) position above “ON” position, the rear window washer fluid will be sprayed and the rear wiper will operate simultaneously. If you release your hand from the lever, it will return to “ON” position.
- If you twist the lever (2) in the direction of ⬇ and align it to (washer) position below “OFF” position, the rear window washer fluid will be sprayed and the rear wiper will operate simultaneously. If you release your hand from the lever, it will return to “OFF” position.

Horn

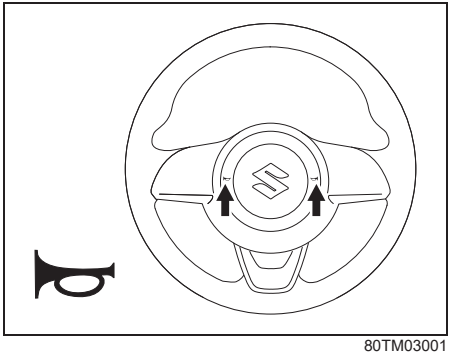

80TM03001

Press the horn button of the steering wheel to sound the horn.

Heated Rear Window Switch

Type 1

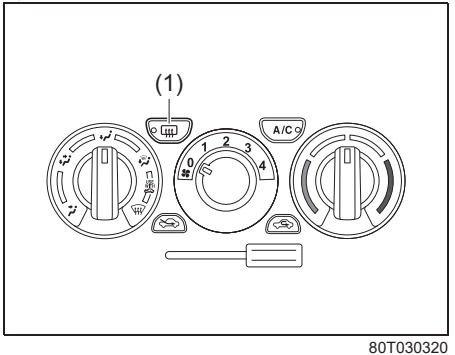

80T030320

Type 2

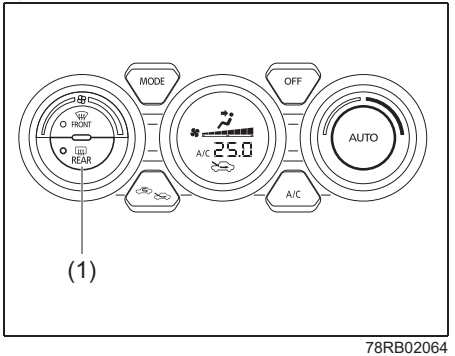

78RB02064

When the rear window is misted, push this switch (1) to clear the window.

An indicator light will come on when the defogger is on. The defogger will work only when the engine is running. To turn off the defogger, push the switch (1) again.

NOTICE
The heated rear window use a large amount of electricity. Turn off the switch after the window have become clear.

NOTE:
- *The defogger will work only when the engine is running.*
- *The defogger will automatically turn off after the defogger remains on for 15 minutes to prevent discharging of the lead-acid battery.*

INSTRUMENT CLUSTER

Instrument Cluster 4-1
Information Switch (if equipped) 4-3
Information Display 4-4
Warning and Indicator Lights 4-25

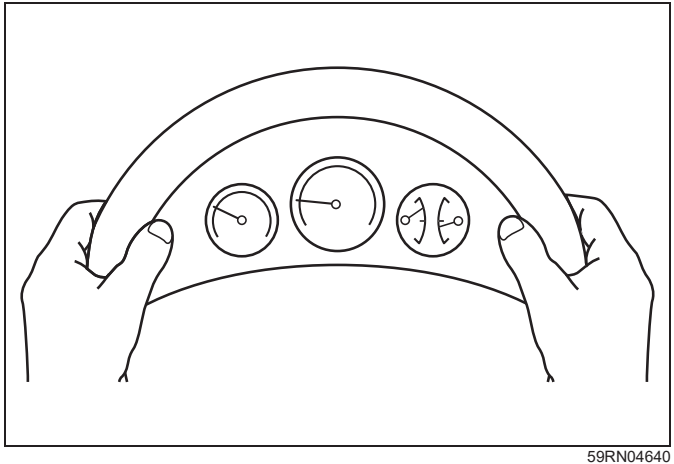

59RN04640

Instrument Cluster

(1) Speedometer
(2) Tachometer
(3) Information display
(4) Trip meter selector knob
(5) Indicator selector knob
(6) Warning and indicator lights

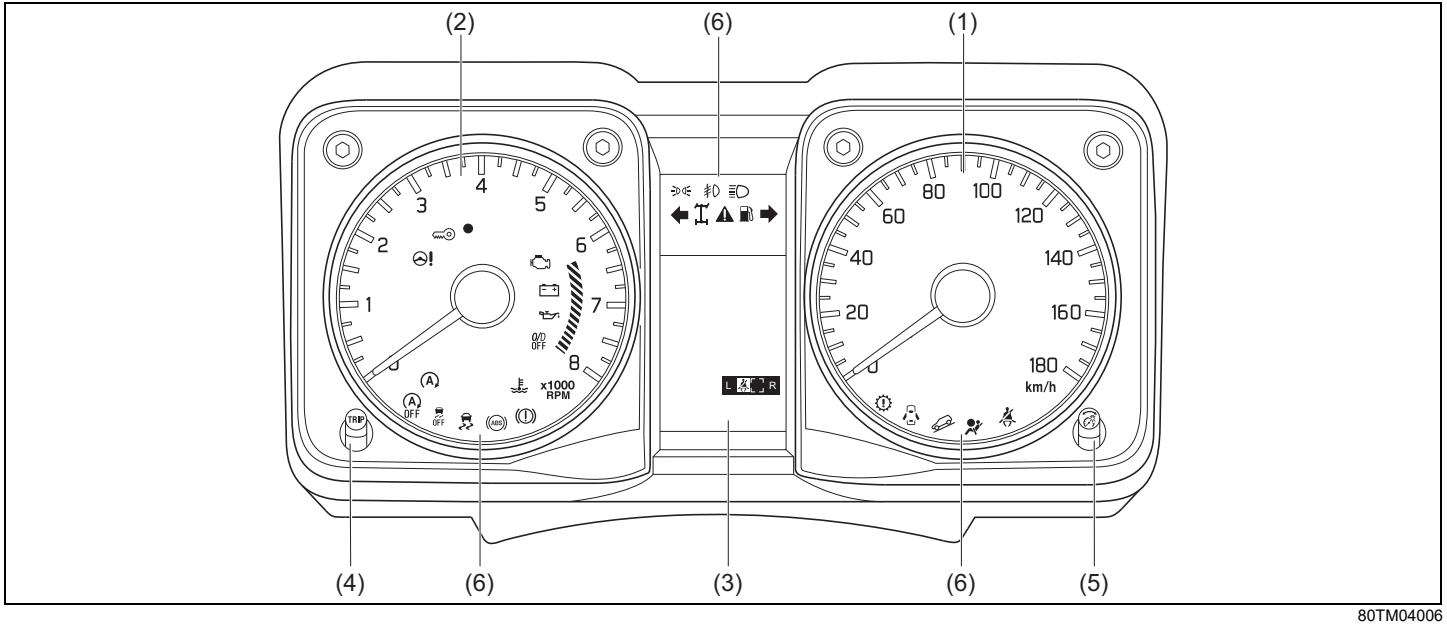

80TM04006

Speedometer
The speedometer indicates vehicle speed.

Tachometer
The tachometer indicates engine speed in revolutions per minute.

NOTICE

Never drive the vehicle with the engine revving in the red zone or severe engine damage can result.
Keep the engine speed below the red zone even when downshifting to a lower gear position.
Refer to "Downshifting maximum allowable speeds" in "OPERATING YOUR VEHICLE" section.

Fuel Gauge

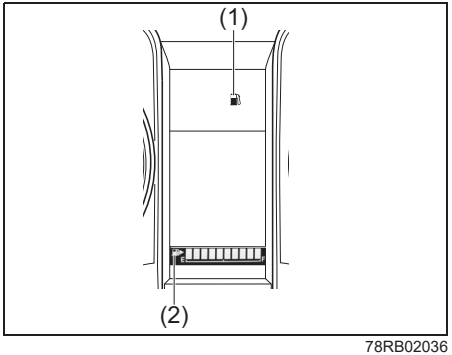

78RB02036

When the ignition switch is in "ON" position or the ignition mode is ON, this gauge gives an approximate indication of the amount of fuel in the fuel tank. "F" stands for full and "E" stands for empty.

- If the indicator shows only one segment to "E", refill the tank as soon as possible.

If the last segment blinks, it means that the fuel is almost empty. If the low fuel warning light (1) comes on, fill the fuel tank immediately. Refer to "Low fuel warning light" in "Warning and indicator lights" in this section for details. The mark (2) indicates that the fuel filler door is located on the right side of the vehicle.

NOTICE

To minimize the possibility of damage to catalytic converter or other components of the vehicle, avoid driving the vehicle near empty fuel tank level.

Brightness Control

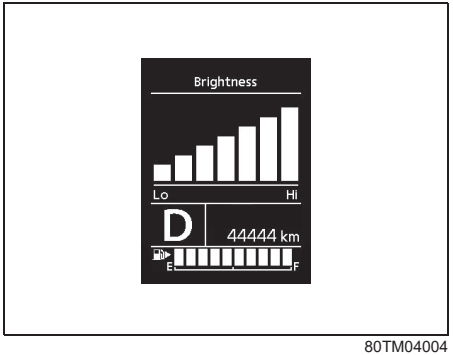

80TM04004

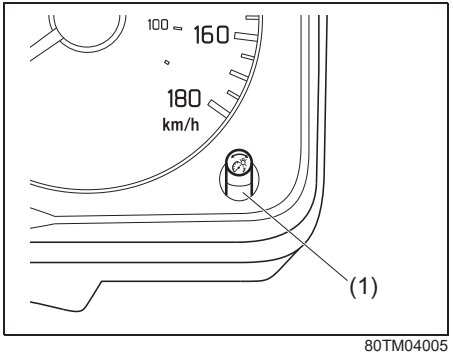

80TM04005

When the ignition switch is in “ON” position or the ignition mode is ON, the instrument panel lights come on.
Your vehicle has a system to automatically dim the brightness of the instrument panel lights when the position lights or headlights are on.

When the position lights and/or headlights are on, you can adjust the meter illumination brightness.

To increase the brightness of the instrument panel lights, turn the indicator selector knob (1) clockwise.

To reduce the brightness of the instrument panel lights, turn the indicator selector knob (1) counterclockwise.

⚠ WARNING

Do not adjust the brightness of the instrument panel lights while driving. Otherwise, you could lose control of the vehicle.

NOTE:
- *If you do not turn the knob within several seconds, the brightness control display will be canceled automatically.*
- *When you reconnect the lead-acid battery, the brightness of the instrument panel lights will be reinitialized. Readjust the brightness according to your preference.*
- *If you adjust to the maximum brightness level when the position lights or headlights are on, the following functions will be cancelled.*
  - *The function which automatically dims the brightness of instrument panel lights*
  - *The function which operates with the brightness control, except maximum brightness level*

Information Switch (if equipped)

You can use the information switch to switch the display indication when the ignition switch is in “ON” position and the vehicle is stationary.

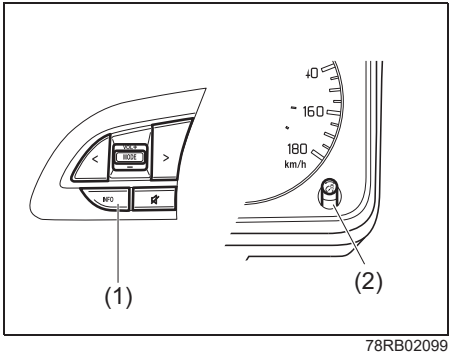

78RB02099

(1) Information switch
(2) Indicator selector knob

To switch to the setting mode

1) Push and hold the information switch (1) when the vehicle is stationary.
2) After the display of setting mode is shown, select the setting item that you want to change by turning the indicator selector knob (2) left or right. Refer to “Setting mode” in this section for details.

NOTE:
If you switch to the setting mode while either of the following items is shown on the information display, the current value will be reset. If you do not want to reset its value, push the indicator selector knob (2) quickly beforehand and switch to the other item.

- *Average fuel consumption*
- *Driving time*
- *Average speed*

To exit the setting mode

To exit the setting mode, select “Back” and push the indicator selector knob (2) or push the information switch (1) quickly.

NOTE:
You can exit the setting mode by either of the following operations:

- *Turn the ignition switch to “ACC” or “LOCK” position or change the ignition mode to ACC or LOCK (OFF) by pressing the engine switch.*
- *Start driving your vehicle.*

Information Display

The information display is shown when the ignition switch is in “ON” position or the ignition mode is ON.

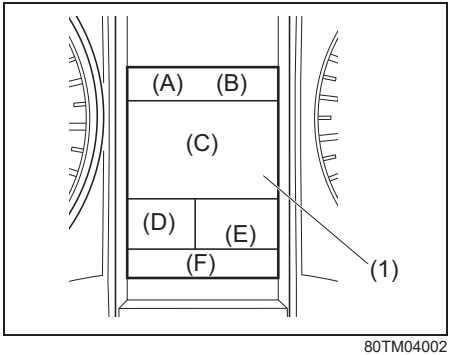

80TM04002

(1) Information display

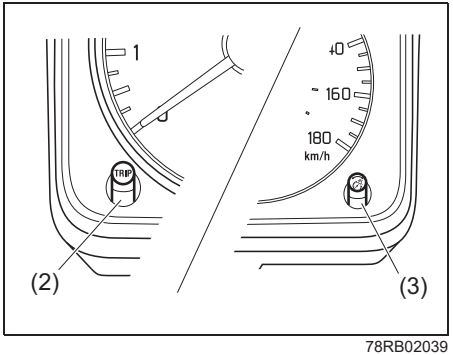

78RB02039

(2) Trip meter selector knob
(3) Indicator selector knob

The information display shows the following information.

Display (A)
Clock

Display (B)
Thermometer

Display (C)
Warning and indicator messages / Fuel consumption / Driving range / Average speed / Driving time / Cruise control (if equipped)

Display (D)
Selector position (for Automatic transmission models) / Gearshift indicator (if equipped)

Display (E)
Trip meter / Odometer

Display (F)
Fuel gauge

80TM04003

When the ignition switch is turned “ON” position or the ignition mode is ON, the message shown in the above illustration will appear on the display for several seconds.
Some warning and indicator messages may appear on the display when the ignition switch is in “ACC” or “LOCK” position or the ignition mode is ACC or LOCK (OFF).

Clock

When the ignition switch is turned “ON” position or the ignition mode is ON, the display (A) shows the time.

To set the clock, follow “Setting mode” instructions in this section.

⚠ WARNING

If you attempt to adjust the display while driving, you could lose control of the vehicle.
Do not attempt to adjust the display while driving.

Thermometer

When the ignition switch is in “ON” position or the ignition mode is ON, the display (B) shows the thermometer.
The thermometer indicates the outside temperature.

78RB02040

If the outside temperature nears freezing condition, the mark (a) will appear on the display.

NOTE:
- *The outside temperature indication is not the actual outside temperature when driving at low speed, or when stopped.*
- *If there is something wrong with the thermometer, or just after the ignition switch is turned “ON” or changed the ignition mode to ON, the display may not indicate the outside temperature.*

When the display (C) shows the driving range, you can change the unit of temperature.
To change the unit of temperature, refer to “Setting mode” in this section.

52RM20880

Fuel Consumption / Driving Range / Average Speed / Driving Time

When there are no warning or indicator messages on the display (C), you can select one of the following indications to appear on the display: instantaneous fuel consumption, average fuel consumption, driving range, average speed, driving time or no indication.

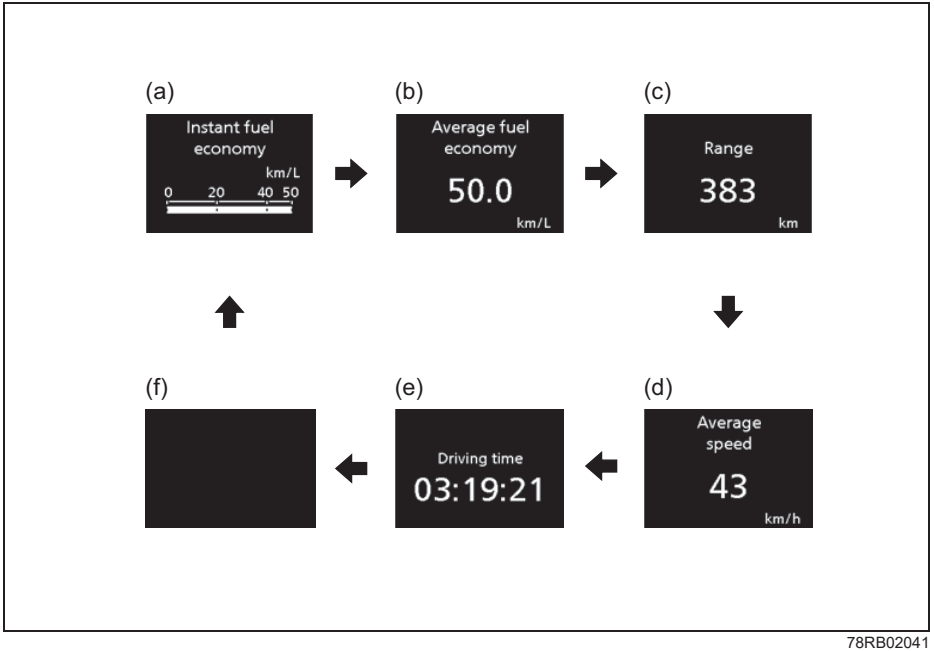

78RB02041

(a) Instantaneous fuel consumption
(b) Average fuel consumption
(c) Driving range
(d) Average speed
(e) Driving time
(f) No indication

To switch the display indication, push the indicator selector knob (3) quickly.

NOTE:
The value of fuel consumption, driving range and average speed shown on the display are affected by the following conditions;

- *road condition*
- *surrounding traffic condition*
- *driving condition*
- *vehicle condition*
- *a malfunction which causes the malfunction indicator light to come on or blinks*

Instantaneous fuel consumption
The display shows instantaneous fuel consumption with a bar graph only when the vehicle is moving.

NOTE:
- *The display does not show the bar graph unless the vehicle is moving.*
- *Depending on the vehicle's specification, the fuel consumption units of initial setting are indicated as L/100km, km/L.*
- *The indicated maximum value of instantaneous fuel consumption is one of the followings. No more than the maximum value will be indicated on the display even if the actual instantaneous fuel consumption is higher.*
  – *For L/100km setting: 30*
  – *For km/L setting: 50*
- *The indication on the display may be delayed if fuel consumption is greatly affected by driving conditions.*
- *The display shows estimated values. Indications may not be the same as actual values.*

Average fuel consumption
If you previously selected average fuel consumption setting, the display shows average fuel consumption from the last reset to the present when the ignition switch is turned "ON" or the engine switch is pressed to change the ignition mode to ON.

NOTE:
When you reconnect the terminals to the lead-acid battery, the value of average fuel consumption will be shown after driving for a period of time.

You can select the timing to reset the value of average fuel consumption by one of the following three methods;
- Reset after refuel: the value of average fuel consumption will be reset automatically by refueling.
- Reset with trip meter A: the value of average fuel consumption will be reset automatically by resetting trip meter A.
- Reset manually: the value of average fuel consumption will be reset by pushing and holding the indicator selector knob (3) when the display indicates the average fuel consumption.

To change the timing to reset the value of average fuel consumption, refer to "Setting mode" in this section.

NOTE:
If you add only a small amount of fuel when you select "Reset after refuel", the average fuel consumption value may not be reset.

Driving range
If you selected driving range the last time you drove the vehicle, the display indicates "---" for a few seconds and then indicates the current driving range when the ignition switch is turned "ON" or the engine switch is pressed to change the ignition mode to ON.

The driving range shown in the display is an indicative unit of the approximate distance you can drive until the fuel gauge indicates "E", based on current driving conditions and current fuel level in the fuel tank.

When the low fuel warning light comes on, the display "---" will appear.

If the low fuel warning light comes on, fill the fuel tank immediately regardless of the value of driving range shown in the display.

When you refuel, the driving range is updated. However, if you only add a small amount of fuel, the correct value will not be displayed.

NOTE:
- *If you refuel when the ignition switch is "ON" or the ignition mode is ON, the driving range may not indicate the correct value.*
- *When you reconnect the terminals to the lead-acid battery, the value of driving range will be shown after driving for a period of time.*

- *If there are substantial changes in the driving pattern or vehicle usage, the displayed range may vary significantly.*

Average speed
If you selected average speed the last time you drove the vehicle, the display indicates the last value of average speed from previous driving when the ignition switch is turned “ON” or the engine switch is pressed to change the ignition mode to ON. Unless you reset the value of average speed, the display indicates the value of average speed which includes average speed during previous driving.

To reset the value of average speed, push and hold the indicator selector knob (3) for a while when the display indicates an average speed. The display shows “---” and then indicates a new average speed after driving for a short time.

NOTE:
When you reconnect the terminals to the lead-acid battery, the value of average speed will be shown after driving for a period of time.

Driving time
The display shows the total amount of driving time since the indication was reset.
- To reset the driving time, push and hold the indicator selector knob (3) for a while when the display shows the driving time.

NOTE:
- *When you reset the indication or reconnect the terminals to the lead-acid battery, the driving time will be shown after driving for a while.*
- *The indicated maximum value of driving time is 99:59:59. No more than the maximum value will be indicated on the display until you reset the driving time.*

Selector Position (for Automatic transmission vehicles) / Gearshift Indicator (for Manual transmission vehicles)

The display (D) shows some of the following indications.

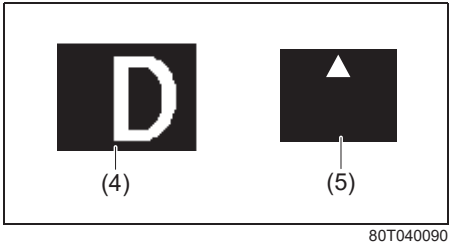

80T040090

(4) Selector position
(5) Gearshift indicator

Refer to “Gearshift indicator” in “OPERATING YOUR VEHICLE” section.

Trip Meter / Odometer

The display (E) shows one of the following indications; odometer, trip meter A or trip meter B.
To switch the display indication (E), push the trip meter selector knob (2).

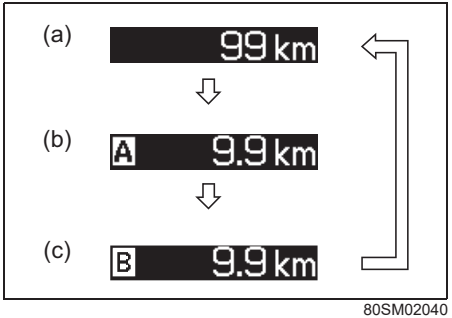

80SM02040

⇧ ⇩	Push the trip meter selector knob (2).

(a) Odometer
(b) Trip meter A
(c) Trip meter B

⚠ WARNING

If you attempt to adjust the display while driving, you could lose control of the vehicle.
Do not attempt to adjust the display while driving.

Trip meter

The trip meter can be used to measure the distance traveled on short trips or between fuel stops.
You can use trip meter A or trip meter B independently.

To reset the trip meter, push and hold the trip meter selector knob (2) until the display shows 0.0.

NOTE:
The indicated maximum value of the trip meter is 9999.9. When you run past the maximum value, the indicated value will return to 0.0.

Odometer

The odometer records the total distance the vehicle has been driven.

NOTICE

Keep track of your odometer reading and check the maintenance schedule regularly for required services. Increased wear or damage to certain parts can result from failure to perform required services at the proper mileage intervals.

Fuel Gauge

The display (F) shows the fuel gauge.
Refer to “Fuel gauge” in this section.

Setting Mode

When the ignition switch is in “ON” position or the ignition mode is ON and the vehicle is stationary, you can enter the setting mode of the information display by pushing and holding the indicator selector knob (3) for a while.

- To select the setting that you want to change, turn the indicator selector knob (3) left or right.
- To change the setting, push the indicator selector knob (3).
- To exit the setting mode, select “Back” and push the indicator selector knob (3).

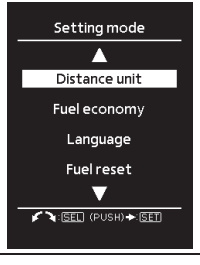

78RB02096

NOTE:
The currently selected setting item is surrounded by a frame.

NOTE:
- *If you push and hold the indicator selector knob (3) to enter the setting mode when the display (C) shows average fuel consumption or average speed, driving time, the value will be reset simultaneously. If you do not want to reset the value, push the indicator selector knob quickly to switch the indication of the display.*
- *If you turn the ignition switch, press the engine switch or start to move the vehicle when the display is in the setting mode, the setting mode will be canceled automatically.*

Distance unit
(Odometer / trip meter / driving range / average speed distance unit setting)
You can change the units in which odometer / trip meter / driving range / average speed distance is displayed.

Fuel economy
(Fuel consumption unit setting)
You can change the units that fuel consumption is displayed in.

Language
You can change the language of the information display.

Fuel reset
(Average fuel consumption reset setting)
You can change when the value of average fuel consumption is reset.

Temperature
(Temperature unit setting)
You can change the units that temperature is displayed in.
- To change the temperature unit, select “Temperature” in “Setting mode”. Then, select “°C” or “°F”.

NOTE:
When you change the units that temperature is displayed in, the automatic heating and air conditioning system temperature display units will be changed automatically.

Clock setting
(Adjusting the clock)
- Adjust the clock by selecting “Clock setting” in “Setting mode”. Then, select “Adjust Clock”.
- To change the hour indication, turn the indicator selector knob (3) left or right repeatedly when the hour indication appears as reversed color. To change the hour indication quickly, turn and hold indicator selector knob (3). To set the hour indication, push the indicator selector knob (3) and the minute indication appears as reversed color.
- To change the minute indication, turn the indicator selector knob (3) left or right repeatedly when the minute indication appears as reversed color. To change the minute indication quickly, turn and hold indicator selector knob (3). To set the minute indication, push the indicator selector knob (3).

(Selecting 12H/24H format)
- Switch the time indication between 12-hour and 24-hour format by selecting “Clock setting” in “Setting mode”. Then, select “12H” or “24H”.

Door lock (Door lock setting)
(Auto lock)
- Manual Lock:
  Disable the automatic door locking function
- Speed Sync:
  Lock all doors when the vehicle speed reaches 15 km/h (default setting)
- Gear shift sync: (if equipped)
  Lock all doors when the gearshift lever is in other than “P” position.

(Auto unlock)
- Sync Off:
  Disable the automatic door unlocking function (default setting)
- IGN-OFF Sync:
  (vehicle with keyless push start system)
  Unlock all doors when the engine switch is pressed to change the ignition mode to LOCK (OFF)
- IGN-OFF Sync:
  (vehicle without keyless push start system)
  Unlock all doors when the ignition switch is turned to “LOCK” position
- Gear shift sync:
  (for automatic transmission vehicle)
  Unlock all doors when the gearshift lever is moved from other position to “P” position.

(Alarm)
- You can turn off or on the siren sound when the door(s) is(are) locked or unlocked.

Lights
(Lane change setting)
The turn signal and its indicator can be set whether they flash three times even if you return the turn signal control lever shortly after operating it.
- To change the lane change setting, select “Lane change” in “Setting mode”. Then, select “ON” or “OFF”
- If you want to change the number of flashing, consult with a Maruti Suzuki authorized workshop.

IS A/C (ENG A-STOP system setting)
- When using the automatic heating and air conditioning system (if equipped), you can select one of the following engine auto stop settings.
  – Standard
  – Economy
  – Comfort
- When “Economy” is selected, engine auto stop condition is eased, compared with “Standard”. As engine auto stop condition will occur more frequently, the stop time will be longer, leading to reduction of fuel consumption.
- When “Comfort” is selected, engine auto stop condition becomes severe, compared with “Standard”. As engine auto stop condition will occur less frequently, the stop time will be shorter, leading to more comfortable cabin condition by air conditioner.

Default
(Initialization setting)
If you select “YES” and push the indicator selector knob (3), all settings will be reinitialized.

Warning and Indicator Messages

The display shows warning and indicator messages to let you know about certain vehicle problems.
In some cases, the internal buzzer may also sound at the same time to alert you.

If warning and indicator messages appear on the display, follow the messages.

Master warning indicator light

80P0382

When the display shows warning and indicator messages, the master warning indicator light may also blink.

NOTE:
- *When the problem that causes a message to appear is corrected, the message will disappear.*
- *If a message is displayed, and other problems requiring a message occur, the message for each of the problems will be alternately displayed about every 5 seconds.*
- *When you push and hold the indicator selector knob (3) for several seconds while a message is displayed, the message will disappear temporarily. If the problem that caused the message is not corrected, the message will appear again after several seconds.*

Warning and indicator messages

When ignition switch is in “ACC” or “LOCK” position or ignition mode is ACC or LOCK (OFF)

All models

Warning and indicator message	Master warning indicator light	Sound	Cause and remedy
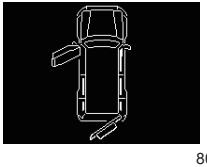 80T040280	Off	Off	A door or tailgate is not properly closed. Stop the vehicle in a safe place and close the door or tailgate properly.
61MM0A172	Blinks	Continuous beep (from interior buzzer)	The headlights and/or the position lights are left on. Turn them off.

Vehicle with keyless push start system

Warning and indicator message	Master warning indicator light	Sound	Cause and remedy
ACC IGNITION SWITCH POSITION 61MM0A163	Off	Off	This message is displayed when ACC position is selected as the ignition mode. *1
PUSH START SWITCH 75RM214	Off	Off	The brake pedal is depressed. Press the engine switch to start the engine.
Manual transmission PRESS BRAKE AND CLUTCH TO START 61MM0A166	Off	Off	The engine switch is pressed without depressing the brake and clutch pedals. Try again as instructed by the message.

*1:This message will disappear for a while even if the problem that caused the message to appear is not corrected.

Warning and indicator message	Master warning indicator light	Sound	Cause and remedy
Automatic Transmission PRESS BRAKE SHIFT TO P TO START 61MM0A165	Off	Off	The engine switch is pressed with the gear-shift lever in a position other than “P” or “N” or without depressing the brake pedal. Shift into “P” and depress the brake pedal.
Automatic Transmission P GEARSHIFT NOT IN PARK 75RM221	Off	Off	The engine switch is pressed with the gear-shift lever in a position other than “P”. Shift into “P” and depress the brake pedal.
SERVICE STEERING LOCK SYSTEM 61MM0A168	Blinks	Beep (one time from interior buzzer)	There is a problem with the steering lock system. Have your vehicle inspected by a Maruti Suzuki authorized workshop.

Warning and indicator message	Master warning indicator light	Sound	Cause and remedy
SERVICE START SYSTEM 75RM215	Blinks	Beep (one time from interior buzzer)	There is a problem with the immobilizer/ keyless push start system. Also, the vehicle battery voltage may be decreased. When the message is displayed even if you start the engine with normal voltage of the vehicle battery, have your vehicle inspected by a Maruti Suzuki authorized workshop.
KEY FOB NOT DETECTED 75RM216 PLACE KEY FOB ON START SWITCH 75RM217	Blinks	Beep (two times from interior/exterior buzzer)	The remote controller may be outside the vehicle or its battery may be discharged. Bring the remote controller in the vehicle or touch the engine switch with the remote controller. If the message still appears, replace the remote controller battery.

Warning and indicator message	Master warning indicator light	Sound	Cause and remedy
KEY FOB NOT DETECTED 75RM216 PLACE KEY FOB ON START SWITCH 75RM217	Blinks	Beep (five times from interior/exterior buzzer) and then Beep (one time from interior buzzer)	When the engine switch was in ACC or ON mode, the remote controller was detected. However, when you started the vehicle, the remote controller was not detected. Bring the remote controller in the detectable area and try to push the engine switch again.
KEY FOB NOT DETECTED 75RM216	Blinks	Beep (five times from exterior buzzer)	When you started the engine or the engine switch is in ACC or ON mode, you opened or closed any of the doors and the remote controller was out of the detectable area. Bring the remote controller in the detectable area.

When ignition switch is in “ON” position or ignition mode is ON

All models

Warning and indicator message	Master warning indicator light	Sound	Cause and remedy
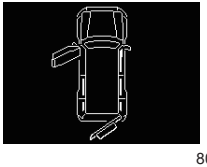 80T040280	Blinks (only while driving)	Beep (one time from interior buzzer) (only while driving)	A door or tailgate is not properly closed. Stop the vehicle in a safe place and close the door or tailgate properly. *1
75RM268	Blinks	Continuous beep (from interior buzzer)	The parking brake is not released. Stop the vehicle in a safe place and release the parking brake.
75RM213	Off	Beep (one time from interior buzzer)	Fuel level is low. Refill it as soon as possible. *1

*1: This message will disappear for a while even if the problem that caused the message to appear is not corrected.

Warning and indicator message	Master warning indicator light	Sound	Cause and remedy
ICE POSSIBLE DRIVE WITH CARE 78RB02047	Off	Off	The road may be icy. Drive very carefully. *1
ESP SERVICE ESP SYSTEM 75RM223	Blinks	Beep (one time from interior buzzer)	There may be a problem with ESP® system. Have your vehicle inspected by a Maruti Suzuki authorized workshop.
Hill hold control system / Hill descent control system ESP HILL HOLD DISABLE 75RM224	Blinks	Beep (one time from interior buzzer)	There may be a problem with hill hold control system or hill descent control system. Have your vehicle inspected by a Maruti Suzuki authorized workshop.

*1: This message will disappear for a while even if the problem that caused the message to appear is not corrected.

Warning and indicator message	Master warning indicator light	Sound	Cause and remedy
Hill hold control system ESP HILL HOLD DISABLE 75RM224	Blinks	Beep (one time from interior buzzer)	When the transfer lever is in “4L” position and ESP® OFF switch is pushed and turned off the ESP® systems, the hill hold control system is deactivated and this message appears. This is not a malfunction and check that the hill hold control system is deactivated.

Vehicle with keyless push start system

Warning and indicator message	Master warning indicator light	Sound	Cause and remedy
ON IGNITION SWITCH POSITION 75RM218	Off	Off	This message is displayed when ON position is selected as the ignition mode. *1
PUSH START SWITCH 75RM214	Off	Off	The brake pedal is depressed. Press the engine switch to start the engine.
Manual transmission PRESS BRAKE AND CLUTCH TO START 61MM0A166	Off	Off	The engine switch is pressed without depressing the brake and clutch pedals. Try again as instructed by the message.

Warning and indicator message	Master warning indicator light	Sound	Cause and remedy
Automatic Transmission PRESS BRAKE SHIFT TO P TO START 61MM0A165	Off	Off	The engine switch is pressed with the gear-shift lever in a position other than “P” or “N” or without depressing the brake pedal. Shift into “P” and depress the brake pedal.
SERVICE STEERING LOCK SYSTEM 61MM0A168	Blinks	Beep (one time from interior buzzer)	There is a problem with the steering lock system. Have your vehicle inspected by a Maruti Suzuki authorized workshop.
TRN. STEERING WHEEL TO RELEASE LOCK 75RM219	Blinks	Beep (one time from interior buzzer)	The steering lock is not disengaged. While lightly turning the steering wheel in left and right directions, press the engine switch again.

Warning and indicator message	Master warning indicator light	Sound	Cause and remedy
SERVICE START SYSTEM 75RM215	Blinks	Beep (one time from interior buzzer)	There is a problem with the immobilizer/ keyless push start system. Also, the vehicle battery voltage may be decreased. When the message is displayed even if you start the engine with normal voltage of the vehicle battery, have your vehicle inspected by a Maruti Suzuki authorized workshop.
KEY FOB LOW BATTERY 75RM220	Off	Off	The remote controller battery is about to become flat. Replace the battery. *1

*1:This message will disappear for a while even if the problem that caused the message to appear is not corrected.

Warning and indicator message	Master warning indicator light	Sound	Cause and remedy
KEY FOB NOT DETECTED 75RM216 PLACE KEY FOB ON START SWITCH 75RM217	Blinks	Beep (two times from interior/exterior buzzer)	The remote controller may be outside the vehicle or its battery may be discharged. Bring the remote controller in the vehicle or touch the engine switch with the remote controller. If the message still appears, replace the remote controller battery.

Warning and Indicator Lights

NOTE:
If warning and indicator lights blink or come on, the corresponding messages may be shown on the information display.

Brake System Warning Light

82K170

Three different types of operations exist depending on the vehicle's specification.

1) The light comes on briefly when the ignition switch is turned to "ON" position or the engine switch is pressed to change the ignition mode to ON.The light comes on when the parking brake is engaged with the ignition mode ON.
2) The light comes on when under either or both of above two conditions.

The light also comes on when the fluid in the brake fluid reservoir falls below the specified level.

The light should go out after starting the engine and fully releasing the parking brake, if the fluid level in the brake fluid reservoir is adequate.

The light also comes on together with the ABS warning light when the rear brake force control function (proportioning valve function) of the ABS system fails.

If the brake system warning light comes on while you are driving the vehicle, it may mean that there is something wrong with the vehicle's brake system. If this happens, you should:

1) Pull off the road and stop carefully.

⚠ WARNING

Remember that stopping distance may be longer, you may have to push harder on the pedal, and the pedal may go down farther than normal.

2) Test the brakes by carefully starting and stopping on the shoulder of the road.
3) If you determine that it is safe, drive the vehicle cautiously at low speed to the nearest Maruti Suzuki authorized workshop for repairs or tow the vehicle to the nearest Maruti Suzuki authorized workshop for repairs.

⚠ WARNING

If any of the following conditions occur, you should immediately ask your Maruti Suzuki authorized workshop to inspect the brake system.

- **If the brake system warning light does not go out after the engine has been started and the parking brake has been fully released.**
- **If the brake system warning light does not come on when the ignition switch is turned "ON" or the engine switch is pressed to change the ignition mode to ON.**
- **If the brake system warning light comes on at any time during vehicle operation.**

NOTE:
Because the brake system is self-adjusting, the fluid level will drop as the brake pads become worn. Replenishing the brake fluid reservoir is considered normal periodic maintenance.

NOTE:
(Parking Brake Reminder Buzzer)
A buzzer sounds intermittently to remind you to release the parking brake if you start the vehicle without releasing the parking brake. Make sure that the parking brake is fully released and the brake system warning light turns off.

Anti-lock Brake System (ABS) Warning Light

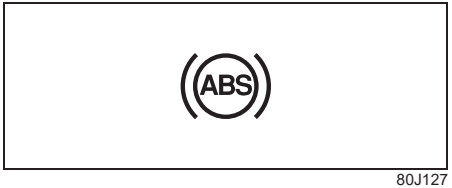

80J127

When the ignition switch is turned to “ON” position or the engine switch is pressed to change the ignition mode to ON, the light comes on briefly so you can check that the light is working.

If the light stays on, or comes on when driving, there may be something wrong with the ABS.

If this happens:
1) Pull off the road and stop carefully.
2) Turn the ignition switch to “LOCK” position or change the ignition mode to LOCK (OFF) by pressing the engine switch and then start the engine again.

If the warning light comes on briefly then turns off, the system is normal. If the warning light still stays on, the system will be something wrong.

If the light and the brake system warning light stay on, or come on simultaneously when driving, your ABS system is equipped with the rear brake force control function (proportioning valve function) and there may be something wrong with both the rear brake force control function and anti-lock function of the ABS system.

If one of these happens, have the system inspected by a Maruti Suzuki authorized workshop.
If the ABS becomes inoperative, the brake system will function as an ordinary brake system that does not have this ABS system.

For details of ABS system, refer to “Anti-Lock Brake System (ABS)” in the “OPERATING YOUR VEHICLE” section.

ESP® Warning Light

52KM133

ESP® is a registered trademark of Mercedes-Benz Group AG.

This light blinks 5 times per second when one of the ESP® systems other than ABS is activated. If this light blinks, drive carefully.

When the ignition switch is turned to “ON” position or the engine switch is pressed to change the ignition mode to ON, the light comes on briefly so you can check that the light is working. If the light stays on, or comes on when driving and remains on, there may be something wrong with the ESP® systems (other than ABS). You should have your vehicle inspected by a Maruti Suzuki authorized workshop.

For details of the ESP® systems, refer to “Electronic Stability Program (ESP®)” in the “OPERATING YOUR VEHICLE” section.

⚠ WARNING

The ESP® systems cannot prevent accidents. Always drive carefully.

ESP® OFF Indicator Light

57L30045

When the ignition switch is turned to “ON” position or the engine switch is pressed to change the ignition mode to ON, this light comes on briefly so you can check that the light is working.

When the ESP® OFF switch is pushed to turn off the ESP® systems (other than ABS), the ESP® OFF indicator light comes on and stays on.

For details of the ESP® systems, refer to “Electronic Stability Program (ESP®)” in the “OPERATING YOUR VEHICLE” section.

NOTE:
- *If the vehicle speed is greater than approximately 30 km/h, the ESP® systems (other than ABS) will be activated automatically and the light will go out.*
- *When the transfer lever is in “4L” (4-wheel drive low range) position, the ESP® system (other than ABS) will be canceled automatically. The light will come on and stay on.*

Hill Descent Control Indicator Light

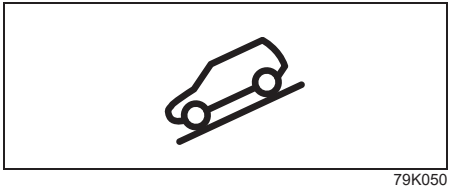

79K050

When the ignition switch is turned to “ON” position or the engine switch is pressed to change the ignition mode to ON, this light comes on briefly so you can check that the light is working. When you push the hill descent control switch and the hill descent control operating conditions are fulfilled, the hill descent control indicator comes on. If the hill descent control indicator blinks, the hill descent control will not be activated.

For details of the hill descent control system, refer to “Hill descent control system” in the “OPERATING YOUR VEHICLE” section.

Engine Oil Pressure Warning Light

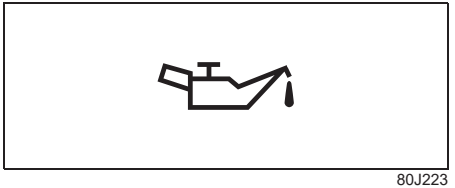

80J223

This light comes on when the ignition switch is turned to “ON” position or the engine switch is pressed to change the ignition mode to ON, and goes out when the engine is started. The light will come on and remain on if there is insufficient oil pressure. If the light comes on when driving, pull off the road as soon as you can and stop the engine.
Check the oil level and add oil if necessary. If there is enough oil, the lubrication system should be inspected by a Maruti Suzuki authorized workshop before you drive the vehicle again.

NOTICE

- **If you operate the engine with this light on, severe engine damage can result.**
- **Do not rely on the engine oil pressure warning light to indicate the need to add oil. Be sure to periodically check the engine oil level.**

Charge Warning Light

80J226

This light comes on when the ignition switch is turned to “ON” position or the engine switch is pressed to change the ignition mode to ON, and goes out when the engine is started. The light will come on and remain on if there is something wrong with the battery charging system. If the light comes on when the engine is running, the charging system should be inspected immediately by a Maruti Suzuki authorized workshop.

Seat belt reminder light

60G049

When the driver and/or front passenger do(does) not buckle his or her seat belt, this light will come on and/or blink.
For details of the seat belt reminder, refer to “Seat Belt Reminder” in “FOR SAFE DRIVING” section.

NOTE:
Along with the seat belt reminder light, a reminder message shall also come on the information display (if equipped), for unrestrained driver and/or front passenger.

Rear Passenger’s Seat Belt Reminder Light

80TM04007

Reminder light for rear passengers to fasten their seat belts. For details of the Rear Passenger’s Seat Belt Reminder Light, refer to “Seat Belt Reminder” in “FOR SAFE DRIVING” section.

Airbag Warning Light

63J030

This light blinks or comes on for several seconds when the ignition switch is turned to “ON” position or the engine switch is pressed to change the ignition mode to ON, so you can check if the light is working.

The light will come on and stay on if there is a problem in the airbag system or the seat belt pretensioner system.

⚠ WARNING

If the airbag warning light does not blink or come on briefly when the ignition switch is turned to “ON” position or the engine switch is pressed to change the ignition mode to ON, stays on for more than 6 seconds, or comes on while driving, the airbag system or the seat belt pretensioner system may not work properly, which could result in serious injury in the event of a crash. Have both systems inspected by a Maruti Suzuki authorized workshop.

Malfunction Indicator Light

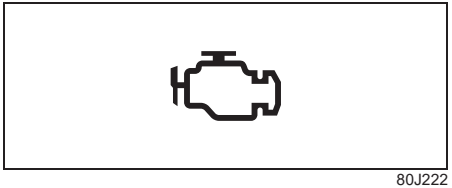

80J222

Your vehicle has a computer-controlled emission control system. A malfunction indicator light is provided on the instrument panel to indicate when it is necessary to have the emission control system serviced. The malfunction indicator light comes on when the ignition switch is turned to “ON” position or the engine switch is pressed to change the ignition mode to ON, to let you know the light is working and goes out when the engine is started.

If the malfunction indicator light comes on or blinks when the engine is running, there is a damage in the emission control system.
Bring the vehicle to a Maruti Suzuki authorized workshop to have the damage fixed.

Also, if this light comes on when the engine is running, there is a problem with the automatic transmission system. Ask your Maruti Suzuki authorized workshop to inspect the system.

⚠ WARNING

If this light blinks, stop your vehicle immediately in a safe place to avoid catalyst's melting problem since there may be a misfire in the engine.
- **Do not drive or stop over such as withered grasses.**
- **Drive slowly if required to move the vehicle.**

NOTICE

Continuing to drive the vehicle when the malfunction indicator light is on or blinking can cause permanent damage to the vehicle’s emission control system, and can affect fuel economy and driveability.

Transmission Warning Light (Automatic Transmission models)

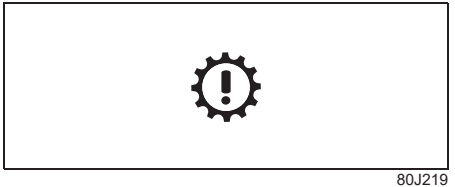

80J219

When the ignition switch is turned to “ON” position or the engine switch is pressed to change the ignition mode to ON, this light comes on for several seconds so you can check that the light is working.

If this light comes on when the ignition switch is turned to “ON” position or the engine switch is pressed to change the ignition mode to ON, there is a problem with the automatic transmission system.
If this light comes on or blinks, stop the vehicle in a safe place and contact a Maruti Suzuki authorized workshop. If the light comes on or blinks again after the light goes out, have the system inspected by a Maruti Suzuki authorized workshop.

Immobilizer / Keyless Push Start System Warning Light

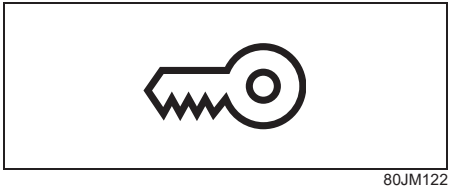

80JM122

When the ignition switch is turned to “ON” position or the engine switch is pressed to change the ignition mode to ON, the light comes on briefly so you can check that the light is working.

If this light blinks or stays on, there is a problem with the system.

If this light still blinks or stays on even if you start the engine with normal voltage of the vehicle battery, ask your Maruti Suzuki authorized workshop for inspection.

Open Door Warning Light

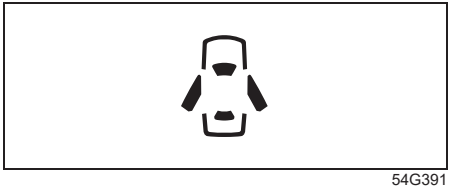

54G391

This light remains on until all doors (including the tailgate) are completely closed.

If any door (including the tailgate) is open when the vehicle is moving, a ding sounds to remind you to close all doors completely.

Low Fuel Warning Light

54G343

If this light comes on, refuel the fuel tank as soon as possible.When this light comes on, a ding sounds once to remind you to refuel. If you do not refuel, a ding sounds every time when the ignition switch is turned to “ON” position or the engine switch is pressed to change the ignition mode to ON.

NOTE:
The activation point of this light varies depending on road conditions (for example, slope or curve) and driving conditions because of fuel movement in the tank.

Electric Power Steering Light

80J408

This light comes on when the ignition switch is turned to “ON” position or the engine switch is pressed to change the ignition mode to ON, and goes out when the engine is started.

If this light comes on while driving, the power steering system may not work properly. Have your vehicle inspected by a Maruti Suzuki authorized workshop.

NOTE:

- *Following operations of the steering wheel while parking or driving at a very lowspeed may have steering effort bigger gradually. This is not a malfunction of the steering system, but the power steering control system limits the power assist in order to prevent them from overheating.*
  - *The steering wheel is operated very often.*
  - *The steering wheel is kept in a fully turned position for a long while.*

  When the power steering control system cool down, the power steering system back to the original condition.
  However, repeating these operations could cause the power steering system damaged.
- *If the power steering system does not work properly, you will feel heavier to steer but you still will be able to steer.*
- *If the steering is operated, you may hear a noise. This is normal and indicates that the power steering system works properly.*

Low Engine Coolant Temperature Light (blue color)

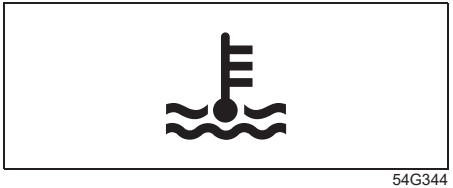

54G344

When the ignition switch is turned to “ON” position or the engine switch is pressed to change the ignition mode to ON, this light comes on and stays on if the engine is cold, and goes off after the engine warms up.

If this light still stays on after the engine warms up, there is a problem with the sensor.
Have your vehicle inspected by a Maruti Suzuki authorized workshop.

High Engine Coolant Temperature Warning Light (red color)

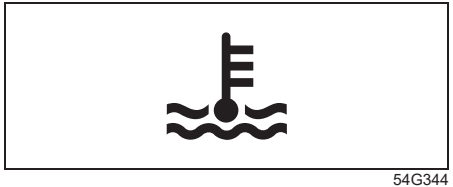

54G344

When the ignition switch is turned to “ON” position or the engine switch is pressed to change the ignition mode to ON, this light comes on briefly so you can check that the light is working. If this light blinks while driving, it means the engine is running hot. If the light stays on after blinking, then the engine is overheating. To avoid actual overheating, if this light blinks or stays on while driving, follow the instructions in the “If the Engine Overheats” of “EMERGENCY SERVICE” section.

NOTICE
Continuing to drive the vehicle when engine overheating is indicated can result in severe engine damage.

Turn Signal Indicators

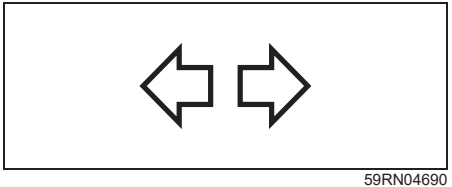

59RN04690

When you turn on the left or right turn signals, the corresponding green arrow on the instrument panel will blink along with the respective turn signal lights. When you turn on the hazard warning switch, both arrows will blink along with all of the turn signal lights.

NOTE:
If any abnormality of the turn signals is observed, such as fast blinking, there may be a malfunction in the turn signal system. Ask your Maruti Suzuki authorized workshop to inspect the system.

Main Beam (High beam) Indicator Light

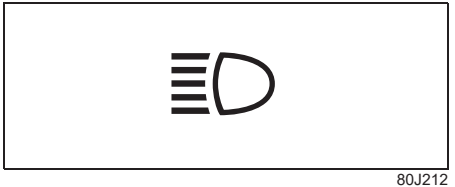

80J212

This indicator comes on when headlight main beams (high beams) are turned on.

Illumination Indicator Light

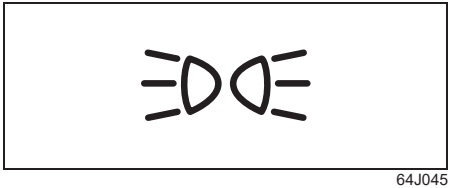

64J045

This indicator light comes on while the position lights, tail light and/or the head-lights are on.

Front Fog Light Indicator Light (if equipped)

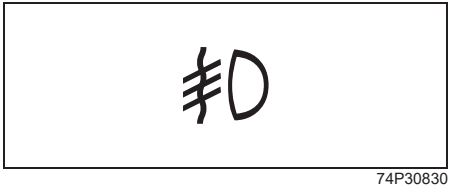

74P30830

The front fog light indicator light comes on when the front fog light operates.

Overdrive OFF Switch Light (if equipped)

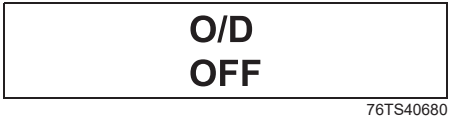

76TS40680

The transmission is a 4-speed (3-speed plus overdrive) automatic transmission. By operating the overdrive off switch, the transmission can be converted to a 3-speed automatic transmission that will not move to the overdrive position. To convert the transmission to the 3-speed mode, push in the overdrive off switch and release it.

To return the transmission to the 4-speed mode, push in the overdrive off switch again.

When the ignition switch is turned to “ACC” position or the engine switch is pressed to change the ignition mode to ACC, the transmission in the 3-speed mode is converted to the 4-speed mode automatically. The 3-speed mode is suitable for the following driving conditions:

- Driving on hilly, winding roads
  - You can drive more smoothly with less frequent gear changing
- Going down a steep hill
  - Some engine braking is provided

For details, refer to “Overdrive off switch” in “OPERATING YOUR VEHICLE” section.

4WD Indicator Light

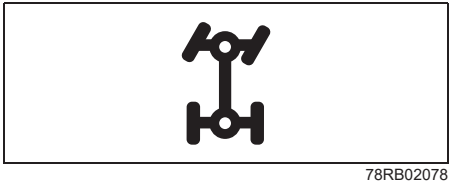

78RB02078

This indicator light comes on when the transfer gear and the air locking hubs are switched to 4-wheel drive condition (“4H” or “4L”).

When the ignition switch is turned to “ON” position or the engine switch is pressed to change the ignition mode to ON, this 4WD indicator light will come on for a while and then this light will turned on or off according to the drive condition.

If 4WD indicator light continues to blink, there may be a malfunction of the system. If so, have your vehicle inspected by a Maruti Suzuki authorized workshop.

When you shift the transfer lever from “2H” position to “4H” position at a speed of 100 km/h or more, this indicator light blinks.

When you shift transfer lever again while changing the drive condition, this indicator blinks.

NOTE:
When the drive condition is 4-wheel drive condition and the engine is not running with the ignition switch turned "ON" or the ignition mode to ON, this 4WD indicator light will come on for a while and then blink. In this situation, when you start the engine and this indicator light comes on, the system does not indicate a malfunction.

ENG A-STOP Indicator Light

72M00032

When the ignition switch is turned to "ON" position or the engine switch is pressed to change the ignition mode to ON, this light comes on briefly to let you know the light is working.

When the engine stops automatically, this light comes on.

For details, refer to "ENG A-STOP System (Engine Auto Stop Start System)" in the "OPERATING YOUR VEHICLE" section.

ENG A-STOP OFF Indicator Light

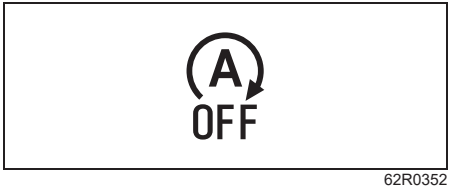

62R0352

When the ignition switch is turned to "ON" position or the engine switch is pressed to change the ignition mode to ON, this light comes on briefly if the system works properly.

When you push the ENG A-STOP OFF switch, this light comes on.

If this light blinks when driving, there may be something wrong with the ENG A-STOP system. You should have the system inspected by a Maruti Suzuki authorized workshop.

For details, refer to "ENG A-STOP System (Engine Auto Stop Start System)" in the "OPERATING YOUR VEHICLE" section.

Security System Indicator

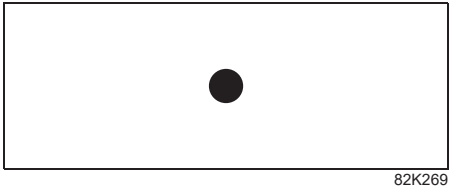

82K269

For details about the security system, refer to "Security System" in the "BEFORE DRIVING" section.

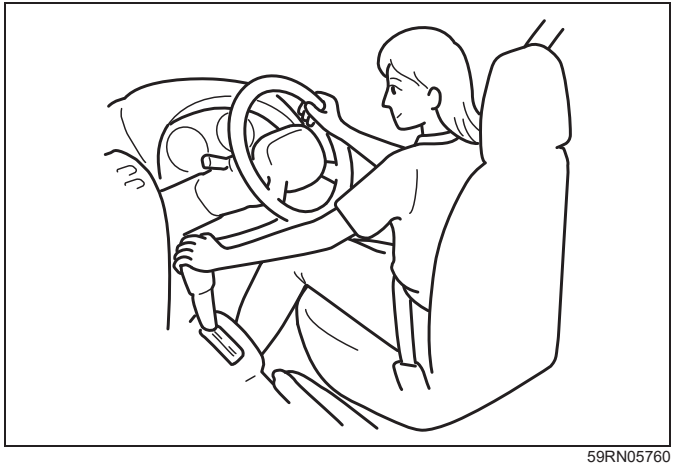

59RN05760

OPERATING YOUR VEHICLE

Daily Inspection Checklist 5-1
Ignition Switch (Vehicle without Keyless Push Start System) 5-3
Engine Switch (Vehicle with Keyless Push Start System) 5-5
Immobilizer System 5-7
Pedal 5-9
Keyless Push Start System (if equipped) 5-10
Starting / Stopping Engine (Vehicle without Keyless Push Start System) 5-13
Starting / Stopping Engine (Vehicle with Keyless Push Start System) 5-15
ENG A-STOP System (Engine Auto Stop Start System) 5-19
Air Conditioning System Settings by ENG A-STOP System 5-28
Parking Brake Lever 5-29
Precaution for Parking 5-30
Using Transmission 5-33
Gearshift Indicator (if equipped) 5-37
Transfer lever 5-39
Cruise Control (if equipped) 5-45
Parking Sensors 5-47
Rearview Camera 5-50
Electronic Stability Program (ESP®) 5-56
Braking 5-63
Anti-lock Brake System (ABS) 5-64

Daily Inspection Checklist

Before Driving

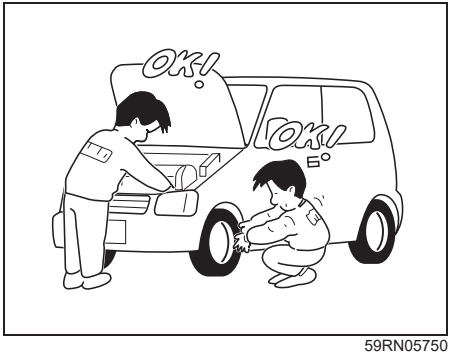

59RN05750

1) Check that the windows, mirrors, lights and reflectors are clean and unobstructed.
2) Visually check the tyres for the following points:
   – the depth of the tread groove
   – abnormal wear, cracks and damage
   – loose wheel nuts
   – existence of foreign material such as nails, stones, etc.

   Refer to “Tyres” in “INSPECTION AND MAINTENANCE” section for details.

3) Look for fluid and oil leakage.

NOTE:
It is normal for water to drip from the air conditioning system while and after use.

4) Check that the hood is fully closed and latched.
5) Check the headlights, turn signal lights, brake lights and horn for proper operation.
6) Adjust the seat and head restraint.
7) Check the brake pedal feeling and the adjustment condition for the parking brake lever or pedal.
   Refer to “Brake” in “INSPECTION AND MAINTENANCE” section for details.
8) Adjust the mirrors.
9) Check that you and all the passengers have properly fastened the seat belts.
10) Check that all the warning lights come on as the ignition switch is turned to “ON” position or the press the engine switch to change the ignition mode to ON.
11) Check all the gauges.
12) Check that the brake system warning light turns off when the parking brake is released.

Once a week, or each time you fill your fuel tank, or before a long distance driving (like highway driving) perform the following under-hood checks:

- Engine oil level
- Coolant level
- Brake fluid level
- Battery fluid (acid) level
- Windshield washer fluid level
- Hood latch operation

Pull the hood release lever inside the vehicle. Check that you cannot open the hood further without releasing the secondary latch. Close the hood securely after checking for proper latch operation. See the item “All latches, hinges and locks” of “CHASSIS AND BODY” in “Maintenance Schedule” in “INSPECTION AND MAINTENANCE” section for lubrication schedule.

⚠ WARNING

Check that the hood is fully closed and latched before driving. If it is not, it can fly up unexpectedly during driving, obstructing your view and resulting in an accident.

Once a month, or each time you fill your fuel tank, check the tyre pressure using a tyre pressure gauge. Also check the tyre pressure of the spare tyre.

When You Notice the Following Symptoms

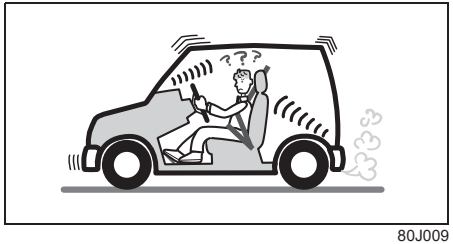

80J009

⚠ CAUTION

If you keep using your vehicle in the following conditions, malfunction and an accident may occur. Consult with a Maruti Suzuki authorized workshop.

- **Leaked oil or other liquid appears on the ground below the vehicle.**
- **Brake fluid level is low.**
- **There are unusual odors, sounds or vibrations.**
- **The feeling of operating the steering wheel, the acceleration or the brakes is different than usual.**

Check the Tyre Pressure

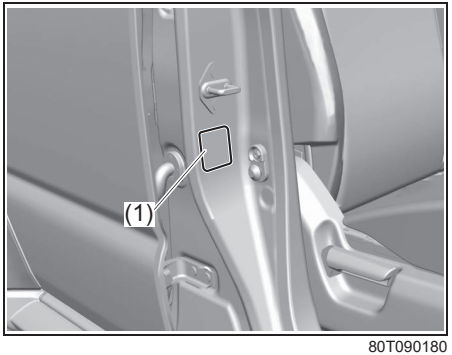

80T090180

- Periodically check and adjust the tyre pressure. The specified tyre pressure for the tyres of this vehicle can be confirmed by checking the tyre information label (1) affixed to the opening of the driver's door.
- Driving with insufficient tyre pressure can cause the sides of the tyre to wear, in addition to decreasing fuel efficiency.

⚠ WARNING

- **Driving with extremely low tyre pressure can cause a tyre blowout (bursting) and may result in an accident. Do not drive with extremely low tyre pressure.**

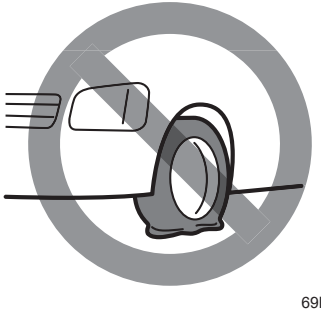

69RHS173

- **If the specified tyre pressure is not maintained, the full performance of the vehicle cannot be achieved and the following could occur, leading to accidents or malfunctions. Adjust the tyre pressure as specified.**
  - **Decreased driving stability**
  - **Longer distance required for braking**

(Continued)

⚠ WARNING

(Continued)
- **Accurate tyre rotation speed cannot be detected, which interferes with the following functions:**
  - **ABS**
  - **Electronic stability program (ESP®)**

To adjust the tire pressure, refer to “Tyres” in “INSPECTION AND MAINTENANCE” section.

Check the Exhaust Pipe

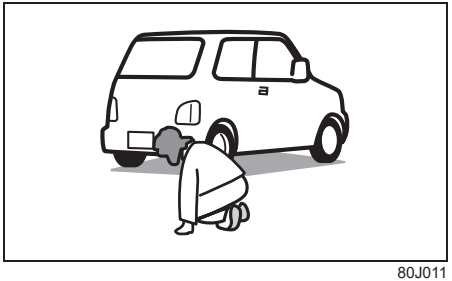

80J011

Periodically check the exhaust pipes for holes or cracks.

⚠ WARNING

If leaks in exhaust pipes are present, exhaust gas could enter the vehicle and possibly cause carbon monoxide poisoning. If you feel that something is abnormal, consult with a Maruti Suzuki authorized workshop.

Ignition Switch (Vehicle without Keyless Push Start System)

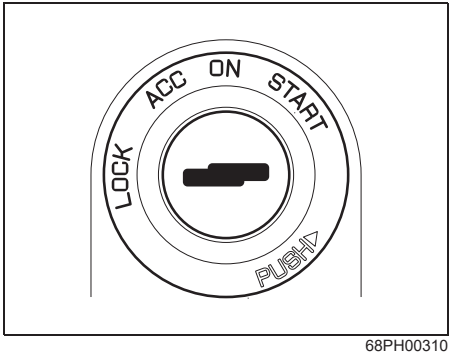

68PH00310

The ignition switch has the following four positions:

LOCK
This is the normal parking position. It is the only position in which the key can be removed.

Manual transmission

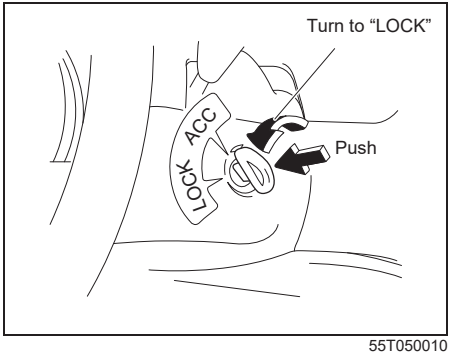

55T050010

- **Manual transmission vehicles:**
  You must push in the key to turn it to “LOCK” position. It locks the ignition, and prevents normal use of the steering wheel after the key is removed.

- **Automatic transmission vehicles:**
  The gearshift lever must be in “P” (Park) position to turn the key to “LOCK” position. It locks the ignition and prevents normal use of the steering wheel and gearshift lever.

To release the steering lock, insert the key and turn it clockwise to one of the other positions. If you have trouble turning the key to unlock the steering wheel, try turning the steering wheel slightly to the right or left while turning the key.

ACC
Accessories such as the radio can operate, but the engine is off.

ON
This is the normal operating position. All electrical systems are on.

START
This is the position for starting the engine using the starter motor. The key should be released from this position as soon as the engine starts.

Ignition key reminder
A buzzer sounds intermittently to remind you to remove the ignition key if it is in the ignition switch when the driver’s door is opened.

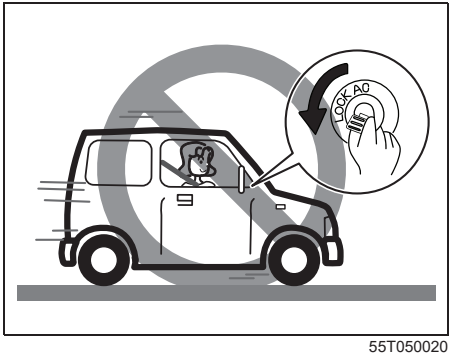

55T050020

⚠ WARNING

- **Never return the ignition switch to “LOCK” position and remove the ignition key while the vehicle is moving. The steering wheel will lock and you will not be able to steer the vehicle.**

(Continued)

⚠ WARNING

(Continued)

- **Always return the ignition switch to "LOCK" position and remove the ignition key when leaving the vehicle even only for a short time. Also do not leave children alone in a parked vehicle. Unattended children could cause accidental movement of the vehicle or could tamper with power windows. They also could suffer from heat stroke in warm or hot weather. These could result in severe injury or even death.**

NOTICE

Do not leave the ignition switch in "ON" position if the engine is not running as the lead-acid battery will discharge.

Engine Switch (Vehicle with Keyless Push Start System)

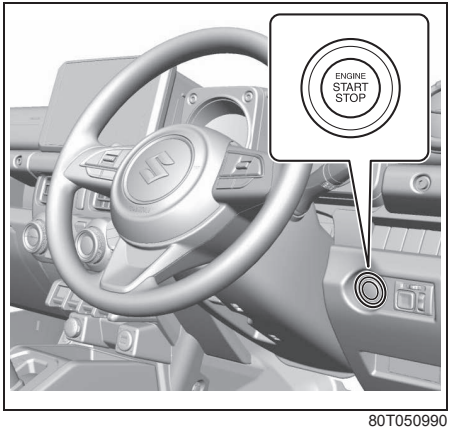

80T050990

LOCK (OFF)

This mode is for parking the vehicle. When this mode is selected by pressing the engine switch and then any door (including the tailgate) is opened or closed, the steering will be locked automatically.

ACC

Press the engine switch to select this ignition mode to use such electric equipment as the audio system, outside rearview mirrors and accessory socket with the engine off. When this position is selected, the information display in the instrument cluster shows the following message.

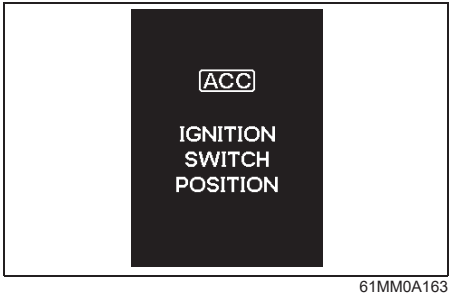

61MM0A163

ON

- **With the engine off**
  You can use such electric equipment as the power windows and wipers with the engine off. When this ignition mode is selected by pressing the engine switch, the information display in the instrument cluster shows the following message.

75RM214

- **With the engine on**
  All electric equipment is operational. The vehicle can be driven when you have selected this ignition mode by pressing the engine switch.

START
Manual transmission vehicles:
Provided you have the keyless push start system remote controller with you, the engine automatically starts when you press the engine switch to select this ignition mode after shifting to “N” (Neutral) and depressing the brake and clutch pedals.

Automatic transmission vehicles:
Provided you have the keyless push start system remote controller with you, the engine automatically starts when you press the engine switch to select this ignition mode after placing the gearshift lever in “P” (Park) position and depressing the brake pedal. (If you need to restart the engine while the vehicle is moving, shift into “N”.)

NOTICE

Do not leave the engine switch in ACC or ON mode when the engine is not running. Avoid using the radio or other electric accessories for a long time when the engine switch is in ACC or ON mode when the engine is not running, otherwise the lead-acid battery may discharge.

NOTE:
- *The steering will be unlocked when you press the engine switch to change the ignition mode from LOCK (OFF) to ACC or ON.*
- *You do not need to keep the engine switch pressed until the engine starts.*
- *In the presence of strong radio wave or noise, you may not be able to change the ignition mode to ACC or ON or to start the engine using the engine switch. In this case, the information display in the instrument cluster will show the following message.*

75RM216

Unreleased Steering Lock Warning

If the steering lock remains engaged when you press the engine switch to change the ignition mode to ON, the information display in the instrument cluster shows the following message and you cannot start the engine. If this happens, press the engine switch, turning the steering wheel to right or left.

80T050010

80T050030

NOTE:
The steering lock may not be released and the immobilizer / keyless push start system warning light turns on if some load is applied on the steering wheel. If this happens, turn the steering wheel system to the right or left to relieve it from the load before you press the engine switch again to change to the desired ignition mode.

Immobilizer System

This system is designed to help prevent vehicle theft by electronically disabling the engine starting system.
The engine can be started only with your vehicle's original immobilizer ignition key or keyless push start system remote controller, which has an electronic identification code programmed in it. The key or remote controller communicates the identification code to the vehicle when the ignition switch is turned to "ON" position or the engine switch is pressed to change the ignition mode to ON. If you need to make spare keys or remote controllers, consult with a Maruti Suzuki authorized workshop. The vehicle must be programmed with the correct identification code for the spare. A key made by an ordinary locksmith will not work.

In the case you can start the engine, when you turn the ignition switch to "LOCK" position or press the engine switch to change the ignition mode to ON, the immobilizer system will be released and the immobilizer/keyless push start system warning light will turn on for about 2 seconds and then it will turn off.

When you turn the ignition switch to "LOCK" position or press the engine switch to change the ignition mode to LOCK (OFF), the immobilizer system will operate.

NOTICE

If the immobilizer system is modified or removed, it cannot be properly operated. Do not modify or remove the immobilizer system.

NOTE:
This immobilizer system is maintenance-free.

Immobilizer / Keyless Push Start System Warning Light

80JM122

If the immobilizer/keyless push start system warning light blinks when the ignition switch is in “ON” position or the ignition mode is ON, the engine will not start.

NOTE:
If the immobilizer/keyless push start system warning light blinks or comes on, a message may be shown on the information display.

For vehicles without a keyless push start system
If this light blinks, turn the ignition switch to “LOCK” position, and then turn it back to “ON” position.
If the light still blinks after the ignition switch is turned back to “ON” position, there may be something wrong with your key or with the immobilizer system. Ask your Maruti Suzuki authorized workshop for inspection.

For vehicles with a keyless push start system
If this light blinks, change the ignition mode to LOCK (OFF), and then change it back to ON. Also refer to “If the master warning indicator light blinks and the engine cannot be started” in “Starting / stopping engine (vehicle with keyless push start system) (if equipped)” in “OPERATING YOUR VEHICLE” section.
If the light still blinks after the ignition mode is changed back to ON, there may be something wrong with your key or with the immobilizer system. Ask your Maruti Suzuki authorized workshop for inspection.

The immobilizer/keyless push start system warning light may also blink if the remote controller is not in the vehicle when you close the door or attempt to start the engine.

NOTE:
- *If you lose your immobilizer ignition key or remote controller, ask your Maruti Suzuki authorized workshop as soon as possible to deactivate the lost one, and to make a new key or remote controller.*
- *If you own other vehicles with immobilizer keys, keep those keys away from the ignition switch or the engine switch when using your Maruti Suzuki vehicle. Otherwise, the engine may not be started because they may interfere with your Maruti Suzuki vehicle’s immobilizer system.*
- *If you attach any metal objects to the immobilizer key or remote controller, it may not start the engine.*

NOTICE

The immobilizer key and remote controller are sensitive electronic instruments. To avoid damaging them:
- **Do not expose them to impacts, moisture or high temperature such as on the dashboard under direct sunlight.**
- **Keep them away from magnetic objects.**

Ignition Key Reminder (if equipped)

A buzzer sounds intermittently to remind you to remove the ignition key if it is in the ignition keyhole when the driver’s door is opened.

Pedal

Manual transmission

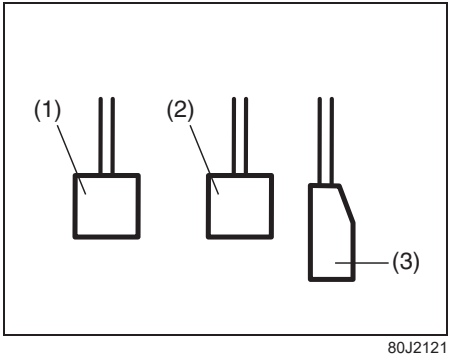

80J2121

Automatic transmission

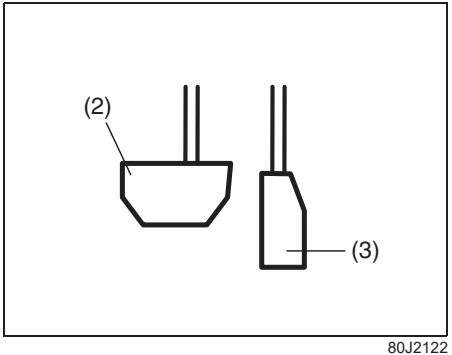

80J2122

Clutch Pedal (1)

A clutch pedal is used to disengage the driving force to the wheels when starting the engine, stopping, or shifting the gear-shift lever. Depressing the pedal disengages the clutch.

⚠ WARNING

Do not drive with your foot resting on the clutch pedal. It could result in excessive clutch wear, clutch damage, or unexpected loss of engine braking.

Brake Pedal (2)

Your vehicle is equipped with either front and rear disc brakes or front disc brakes and rear drum brakes. Depressing a brake pedal applies both sets of brakes.

You may hear occasional brake squeal when you apply the brakes. This is a normal condition caused by environmental factors such as temperature, humidity, snow or dust, etc.

⚠ WARNING

If brake squeal is excessive and occurs each time the brakes are applied, you should have the brakes checked by a Maruti Suzuki authorized workshop.

⚠ WARNING

Do not apply brakes continuously or rest your foot on the brake pedal. This will result in overheating of the brakes which could cause unpredictable braking action, longer stopping distances, or permanent brake damage.

Accelerator Pedal (3)

An accelerator pedal controls the speed of the engine. Depressing the accelerator pedal increases power output and speed.

NOTE:
Your vehicle is equipped with Brake Override System. If you depress both the accelerator pedal and the brake pedal simultaneously, the engine power output may be suppressed.

Keyless Push Start System (if equipped)

Provided the keyless push start system remote controller is within the interior workable area, you can use the engine switch for starting the engine and selecting an ignition mode (ACC or ON). In addition, the following functions can be used:

- Keyless entry function. Refer to “Keyless Push Start System Remote Controller” in “BEFORE DRIVING” section for details.
- Locking and unlocking doors (including the tailgate) using a request switch. Refer to “Keyless Push Start System Remote Controller” in “BEFORE DRIVING” section for details.
- Immobilizer (anti-theft) function. Refer to “Immobilizer System” in this section for details.

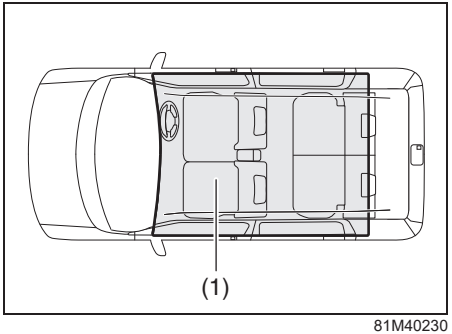

81M40230

(1) Interior workable area

The interior workable area is defined as all the interior spaces except for the space on the instrument panel or in the luggage compartment.

NOTE:

- *Even when the remote controller is in the interior workable area, if it is in any of the following conditions, you may not be able to start the engine or select the ignition modes, and the remote controller outside warning may be given.*
  - *The remote controller’s battery is low.*
  - *The remote controller is affected by strong radio wave or noise.*
  - *The remote controller is in contact with or covered by a metallic object.*
  - *The remote controller is in the secluded stowages such as the glove box or a door pocket.*
  - *The remote controller is in the sun visor pocket or on the floor.*
- *Even when the remote controller is outside the interior workable area, if it is in any of the following conditions, you may be able to start the engine or select the ignition mode. The remote controller outside warning may not be given at that time.*
  - *The remote controller is outside the vehicle but very close to a door.*
  - *The remote controller is on the instrument panel.*

Engine Switch Illumination

The engine switch is illuminated (lit) in the following situations:

- When the engine is off and the driver’s door is open, or for 15 seconds after the driver’s door is closed. The illumination will fade out after 15 seconds passed.
- While the headlights and/or the position lights are on, the illumination will turn on. The illumination will go out when the headlights and the position lights are turned off.

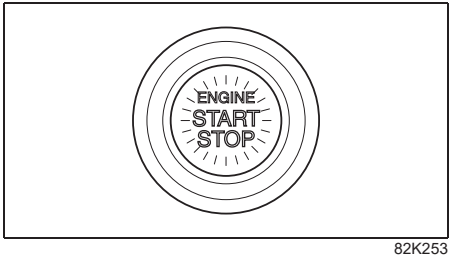

82K253

NOTE:

To save the lead-acid battery, the illumination will be automatically turned off when both of the following conditions are simultaneously met:

- *The headlights and the position lights are turned off.*
- *15 minutes has elapsed since opening the driver’s door.*

Selection of Ignition Modes

Press the engine switch to select ACC or ON mode as follows when you use an electric accessory or check the operation of instrument cluster without running the engine.

NOTE:
When selecting the ignition modes, the information display in the instrument cluster show certain messages. Refer to "Information Display" in the "INSTRUMENT CLUSTER" section.

1) Bring the keyless push start system remote controller with you and sit in the driver's seat.

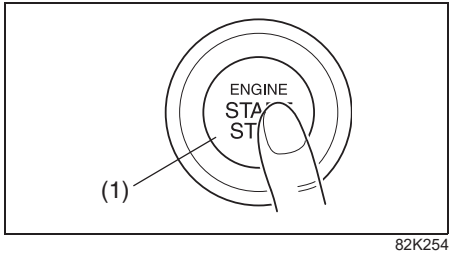

82K254

2) Manual transmission – Without depressing the clutch pedal, press the engine switch (1).
   Automatic transmission – Without depressing the brake pedal, press the engine switch (1).

Every time you press the engine switch, the ignition mode changes as follows.

Manual transmission

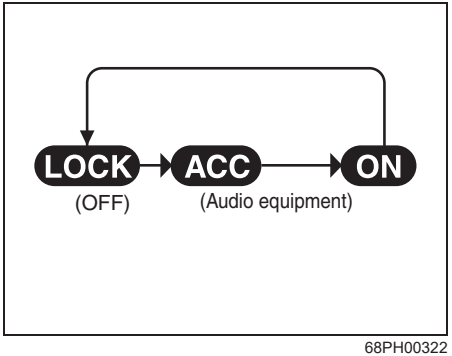

68PH00322

Automatic transmission

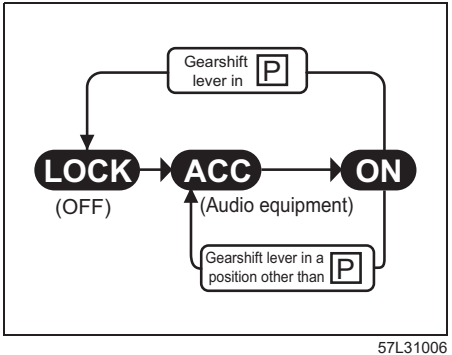

57L31006

If the master warning indicator light ⚠ blinks and the ignition modes cannot be selected

Your keyless push start system remote controller may not be sensed as being within the interior workable area (refer to the related explanation in this section). Try again after checking that you have the remote controller with you. If the ignition modes still cannot be selected, the battery of the remote controller may be discharged. To select an ignition mode, you must then use the following method:

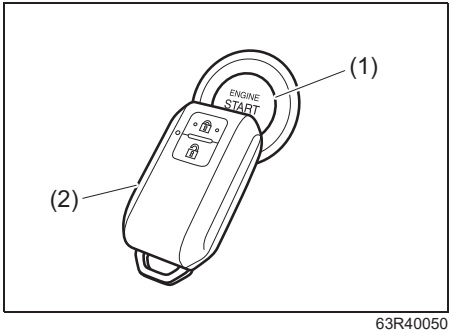

63R40050

1) Manual transmission – Without depressing the clutch pedal, push the engine switch (1).

   Automatic transmission – Without depressing the brake pedal, press the engine switch (1).

75RM217

2) Within about 10 seconds while the master warning indicator light blinks and the information display in the instrument cluster shows the following message, touch the engine switch with the lock switch end of the remote controller (2) for about 2 seconds.

While the master warning indicator light blinks, the immobilizer/keyless push system warning light will come on for about 5 seconds.

If you still cannot select the ignition modes, there may be the other problem such as the discharged lead-acid battery. In this case, consult with a Maruti Suzuki authorized workshop.

NOTE:

- *You may customize the system to cause the interior buzzer to sound once for warning that remote controller is out of sensing range. For this customization, consult with a Maruti Suzuki authorized workshop.*
- *If the battery of the remote controller is almost discharged, the information display in the instrument cluster shows the following message when you press the engine switch to change the ignition mode to ON. Refer to "Information Display" in "INSTRUMENT CLUSTER" section for details. For details on replacing the battery, refer to "Keyless Push Start System Remote Controller" in "BEFORE DRIVING" section.*

75RM220

Remote Controller Outside Warning

When either of the following conditions is met, the system causes the remote controller outside warning by sounding the interior and exterior buzzers. At the same time, the immobilizer/keyless push start system warning light comes on, the master warning indicator light blinks and the information display in the instrument cluster will show the corresponding message.

- Any door is opened and then closed while the remote controller is not inside the vehicle and the engine is running or the ignition mode has been changed to ACC or ON by pressing the engine switch.
- The remote controller is not inside the vehicle when you attempt to start the engine after changing the ignition mode to ACC or ON by pressing the engine switch.

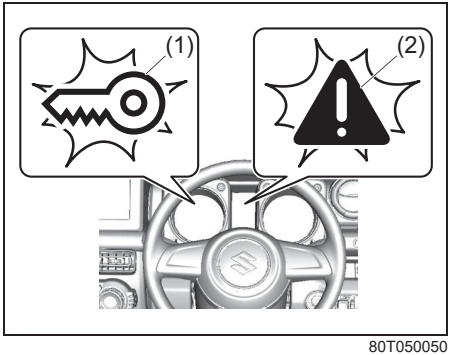

80T050050

(1) Immobilizer/keyless push start system warning light (blinks)
(2) Master warning indicator light (blinks)

If the warning is given, place the remote controller inside the vehicle as soon as possible.

- Any attempt to start the engine will fail while the warning is active. The message appearing in the information display in the instrument cluster will also indicate this condition. Refer to “Information Display” in the “INSTRUMENT CLUSTER” section for details.
- Normally, the immobilizer/keyless push start system warning light should go out and the master warning indicator light should stop blinking shortly after the remote controller is brought back inside the vehicle. If they remain lit and blinking, change the ignition mode to LOCK (OFF) by pressing the engine switch and then perform the engine starting operation. Refer to “Starting / Stopping Engine (Vehicle with Keyless Push Start System)” in this section.

NOTE:
Always keep the remote controller with you as the driver.

Starting / Stopping Engine (Vehicle without Keyless Push Start System)

Starting Engine

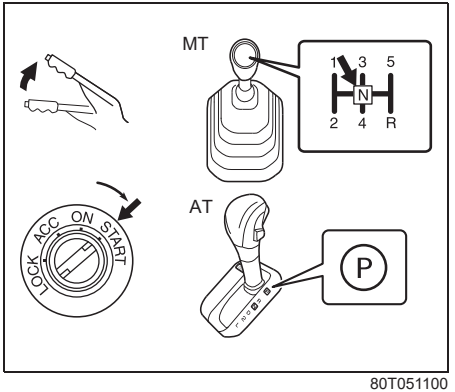

80T051100

1) Check that the parking brake is set fully.
2) Turn off such loads as the headlights and air conditioning system to facilitate starting of the engine.

3) Manual transmission vehicles:
Shift into “N” (Neutral). Hold the clutch pedal and brake pedal fully depressed.

Automatic transmission vehicles:
If the gearshift lever is not in “P” (Park) position, shift into “P” (Park). Hold the brake pedal fully depressed.

4) With your foot taken off the accelerator pedal, crank the engine by turning the ignition key to “START”. Release the key immediately after the engine has started.

NOTICE

- **For protection of a lead-acid battery and a starter motor, do not use the starter motor by turning the key to “START” for more than 12 seconds at a time. If the engine does not start, turn the key to “LOCK” position and wait for more than 30 seconds before trying again. If the engine does not start after several attempts, consult with a Maruti Suzuki authorized workshop.**
- **Automatic transmission vehicles:**
  In case that you need to restart the engine while the vehicle is moving, shift into “N”. Otherwise the engine and transmission can be damaged.

(Continued)

NOTICE

(Continued)

- **Do not try to start the engine by pushing or towing the vehicle, or coasting down a hill. This starting method could result in damage to the catalytic converter or damage to other parts.**

NOTE:
Automatic transmission vehicles:
Automatic transmission vehicles have a starter interlock device. The engine starts when the gearshift lever is in either “P” or “N” position.

Stopping Engine

⚠ WARNING

Except in cases of emergency, do not stop the engine while the vehicle is in motion. If you stop the engine while the vehicle is in motion, the steering wheel will lock and you will not be able to steer the vehicle. This may result in an accident. Avoid stopping the engine while driving.

NOTICE

Automatic transmission vehicles:
If you stop the engine while the vehicle is in motion, the automatic transmission may be damaged. Avoid stopping the engine while driving.

Starting / Stopping Engine (Vehicle with Keyless Push Start System)

Starting Engine

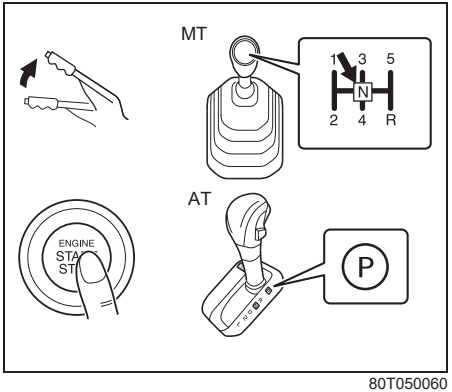

80T050060

1) Check that the parking brake is set fully.
2) Turn off such loads as the headlights and air conditioning system to facilitate starting of the engine.
3) Manual transmission vehicles:
   Shift into “N” (Neutral). Hold the clutch pedal and brake pedal fully depressed.

   Automatic transmission vehicles:
   If the gearshift lever is not in “P” (Park) position, shift into “P” (Park). Hold the brake pedal fully depressed.
4) The “PUSH START SWITCH” message will appear in the information display in the instrument cluster.

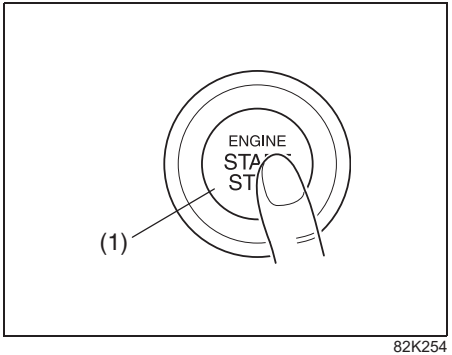

82K254

5) With your foot taken off the accelerator pedal, push the engine switch (1). When the engine is started, the starter motor will automatically stop.
   - Even if you fail to start the engine, the starter motor will stop turning automatically after approximately 12 seconds. In this case, press the engine switch to select LOCK (OFF) mode and restart the engine.
   - If there is a problem with the system, the engine will not start automatically even if the switch is pressed. In case the starter motor does not turn or stops immediately, start the engine by the following procedure.
     a. Press the engine switch to select the ON mode.
     b. Perform the above procedure 1) to 3).
     c. Keep the engine switch pressed until the engine starts. Release your finger from the engine switch after the engine has started.

NOTICE

- **If the engine does not start, press the engine switch to select LOCK (OFF) mode and wait for more than 30 seconds before trying again, for protection of a lead-acid battery and a starter motor. If the engine does not start after several attempts, consult with a Maruti Suzuki authorized workshop.**
- **Do not try to start the engine by pushing or towing the vehicle, or coasting down a hill. This starting method could result in damage to the catalytic converter or damage to other parts.**

NOTE:
- *You do not need to keep the engine switch pressed to start the engine.*
- *Manual transmission vehicles:*
  The engine of a manual transmission vehicle will not start unless the clutch pedal is depressed.
- *Automatic transmission vehicles:*
  Automatic transmission vehicles have a starter interlock device. The engine starts when the gearshift lever is in either "P" or "N" position.
- *During the engine starting procedure, messages on the information display will help you. Refer to "Information display" in "INSTRUMENT CLUSTER" section for details.*
- *When the engine stalls in intersection and railway crossing etc., restart the engine by usual procedure.*

Stopping Engine

- Depress the engine switch to stop the engine after the vehicle stopped completely.
- If the engine remains stopped for a while after it was stopped unexpectedly or was raced before stopping, a clicking sound may be heard from around the engine when it is restarted. This is not a malfunction. Always let the engine idle before stopping it.

⚠ WARNING

Except in cases of emergency, do not stop the engine while the vehicle is in motion. If you stop the engine while the vehicle is in motion, the steering wheel will lock and you will not be able to steer the vehicle. This may result in an accident. Avoid stopping the engine while driving.

NOTICE

Automatic transmission vehicles:
If you stop the engine while the vehicle is in motion, the automatic transmission may be damaged. Avoid stopping the engine while driving.

Emergency Stop

In case of emergency, you can stop the engine by quickly pushing the engine switch more than 3 times, or pushing and holding the engine switch for more than 2 seconds while the vehicle is in motion.

NOTE:
Except in cases of emergency, do not stop the engine while the vehicle is in motion. The steering and braking operation will require more effort when the engine is stopped. Refer to "Braking" in this section.

If the Master Warning Indicator Light ⚠ Blinks and the Engine cannot be Started

Your keyless push start system remote controller may not be sensed as being within the interior workable area (refer to the related explanation in this section). Try again after checking that you have the remote controller with you. If the engine cannot be started, the battery of the remote controller may be discharged. To start the engine, you must then use the following method:

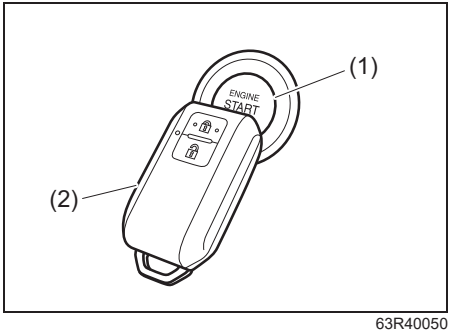

63R40050

1) Check that the gearshift lever is in “P” (Park) position and keep depressing the brake pedal fully.

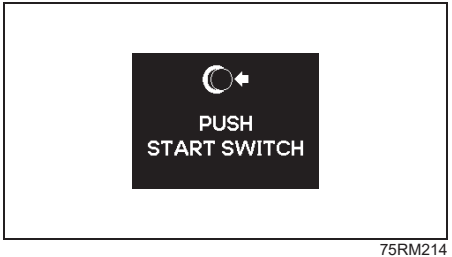

75RM214

2) If the above message is shown on the information display in the instrument cluster, press the engine switch (1).

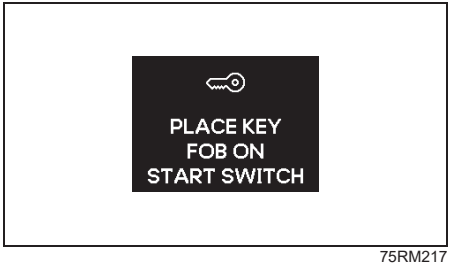

75RM217

3) Within about 10 seconds while the master warning indicator light blinks and the information display in the instrument cluster shows the following message, touch the engine switch with the lock switch end of the remote controller (2) for about 2 seconds.

While the master warning indicator light blinks, the immobilizer/keyless push system warning light will come on for about 5 seconds.

If you still cannot start the engine, there may be the other problem such as the discharged lead-acid battery. In this case, consult with a Maruti Suzuki authorized workshop.

NOTE:

- *You may customize the system to cause the interior buzzer to sound once for warning that remote controller is out of sensing range. For this customization, consult with a Maruti Suzuki authorized workshop.*

- *If the battery of the remote controller is almost discharged, the information display in the instrument cluster shows the following message when you press the engine switch to change the ignition mode to ON. Refer to "Information Display" in "INSTRUMENT CLUSTER" section for details. For details on replacing the battery, refer to "Keyless Push Start System Remote Controller" in "BEFORE DRIVING" section.*

75RM220

Returning Ignition Mode to LOCK (OFF)

Automatic transmission – To ensure safety, the ignition mode can be returned to LOCK (OFF) by pressing the engine switch only when the gearshift lever is placed in "P" position without pressing the knob button.

NOTE:
In the case of an automatic transmission, the ignition mode cannot be returned to LOCK (OFF) position if the gearshift lever is in any other position than "P".
Certain problems such as a fault in engine system may prevent the engine switch from going back to LOCK (OFF) mode. If this happens, have the vehicle inspected by a Maruti Suzuki authorized workshop after doing the following:

- *Lock the doors using the key to prevent theft. (The request switches and the keyless push start system remote controller cannot be used to lock them.)*
- *Disconnect the negative cable from the lead-acid battery to prevent discharge.*

LOCK (OFF) mode reminder buzzer
If the driver's door is opened without returning the ignition mode to LOCK (OFF) by pressing the engine switch, a buzzer sounds to warn you of this condition.

- If you open the driver's door after pressing the engine switch to change the ignition mode to ACC, the interior buzzer beeps intermittently.
- The buzzer will stop sounding if you then push the engine switch twice, thus bringing it back the ignition mode to LOCK (OFF).

NOTE:
Whenever you leave the vehicle, check that you have returned the ignition mode to LOCK (OFF) using the engine switch and then lock the doors. Without returning the ignition mode to LOCK (OFF), you cannot use a request switch or keyless push start system remote controller to lock the doors.

Steering lock warning buzzer
If the steering lock fails to engage due to a fault in the system when the ignition mode is turned to LOCK (OFF) by pressing the engine switch and any door (including the tailgate) is opened or closed, the interior buzzer will warn you of this condition with repeated short beeps. If this happens, have your vehicle inspected by a Maruti Suzuki authorized workshop.

ENG A-STOP System (Engine Auto Stop Start System)

The ENG A-STOP system (engine auto stop start system) automatically stops the engine while waiting briefly at a traffic light, etc., and automatically restarts the engine afterward. This system helps reduce emissions, improve fuel consumption and lower engine noise.

This system stops the engine temporarily under specific conditions. Before parking the vehicle for an extended period of time or leaving the vehicle, properly apply the parking brake and stop the engine with the engine switch.

Once the specific conditions are met, the engine will stop automatically after the vehicle has stopped. However, the engine will not be stopped automatically until confirmation of the system function is finished.

NOTE:
If your vehicle is equipped with automatic heating and air conditioning system, you can change the automatic engine stop condition via the information display. Refer to "Information display" in "INSTRUMENT CLUSTER" section.

⚠ WARNING

- **Do not get out of the vehicle while the engine is automatically stopped by the ENG A-STOP system. Doing so may lead to an accident.**
- **If the engine does not restart automatically after having been stopped automatically by the ENG A-STOP system, push the engine switch to start the engine. Trying to move the vehicle when the engine has not yet restarted requires a strong force to turn the steering wheel or depress the brake pedal, potentially leading to an accident.**

NOTICE

The vehicle equipped with this system uses a dedicated high-performance battery that supports ENG A-STOP system. Accordingly, observe the instructions listed below. If these instructions are not observed, the system may not actuate properly or the battery may die prematurely.

- **When replacing the battery, use a Maruti Suzuki genuine battery specified in the Specification.**
- **Do not draw power from the battery terminals for electrical products.**

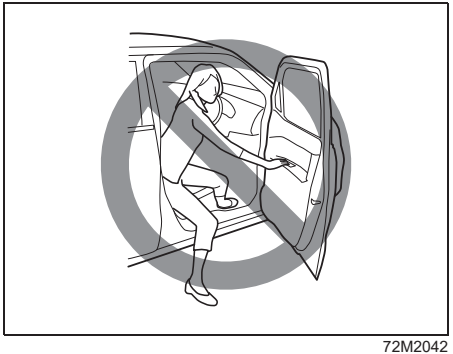

72M2042

NOTE:
- *Manual transmission vehicle – If the driver's seat belt is unfastened and the driver's door is opened, the engine will stall.*
- *Automatic transmission vehicle – If the driver's seat belt is unfastened, even if the brake pedal is pressed down, or the driver's door is opened, the engine will be restarted to warn you that the engine was stopped automatically by the ENG A-STOP system.*

Automatic Stopping / Restarting of the Engine

Manual transmission vehicle

1) With the brake pedal depressed, decelerate the vehicle.

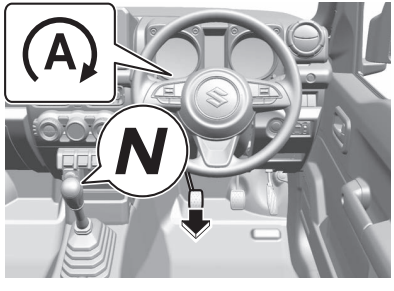

77R40690

2) After the vehicle has stopped with the clutch pedal depressed and the gearshift lever shifted to “N”, and then release the clutch pedal, the engine will stop automatically. The ENG A-STOP indicator light (green) will come on.

- The ENG A-STOP system will not stop the engine automatically if all the automatic engine stop conditions are not met. For details, refer to “Conditions to stop the engine automatically” in this section.
- During the automatic engine stop, the engine may shut down, accompanied by an interior buzzer or restarted, to ensure safety.

For details, refer to “Precautions of When the Engine is Stopped Automatically” in this section.

NOTICE

- **During the automatic engine stop, do not shift the gearshift lever to a position other than “N” without depressing the clutch pedal. If the gearshift lever is in a position other than “N”, the engine will not restart automatically even if the clutch pedal is depressed.**
- **If the driver unfastens the seat belt, the engine does not restart automatically even if the clutch pedal is depressed. Also a buzzer will sound to alert the driver. In this case, fasten the seat belt.**

NOTE:
During the automatic engine stop, electric equipment will be in the following conditions:

- *The audio and other electrical component can be used during the automatic engine stop, but the air conditioner will switch to the fan mode.*
- *If the vehicle is equipped with automatic heating and air conditioning system, the fan speed will be limited during the automatic engine stop (only in the auto control mode) to keep the cabin air-conditioned for a longer time.*
- *If the engine stalled by a rapid clutch operation, the engine will restart with the gear positioned “N” (neutral) and the clutch pedal depressed.*

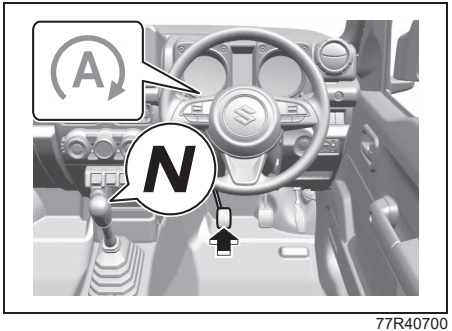

77R40700

3) Regardless of whether the vehicle has stopped or not, depressing the clutch pedal will restart the engine and ENG A-STOP indicator light (green) will go off.

While the engine is stopped automatically, depressing the clutch pedal will restart the engine consuming fuel. Therefore, for fuel economy, it is recommended to depress the clutch pedal just before the vehicle start.

- Without depressing the clutch pedal, the engine may restart automatically if the automatic engine restart conditions are met.

For details, refer to “Conditions to restart the engine automatically” in this section.

Automatic transmission vehicles

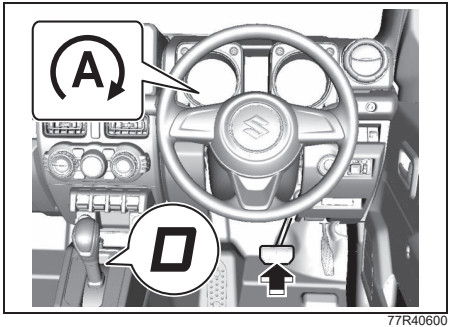

77R40600

1) The engine will stop automatically if you stop the vehicle by depressing the brake pedal with the gearshift lever is in the “D” or “N” position. After the engine is stopped automatically, the idling stop indicator light (green) will come on.
   - The ENG A-STOP system will not stop the engine automatically if all the automatic engine stop conditions are not met. For details, refer to “Conditions to restart the engine automatically” in this section.
   - During the automatic engine stop, the engine may shut down, accompanied by an interior buzzer or restarted, to ensure safety.

NOTE:

- *The engine is not stopped automatically when decelerating without depressing the brake pedal, for example, by using engine braking.*
- *Electrical components, such as the navigation system or the audio system, can be used while the engine has been stopped automatically, however, the air conditioner switches to the ventilation position.*
- *For the automatic heating and air conditioning system, airflow is limited (only under automatic operation) when the engine is stopped automatically, in order to improve the cooling and heating performance.*

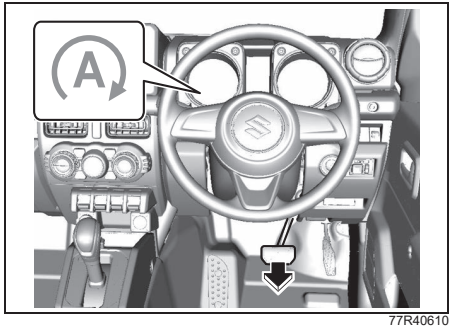

77R40610

2) When you remove your foot from the brake pedal, the engine is restarted and the ENG A-STOP indicator light (green) goes off.
   - The engine is restarted automatically if the conditions to restart the engine automatically are met, even if the brake pedal is depressed.
     For details on the conditions for automatically restarting the engine, refer to “Conditions to restart the engine automatically” in this section.
   - When restarting the engine, you can prevent the vehicle from creeping ahead and rolling downward on an uphill slope, by keeping force on the brake pedal temporarily.

NOTE:
- *The hill hold control system is activated when the engine is restarted automatically.*
- *If a sound of audio system is loud, the sound may be interrupted when the engine is restarted. This is not a malfunction.*

Precautions of When the Engine is Stopped Automatically

⚠ WARNING

Do not perform any of the following operations while the engine has been stopped automatically. This may result in an accident.

	Operation/Vehicle Condition	Solution
Common	Engine hood opened • The interior buzzer sounds 2 times. • After the engine is stopped automatically, it stalls. • The ENG A-STOP indicator light (green) goes off.	To restart the engine, follow the procedure below. 1) Set the parking brake firmly, and then place the gearshift lever in the “N” position (for manual transmission) or “P” position (for automatic transmission). 2) Securely close the engine hood. 3) Turn the ignition switch or press the engine switch to restart the engine.
Manual transmission	Driver’s seat belt unfastened and driver’s door opened • The interior buzzer sounds 5 times. • After the engine is stopped automatically, it stalls. • The ENG A-STOP indicator light (green) goes off.	Before starting the vehicle, close the door and buckle the seat belt. In addition, before getting out of the vehicle, follow the procedure below. 1) Set the parking brake firmly, and then place the gearshift lever in the “N” position. 2) When the vehicle will be stopped for a long time or when you will leave the vehicle unattended, turn the ignition switch or the press the engine switch to stop the engine.
	Gearshift lever shifted to a position other than “N” without depressing the clutch pedal • The interior buzzer sounds 2 times. • After the engine is stopped automatically, it stalls. • The ENG A-STOP indicator light (green) goes on.	The gearshift lever is placed returned to the “N” position.

	Operation/Vehicle Condition	Solution
Automatic transmission	Driver's seat belt unfastened, or driver's door opened • The interior buzzer sounds 10 times. • The engine is restarted automatically. • The ENG A-STOP indicator light (green) blinks 5 times, then goes off.	Before driving, close the door and buckle the seat belt. In addition, before getting out of the vehicle, follow the procedure below. 1) Set the parking brake firmly, and then place the gearshift lever in the "P" position. 2) When the vehicle will be stopped for a long time or when you will leave the vehicle unattended, turn the ignition switch or press the engine switch to stop the engine.

NOTE:
The following indicator lights in the instrument cluster do not come on when the engine is stopped automatically.
- *Malfunction indicator light, electric power steering light, oil pressure light, charging light*

Operating Conditions of ENG A-STOP System

Standby conditions

If all of the following conditions are met while driving, the automatic engine stop will be permitted.

When the engine is started*

Common	• The engine is started with the engine hood securely closed.

*: If the engine is started according to the procedures for the Jump-starting Instructions in “EMERGENCY SERVICE” section, the standby conditions are not met.

When driving

Common	• The ENG A-STOP system is not deactivated (OFF) (For details, refer to “ENG A-STOP OFF Switch” in this section.) • The battery is charged more than a certain amount, and the temperature inside the battery is within the specified range (#1) • The engine coolant temperature is within the specified range • The driver’s seat belt is fastened • The driver’s door is securely closed • The engine hood is securely closed • There is no signal to prevent stopping the engine from any electronic control systems other than the ENG A-STOP system (#2) • The transfer lever is in “2H” position <Automatic heating and air conditioning system> • The air from the outlets is sufficiently cooled while cooling or sufficiently warmed while heating. • The defroster is turned off.
Manual transmission	• The gearshift lever is not in “R” position
Automatic transmission	• The gearshift lever is in the “D” or “N” position. • The overdrive OFF switch light goes off.

#1: If the battery is discharged, for example, if the vehicle has not been used for a long time or electrical components, such as the navigation system or audio system, have been used for a long time while the engine was stopped, it may take some time until the system can be in standby.

#2: If any of the warning and indicator lights affecting the ENG A-STOP system come on, the engine will not be stopped automatically.

Conditions to stop the engine automatically

If all of the following conditions, the ENG A-STOP indicator light (green) in the instrument cluster will illuminate when the vehicle is stopped and the engine will stop automatically.

Common	• The ABS or ESP® system has not been activated • Brake booster vacuum pressure is normal
Manual transmission	• The gearshift lever is in “N” position • The clutch pedal is released
Automatic transmission	• The brake pedal is sufficiently depressed (#) • The accelerator pedal is not depressed • The vehicle is not stopped on a steep hill

#: The engine may not be stopped automatically if the brake pedal was depressed lightly or strongly.
The engine may not stop automatically when the brake pedal is depressed lightly.
In this case, when the brake pedal is depressed additionally, the engine may stop automatically.
The driver can operate whether the engine stops automatically or not depending on how hard the brake pedal is pressed.

Conditions to restart the engine automatically

If any of the following vehicle conditions occur or operations are performed while the engine is stopped automatically, the engine is restarted automatically and the ENG A-STOP indicator light (green) goes off.

Common	• The ENG A-STOP system is deactivated (OFF) • The battery continues to be discharged (#1) • A malfunction was detected in this system (#1) • The negative pressure of the brake booster has dropped (#1) • The vehicle starts to move on a slope, etc. (#1) • Some time (2 minutes or so) has elapsed after the start of the automatic engine stop (#1) • Shift the transfer lever into “4H” or “4L” position (#1) <Automatic heating and air conditioning system> • The temperature of the air from the air conditioner outlets changes greatly after the automatic engine stop, or the cooling and heating performance is insufficient (#1) • The temperature selector was greatly set toward COOL while cooling or greatly set toward HOT while heating (#1) • The defroster is turned on (#1)
Manual transmission	• The clutch pedal is depressed.
Automatic transmission	• The driver releases the seat belt (#1, #2) • The driver’s door is opened (#1) • The foot is removed from the brake pedal (#2) • The accelerator pedal is depressed • The gearshift lever is placed in the “P”, “R”, “L” or “2” position, or push the overdrive off switch and release the overdrive • After the gearshift lever is placed in the “N” position, it is returned to the “D” position

#1:The ENG A-STOP indicator light (green) will blink and then go off

#2:The interior buzzer sounds intermittently (5 times).

#3:If the brake pedal is not fully depressed, the engine may be restarted automatically. The engine may not be stopped automatically when the brake pedal is depressed lightly, but the engine is stopped automatically by further depressing the brake pedal. The driver can operate whether idling stop is performed or not depending on how much the brake pedal is depressed.

ENG A-STOP OFF Switch

The ENG A-STOP system can be deactivated.

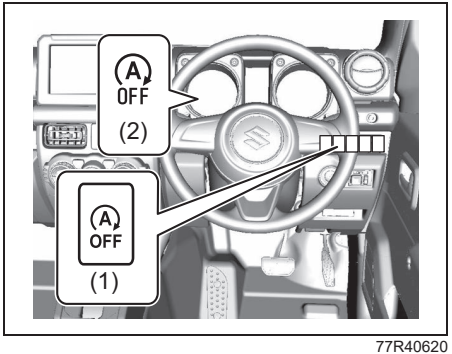

77R40620

- To deactivate the system, press the ENG A-STOP OFF switch (1) to turn on ENG A-STOP OFF light (2).
- To activate the system once again, press the switch (1) again to turn off the indicator.
- Every time the engine is stopped manually, the system is enabled again and the ENG A-STOP OFF light (2) goes off.

NOTE:
Pressing the ENG A-STOP OFF switch (1) during the automatic engine stop will restart the engine automatically and the ENG A-STOP OFF light (2) will come on.

ENG A-STOP OFF Indicator Light

- When you push the ENG A-STOP OFF switch, this light comes on.

56RM03012

- The ENG A-STOP OFF indicator light (orange) in the speedometer comes on or blinks in the following cases as well, and not only to warn you that the ENG A-STOP system is deactivated. If it blinks, have the vehicle inspected by a Maruti Suzuki authorized workshop.
  – If the system is operating normally when the engine switch is pressed to change the ignition mode to ON, the indicator light comes on for approximately 2 seconds, then goes off.
  – If there is something wrong with the system, or if it is time to replace the engine component (starter motor) or the lead-acid battery, the indicator light will blink when the engine switch is pressed to change the ignition mode to ON. (The ENG A-STOP system will not work properly.)

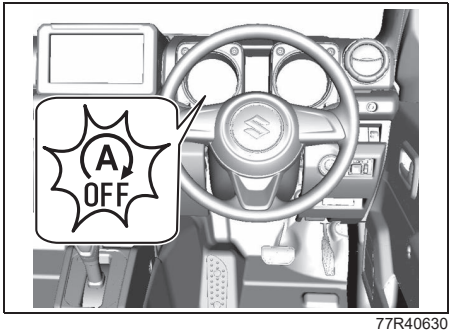

77R40630

NOTE:
If the indicator light blinks when the engine has stopped automatically by the ENG A-STOP system, the engine may restart or stall.

Air Conditioning System Settings by ENG A-STOP System

When using the automatic heating and air conditioning system while the engine is stopped automatically by the ENG A-STOP system, you can select the settings via the setting mode of the information display.
For details on how to use the information display, refer to “Setting Mode” of “Information Display” in the “INSTRUMENT CLUSTER” section.

Parking Brake Lever

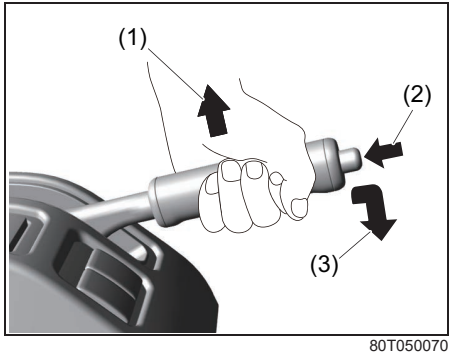

80T050070

(1) To set
(2) To release
(3) To release

The parking brake lever is located between the front seats. To set the parking brake, depress the brake pedal and pull the parking brake lever all the way up. To release the parking brake, depress the brake pedal and pull up slightly on the parking brake lever, push the button on the end of the lever with your thumb, and lower the lever to its original position.

⚠ WARNING

- **Never drive your vehicle with the parking brake on: rear brake effectiveness can be reduced from overheating, brake life may be shortened, or permanent brake damage may result.**
- **If the parking brake does not hold the vehicle securely or does not fully release, have your vehicle inspected by a Maruti Suzuki authorized workshop.**
- **Always set the parking brake fully before leaving your vehicle or it may move, causing injury or damage. When parking, check that the gearshift lever is in one of the following positions:**
  - **1st gear or “R” (Reverse) for manual transmission vehicles.**
  - **“P” (Park) for automatic transmission vehicles.**

Remember, even though the transmission is in gear or in Park, you must set the parking brake fully.

(Continued)

⚠ WARNING

(Continued)

- **When parking the vehicle in extremely cold weather, the following procedure should be used:**
  1) **Set the parking brake.**
  2) **Manual transmission – turn off the engine, then shift into reverse or first gear.**
     Automatic transmission – shift into "P" (Park) and turn off the engine.
  3) **Get out of the vehicle and put chocks under the wheels.**
  4) **Release the parking brake.**
     When you return to your vehicle, first set the parking brake, and then remove the wheel chocks.
- **Do not leave cigarette lighters, spray cans, soft drink cans or plastic articles (such as glasses, CD cases, etc.) in sun-heated vehicle. The temperature inside the vehicle may cause as follows:**
  - **Gas may leak from a cigarette lighter or spray can and may lead to a fire.**
  - **The glasses, plastic cards or CD cases, etc. may deform or crack.**
  - **Soft drink cans may fracture.**

Parking Brake Reminder Buzzer

A buzzer sounds intermittently to remind you to release the parking brake if you start the vehicle without fully releasing the parking brake. Check that the parking brake is fully released and the brake system warning light turns off.

Precaution for Parking

When Moving the Vehicle

When moving the vehicle, start the engine.

⚠ WARNING

If you coast with the engine off, stronger force than normal is required when turning the steering wheel or depressing the brake pedal, resulting in an accident.
Do not coast on a downhill slope with the engine off.

When Taking a Nap in the Vehicle

69RHS172

Do not take a nap in the vehicle with the engine running.

⚠ WARNING

- **Exhaust gases can enter the vehicle due to surrounding conditions and wind direction, possibly causing carbon monoxide poisoning.**
- **The gearshift lever could change unintentionally, or the accelerator pedal could be depressed accidentally, causing an accident.**
- **If you were to accidentally step on the accelerator pedal while you are asleep, the engine and the exhaust system could overheat, resulting in danger of fire.**

With the Engine Running, the Cooling Fan (Radiator Fan) may Rotate Suddenly

The cooling fan (radiator fan) in the engine compartment may automatically stop and rotate depending on the conditions of the engine coolant temperature.

⚠ WARNING

If you get close to a rotating cooling fan (radiator fan), your hands, hair and clothing may get caught in it, resulting in personal injury.
With the engine running, even when the cooling fan (radiator fan) stops, it may automatically rotate. Therefore, do not get close to the cooling fan (radiator fan).

When You Park the Vehicle Outside on a Snowy Day

⚠ WARNING

- **When you park the vehicle under the eaves or the trees, fallen snow may hit the vehicle's roof and it may be dented.**
  Do not park the vehicle under the eaves or the trees on a snowy day.
- **If you park the vehicle outside on a snowy day, the wiper arms may be deformed and the wiper blades may be frozen on the windshield, because of the weight of snow.**
  When you park the vehicle outside, raise the wiper arms.

Do not Park the Vehicle Near Flammable Materials

69RHS174

⚠ WARNING

If you park the vehicle near flammable materials, the exhaust pipes and exhaust gas will get hot, resulting in danger of fire.
Do not park the vehicle near flammable materials such as dry grass, paper waste and plywood.

When Leaving the Vehicle, Stop the Engine and Lock Doors

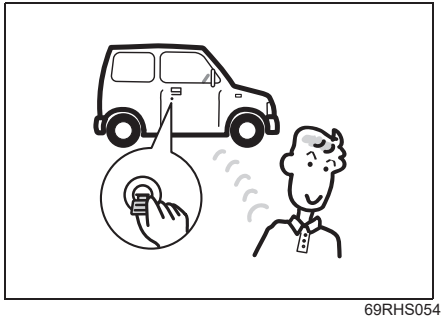

69RHS054

Even when leaving the vehicle for a short time, do not leave cash or valuables inside, as there is a risk of theft.

⚠ WARNING

If you leave the vehicle unattended with the engine running, problems such as fire or theft can occur.
Do not leave the vehicle unattended with the engine running.

Do not Leave the Computer and the Mobile Phone in the Vehicle

There is the possibility of theft, or these items could become damaged due to moisture, humidity or temperature change.

Do not Leave Lighters and Eyeglasses in the Vehicle

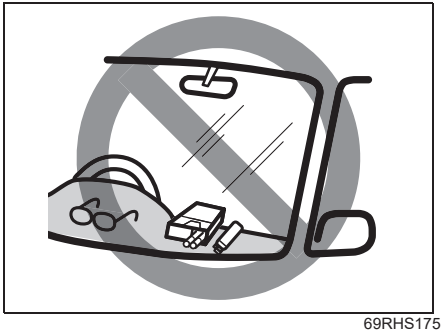

69RHS175

⚠ WARNING

- **As the inside of the vehicle becomes hotter when parking in areas where strong sunlight causes increased temperature, there is the danger of spontaneous ignition of lighters or spray cans, fire due to explosion, the deformation or cracking of eyeglasses, plastic cards or CD cases, or the rupture of carbonated beverage cans. When parking in those areas, do not leave lighters, spray cans, plastic products (eyeglasses, plastic cards, CD cases, etc.) or carbonated beverage cans in the vehicle.**
- **When items get pushed around or when the seats are moved, it is possible that gas could escape and lead to a fire. Do not place accessories such lighters or spray cans with exposed operating parts in the glove box, in storage compartments, between the seats, on the floor, etc.**

Using Transmission

⚠ WARNING

Do not hang any items on the gearshift lever and do not use the gearshift lever as a handrest. Otherwise, it could prevent proper operation of the gearshift lever and cause its malfunction, resulting in an accident.

Manual Transmission

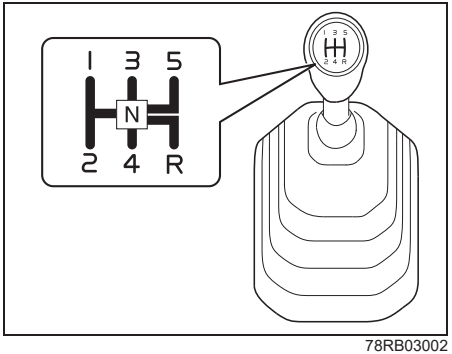

78RB03002

Starting off

To start off, depress the clutch pedal all the way to the floor and shift into 1st gear. After releasing the parking brake, gradually release the clutch. When you hear a change in the engine's sound, slowly press the accelerator while continuing to gradually release the clutch.

Shifting

All forward gears are synchronized and provide quiet and easy shifting. Always depress the clutch pedal all the way to the floor before shifting gears. Keep the engine speed from rising into the red zone of the tachometer.

Downshifting maximum allowable speeds

Transfer lever in "2H" or "4H" position

Downshifting	km/h
2nd to 1st	20 (12)
3rd to 2nd	80 (49)
4th to 3rd	115 (71)
5th to 4th	160 (99)*

Transfer lever in "4L" position

Downshifting	km/h
2nd to 1st	10 (6)
3rd to 2nd	40 (24)
4th to 3rd	55 (34)
5th to 4th	80 (49)*

**NOTE:*
You may not accelerate to the maximum allowable speed because of the driving situation and/or the vehicle condition.

NOTICE

Do not downshift to a lower gear at the speed faster than the maximum allowable speeds for the next lower speed, or severe damage to engine and transmission can result.

⚠ WARNING

- **Reduce your speed and downshift to a lower gear before going down a long or steep hill. A lower gear will allow the engine to provide braking. Avoid riding the brakes or they may overheat, resulting in brake failure.**
- **When driving on slippery roads, slow down before downshifting. Excessive and/or sudden changes in engine speed may cause loss of traction, which could cause you to lose control.**

NOTICE

- **Check that the vehicle is completely stationary before you shift into reverse.**
- **To help avoid clutch damage, do not use the clutch pedal as a footrest while driving or use the clutch to keep the vehicle stationary on a slope. Depress the clutch fully when shifting.**
- **When shifting or starting off, do not race the engine. Racing the engine can shorten engine life and cause negative effect to smooth shifting.**

NOTE:
If it is difficult to engage reverse gear [R], follow below procedure.
- *Put gear lever in neutral [N] position.*
- *Release clutch pedal once.*
- *Again depress the clutch pedal and shift from [N] to [R].*

Automatic Transmission

Gearshift lever

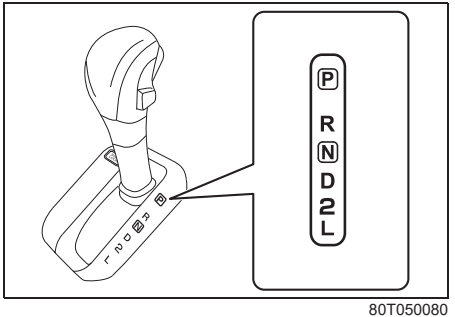

80T050080

The gearshift lever is designed so that it cannot be shifted out of “P” position unless the ignition switch is in “ON” position and the brake pedal is depressed.

Use the gearshift lever positions as follows:

P (Park)
Use this position to lock the transmission when the vehicle is parked or when starting the engine. Shift into Park only when the vehicle is completely stationary.

R (Reverse)
Use this position to reverse the vehicle from stop. Make sure that vehicle is completely stationary before shifting into Reverse.

N (Neutral)
Use this position for starting the engine if the engine stalls and you need to restart it while the vehicle is moving. You may also shift into Neutral and depress the brake pedal to hold the vehicle stationary during idling.

D (Drive)
Use this position for all normal driving.

With the gearshift lever in “D” range you can get an automatic downshift by pressing the accelerator pedal. The higher the vehicle speed is, the more you need to press the accelerator pedal to get a downshift.

2 (Low 2)
Use this position to provide extra power when climbing hills, or to provide engine braking when going down hills.

L (Low 1)
Use this position to provide maximum power when climbing steep hills or driving through deep snow or mud, or to provide maximum engine braking when going down steep hills.

⚠ WARNING

Always depress the brake pedal before shifting from “P” (Park) (or “N” (Neutral) if the vehicle is stationary) to a forward or reverse gear, to help prevent the vehicle from moving unexpectedly when you shift.

⚠ CAUTION

For the vehicles with the keyless push start system, if you cannot press the engine switch firmly, the engine may not start.
Even if you shift the gearshift lever into “R” or “D” position without the engine running, the vehicle does not move.
If you try to move your vehicle under the above-mentioned condition, the vehicle may move in unexpected directions on a slope, etc. This may cause an accident. When starting the engine, press the engine switch firmly. Also, make sure that the engine is running by checking engine sound or warning and indicator lights.

NOTE:
When you shift the gearshift lever into “P” and stop the engine before depressing the parking brake pedal, if you try to restart the engine and shift the gearshift lever into the position other than “P”, it may reduce gearshift lever capability, or unusual sound and shock may occur. However, this is not abnormal.

The gearshift lever has a lock mechanism to help prevent accidental shifting. Shift the gearshift lever as follows:

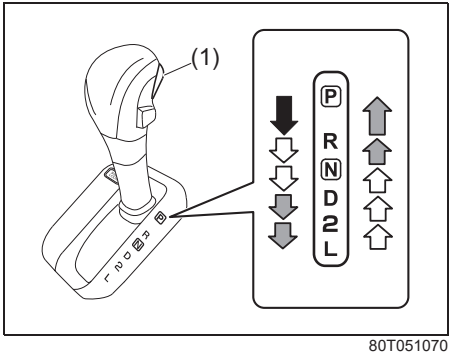

80T051070

(1) knob button

⬇	Shift with the knob button (1) pushed in and the brake pedal depressed.
⇧ ⇩	Shift with the knob button (1) pushed in.
⇧ ⇩	Shift without the knob button (1) pushed in.

NOTICE

- **Do not shift the gearshift lever into "R" while moving forward, or the transmission may be damaged. If you shift into "R" when the vehicle speed is over 10 km/h, the transmission will not shift into reverse.**
- **Be sure to take the following precautions to help avoid damage to the automatic transmission:**
  - **Make sure that the vehicle is completely stationary before shifting into "P" or "R".**
  - **Do not shift from "P" or "N" to "R", "D" or "L" when the engine is running above idle speed.**
  - **Do not rev the engine with the transmission in a drive position ("R", "D" or "L") and the front wheels not moving.**
  - **Do not use the accelerator to hold the vehicle on a hill. Use the vehicle's brakes.**

NOTE:

- *Always shift the gearshift lever without pushing in the knob button except when you shift from "P" to "R", from "D" to "2", from "2" to "L", from "N" to "R" or from "R" to "P". If you always push in the knob button when shifting the gearshift lever, you could shift into "P", "R", "2" or "L" by mistake.*
- *If driver's or passenger's knee hits the gearshift lever while driving, the lever could move and the gear could be changed unexpectedly.*

Overdrive off switch

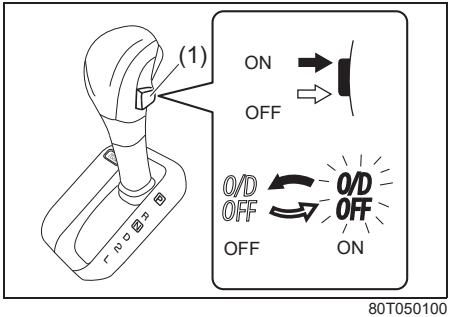

80T050100

(1) Overdrive off switch

The transmission is a 4-speed (3-speed plus overdrive) automatic transmission. By operating the overdrive off switch, the transmission can be converted to a 3-speed automatic transmission that will not move to the overdrive position. To convert the transmission to the 3-speed mode, push in the overdrive off switch and release it.

To return the transmission to the 4-speed mode, push in the overdrive off switch again.

When the ignition switch is turned to the "ACC" position, the transmission in the 3-speed mode is converted to the 4-speed mode automatically.
The 3-speed mode is suitable for the following driving conditions:

- Driving on hilly, winding roads
  - You can drive more smoothly with less frequent gear changing
- Going down a steep hill
  - Some engine braking is provided

If you cannot Shift Automatic Transmission Gearshift Lever out of "P" (PARK)

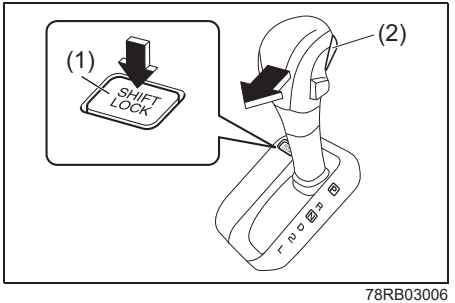

78RB03006

The automatic transmission vehicles have an electrically operated park-lock feature. If the vehicle's lead-acid battery is discharged, or there is some other electrical failure, the automatic transmission cannot be shifted out of Park in the normal way. Jump starting may correct the condition. If not, follow the procedure described below. This procedure will permit shifting the transmission out of Park.

1) Be sure the parking brake is firmly applied.
2) If the engine is running, stop the engine.
3) Make sure the key is in "ON" or "ACC" position.
4) With the release button (1) pushed, push the knob button (2) and shift the gearshift lever to the desired position.

This procedure is for emergency use only. If repeated use of this procedure is necessary, or the procedure does not work as described, take the vehicle to a Maruti Suzuki authorized workshop for repair.

Gearshift Indicator (if equipped)

52RM30410

In the following cases, the gearshift indicator is indicated in the information display when the ignition switch is in "ON" position.

- When the gearshift lever is in a position other than "N" (Neutral).
- When the transfer lever is in "2H" or "4H" position.
- For vehicles equipped with the cruise control, when the system is not in use.

The electronic control system monitors driving condition (such as vehicle speed and/or engine revolution), and it shows which gear position is optimal for your driving with the indication on the display.

If UP/DOWN arrow is indicated in the display while driving, we recommend you to shift up or down the gear. It is the optimal gear position for a driving condition that reduces the over revolution and stress to the engine, and improves fuel consumption.

⚠ WARNING

The gearshift indicator is designed to indicate optimal gear position for your driving, however, a driver will not be relieved from the duty of care of driving operation or gear change with this indicator.
To drive safe, do not gaze the gearshift indicator, pay attention to your driving situation and shift up or down if necessary.

NOTE:
- *The gearshift indicator is not indicated when the gear position is in “N” (Neutral).*
- *If you depress the clutch pedal while UP/DOWN arrow is indicated, the indication will disappear.*
- *In ordinary driving, UP arrow will disappear when you release your foot from the accelerator pedal.*
- *The indication of gearshift indicator timing may differ depending on the vehicle condition and/or driving situation even in the same vehicle speed and engine revolution.*
- *If any of the electrical systems such as ESP® system is working, the gearshift indicator will disappear temporarily.*

Example of the gearshift indicator

Indication	Description
▲	Lower gear position is selected for the vehicle speed and/or engine revolution. Changing to a higher gear position is recommended. • In this case, shifting up is recommended.
▼	Higher gear position is selected for the vehicle speed and/or engine revolution. Changing to a lower gear position is recommended. • In this case, shifting down is recommended.

Transfer Lever

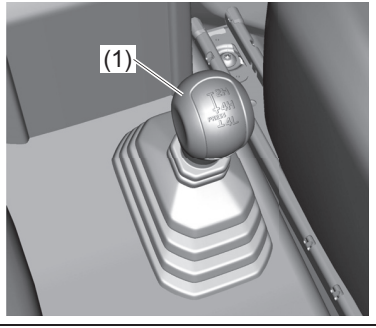

78RB03022

(1) Transfer lever

Your vehicle is equipped with the “ALL GRIP PRO” system that consists of a transfer case with a synchronizer (between 2WD-high and 4WD-high positions) and the air locking hubs. With this feature, you can shift the drive mode between 2-wheel drive high range and 4-wheel drive high range by shifting the “2H” or “4H” position. Stop the vehicle or reduce the speed to less than 100 km/h with the front wheels in the straight ahead position. Do not shift the transfer lever without depressing the accelerator pedal. Do not activate the cruise control system when shifting the transfer lever.

Free axle mechanism

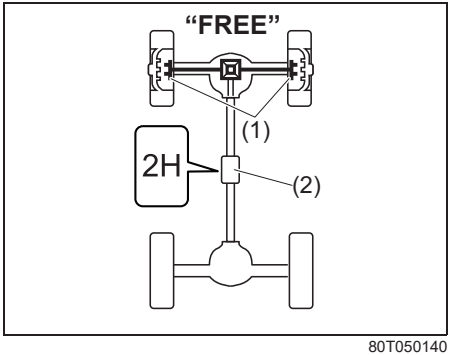

80T050140

Fixed axle mechanism

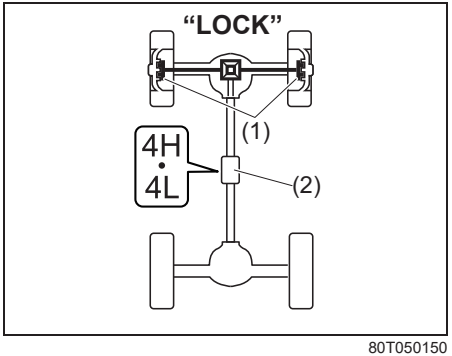

80T050150

(1) Air locking hubs
(2) Transfer case

NOTE:

- *The air locking hubs are activated by the vacuum of the engine and changed to shift the front wheel drive. The air locking hubs are not shifted when the engine is stopping. Several seconds are required from the operation of the transfer lever to the activation of air locking hubs.*
- *When the front tyres receive a big shock during running in 2-wheel drive position on the road surface of the big irregularity, etc, some noise may occur inside the air locking hubs afterwards. In this situation, stop the vehicle and then shift the transfer lever into “4H” position. After that, shift the transfer lever into “2H” position again.*

Description of Transfer Lever Positions and Indicator Light

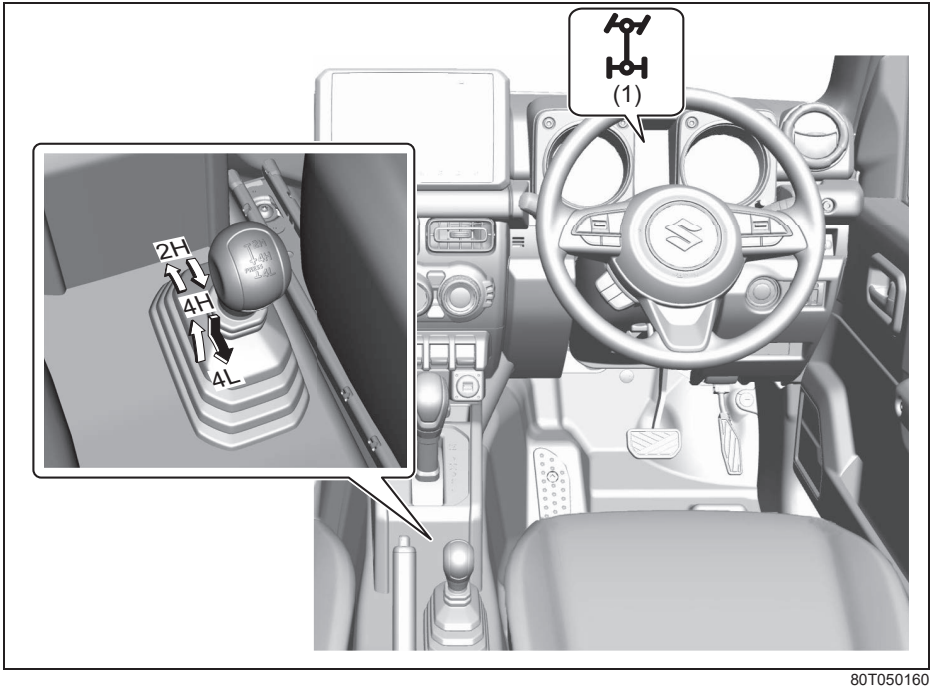

80T050160

(1) 4WD indicator light

⇧ ⇩	Shift the transfer lever without the lever pressed.
⬇	Shift the transfer lever with the lever pressed.

Transfer lever position	Wheel drive position	Indicator light 4WD indicator light	Description
2H	2-wheel drive position	–	In this position, engine power is supplied to the rear axle only. Use this position for normal driving.
4H	4-wheel drive high range position	 78RB03024	In this position, engine power is supplied to the front and rear axles at normal speed, providing greater traction than 2-wheel drive. Use this position for off-road driving, or for driving on slippery roads (icy, snow-covered, muddy, etc.).
4L	4-wheel drive low range position	 78RB03024	In this position, engine power is supplied to the front and rear axles at reduced speed. Use this position for off-road driving on soft or slippery surfaces, or for climbing or descending steep, slippery hills.

NOTICE

- **Never operate your vehicle in “4H” or “4L” on dry pavement and, as much as possible, avoid using “4H” or “4L” on wet pavement, as this may seriously damage the drive train.**
- **If the transfer lever is returned to the original position while shifting the transfer lever, the drive train may be damaged.**
- **When you turn suddenly on a sharp curve, a side road, or a parking space in “4H” or “4L” position, the turning strength of the steering wheel will be growing big and tight corner braking phenomenon* may occur and result in accidents. 4-wheel drive system damage could also result.**

* Tight corner braking phenomenon is the similar situation to depress the brake when the drive train is in 4-wheel drive position (“4H” or “4L”) and the steering wheel is turned suddenly and then the revolution difference between the front wheels and the rear wheels could not absorb.

Transfer Lever Operation

NOTICE

- **Unevenly worn tyres can cause problems in the operation of the transfer lever. Be sure to rotate the tyres according to the maintenance schedule. Refer to "Tyres" and "Maintenance Schedule" in the "INSPECTION AND MAINTENANCE" section for proper tyre rotation procedures.**
- **If a problem exists during the shifting function, all lights of the 4WD indicator will blink continuously and the transfer lever operation will not work.**
  If the shift function does not work after trying the shifting operation several times, it may be the result of a system failure. Have your vehicle inspected by a Maruti Suzuki authorized workshop.

NOTE:
- *When the temperature of 4-wheel drive system or the transmission is not warm under the low temperature, you may feel it hard to shift the transfer lever or gear noise may occur.*
- *Unless you can shift the transfer lever, drive your vehicle for a while and then shift the transfer lever again.*

Operate the transfer lever according to the appropriate procedure described below:

From "2H" position to "4H" position
From "4H" position to "2H" position

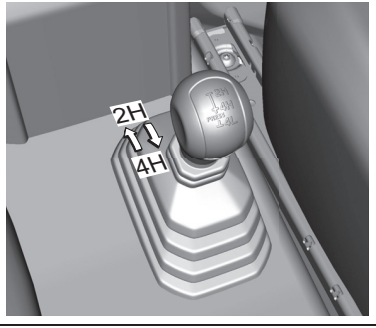

78RB03026

The transfer lever can be shifted when the vehicle is either stopped or moving.
Position the front wheels straight ahead and shift the transfer lever from "2H" to "4H" or "4H" to "2H". If the vehicle is moving, the speed must be less than 100 km/h during this operation.

⚠ WARNING

Do not shift the transfer lever while the rear tyre is spinning. Your vehicle may move to the unexpected direction. 4-wheel drive system may be also damaged.

NOTICE

Pay attention to shifting the transfer lever safely when driving your vehicle.

NOTE:
- *After shifting the transfer lever from "2H" to "4H", check that the 4WD indicator light comes on.*
- *After shifting the transfer lever from "4H" to "2H", check that the 4WD indicator goes off.*
- *When 4WD indicator light is blinking after shifting the transfer lever to "4H" position, accelerate, slow down your vehicle or stop and reverse your vehicle a little to shift the transfer lever. Pay attention to the vehicles and the circumference toward or backward your vehicle when shifting the transfer lever.*
- *When you shift the transfer lever while turning the steering wheel or depressing the accelerator pedal, shifting the transfer lever may be difficult.*
- *Operate the transfer lever while driving at low speed if it may be difficult to shift the transfer lever from "2H" position to "4H" position when the vehicle is stopped.*

- *Shift the transfer lever again after decelerating or stopping the vehicle if it may be difficult to shift the transfer lever from "2H" position to "4H" position while driving or when the gear noise occurs.*
- *There may be a case to operate the transfer lever heavily when shifting the transfer lever from "4H" position to "2H" position while driving. In this case, position the front wheels straight ahead and drive for a while and then operate shifting the transfer lever again.*
- *When the transfer lever is shifted from 2H" position to "4H" position or from "4H" position to 2H" position and the air locking hubs are activated, the air conditioning system may not be operated for several seconds. This is not a malfunction.*
- *When the ignition switch is turned "ON" after the transfer lever is shifted from 2H" position to "4H" position or from "4H" position to 2H" position while stopping the engine, 4WD indicator light may blink. This is not a malfunction.*

From "4H" position to "4L" position

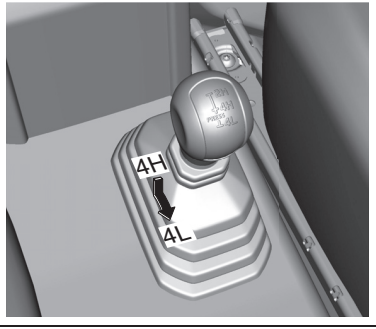

78RB03027

Stop the vehicle completely, place the transmission in "N" (Neutral) or depress the clutch pedal fully (if equipped), then shift the transfer lever from "4H" position to "4L" position by pressing the transfer lever.

⚠ WARNING

When you turn off the engine while the transfer is not finished to shift into "4L" position, follow instructions below.

1) Depress the brake pedal* fully.
2) Turn the ignition switch to "OFF" position or press the engine switch to change the ignition mode to OFF.

*** Depress the brake pedal until the engine is started again.**

- **Even though the gearshift lever is shifted into 1st gear or "R" (Reverse) gear for manual transmission vehicles or shifted into "P" (Park) position for automatic transmission vehicles, there may be a case that the wheels of the vehicle is not stationary.**

When you turn off the engine in this situation, start the engine again and move the vehicle forward or backward slowly.

⚠ CAUTION

- **Do not operate the transfer lever while driving.**
- **Do not operate the transfer lever while making a left or right turn or while holding rear wheels slipped on icy, snow-covered, or muddy roads. Your vehicle may move to the unexpected direction. 4-wheel drive system may be also damaged.**

NOTE:

- *There may be a case that you will feel the difficulty to operate the transfer lever when shifting the transfer lever from "4H" position to "4L" position. Operate the transfer lever into "4L" position surely.*
- *When shifting the transfer lever from "4H" position to "4L" position, the buzzer will sound and the function of the ESP® system and the vehicle stability control system will be deactivated.*
- *There may be a case that shifting into "4L" position is not completed when the transfer system or the transmission is not warm in the cold weather. There may be a possibility of difficulty to shift especially for automatic transmission vehicles in the cold weather. Follow instructions below in this case and operate the transfer lever again.*
  - *Stop the vehicle completely.*
  - *Place the transmission in "N" (Neutral).*
  - *Depress the brake pedal* fully.*
  - *Release the parking brake.*
  - *Turn the ignition switch to "OFF" position or press the engine switch to change the ignition mode to OFF.*
  - *Shift the transfer lever from "4H" position to "4L" position by pressing the transfer lever.*
  - *Check whether the vehicle can be moved by moving the vehicle forward or backward slowly.*

  ** Depress the brake pedal until the engine is started again.*
- *There may be a case that it is difficult to operate the transfer lever or the gear noise occurs after driving the vehicle for a while in the cold weather. There may be a possibility of difficulty to shift the transfer lever from "4H" position to "4L" position. In this case, shift the transfer lever into "4H" position or "2H" position and then operate the transfer lever again after driving for a while.*

From "4L" position to "4H" position

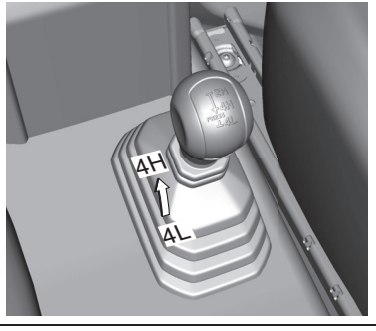

78RB03028

Stop the vehicle completely, place the transmission in "N" (Neutral) or depress the clutch pedal fully (manual transmission model), then shift the transfer lever from "4L" position to "4H" position.

Cruise Control (if equipped)

The cruise control system allows you to maintain a steady speed without keeping your foot on the accelerator pedal. The controls for operating the cruise control system are on the steering wheel.

You can use the cruise control system under the following conditions:

- For manual transmission vehicle, the gear position is in 3rd, 4th or 5th
- For automatic transmission vehicle, the gearshift lever is in “D” position
- When the transfer lever is in “2H” or “4H” position
- When 4WD indicator light does not blink
- The vehicle speed is about 40 km/h or higher

⚠ WARNING

To help avoid loss of vehicle control, do not use the cruise control system when driving in heavy traffic, on slippery or winding roads, or on steep downhills.

Setting Cruising Speed

Cruise control switch

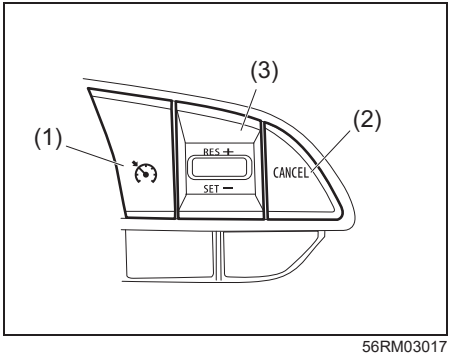

56RM03017

(1) Cruise switch
(2) “CANCEL” switch
(3) “RES +/SET –” switch

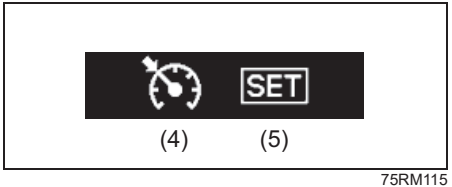

75RM115

(4) Cruise indicator
(5) “SET” indicator

1) Turn on the cruise control system by pushing cruise switch (1). When the cruise indicator (4) comes on, you can set cruising speed.
2) Accelerate or decelerate to the desired speed.
3) Push down the “RES +/SET –” switch (3), “SET” indicator (5) comes on. Take your foot off the accelerator pedal and the set speed will be maintained.

⚠ WARNING

If the cruising speed is set by accident, you cannot decelerate or could loose control of the vehicle. This could lead to an accident, resulting in severe injury or death.
Turn off the cruise control system and check that cruise indicator (4), “SET” indicator (5) is off when the system is not in use.

NOTE:
Established cruising speed may differ a little from the speed meter indication depending on the road conditions.

Changing Speed Temporarily

When the cruising speed is maintained, you can temporarily accelerate or decelerate.

To accelerate, depress the accelerator pedal. When you take your foot off the pedal, your vehicle will return to the set speed.

To decelerate, depress the brake pedal. The set speed will be canceled and “SET” indicator (5) will go off.
To resume the previously set speed, push up the “RES +/SET –” switch (3) and turn on “SET” indicator (5) again when vehicle speed is above 40 km/h. The vehicle will accelerate to the previously set speed and maintain its speed.

Changing Cruising Speed

Using the accelerator pedal
To reset at a faster cruising speed, accelerate to the desired speed using the accelerator pedal and push down the “RES +/SET –” switch (3). The new speed will be maintained.

Using the brake pedal
To reset at a slower cruising speed, decelerate to the desired speed using the brake pedal and push down the “RES +/SET –” switch (3). The new speed will be maintained.

NOTE:
When the brake pedal is depressed, “SET” indicator (5) will go off until you reset the cruising speed.

Using “RES +/SET –” switch
To reset at a faster cruising speed, press repeatedly or hold push up the “RES +/SET –” switch (3). Vehicle speed will steadily increase. When you release the switch, the new speed will be maintained.

To reset at a slower cruising speed, press repeatedly or hold push down the “RES +/SET –” switch (3) until the vehicle has slowed to the desired speed, and then release the switch. The new speed will be maintained.

NOTE:
- *You can adjust the set speed by approximately 1 km/h by pushing “RES +/SET –” switch quickly.*
- *When the current vehicle speed is about 10 km/h or more faster than the previously set speed, the cruising speed cannot be decreased even if the “RES +/SET –” switch (3) is pushed down.*
- *When the current vehicle speed is about 10 km/h or more slower than the previously set speed, the cruising speed cannot be increased even if the “RES +/SET –” switch (3) is pushed up.*

Canceling Cruise Control

“SET” indicator (5) will go off and the cruise control will be canceled temporarily with the following conditions:

- Push “CANCEL” switch (2)
- Depress the brake pedal
- For manual transmission, depress the clutch pedal
- For automatic transmission vehicle, the gear position is changed to “L”
- The vehicle speed falls more than about 20 percent from the set speed
- Any time the vehicle speed falls below 40 km/h
- When the vehicle skids and ESP® is activated
- If the automatic brake system is working
- When the transfer lever is operated

To resume the previously set speed, push up the “RES +/SET –” switch (3) and turn on “SET” indicator (5). The vehicle speed must be above 40 km/h when the vehicle is not under the above conditions.

To turn off the cruise control system, push cruise switch (1) and check that the cruise indicator (4) is off.

Also, if the malfunction indicator light in the instrument cluster comes on or blinks, the cruise control system will be turned off.

NOTE:
If you turn off the cruise control system, the previously set speed in the memory is cleared. Reset your cruising speed again.

Parking Sensors

- The parking sensor system uses ultrasonic sensors to detect obstacles near the rear bumper. If obstacles are sensed while you are parking or moving the vehicle slowly, the system warns you by sounding a buzzer.
- The system emits an ultrasonic wave and the relevant sensor detects the return of the wave reflected by an obstacle. The system measures the time taken by the ultrasonic wave to reach the obstacle and return from it, from which it determines the obstacle’s position.
- The parking sensor function can be used when you turn the ignition switch to “ON” position or the engine switch is pressed to change the ignition mode to “ON”, the gearshift lever is in the reverse position (manual transmission models) or “R” position (automatic transmission models). This function is helpful in the following cases: pulling over to the curb; parallel-parking the vehicle; steering the vehicle into a garage; driving along an alley; and moving slowly in a place with obstacles.

⚠ WARNING

- **The parking sensor warns you of obstacles with buzzers. However, you must still pay full attention yourself while driving.**
- **The sensors can detect obstacles only within a limited area and only when the vehicle is moving within a limited speed range. So, in tricky areas, you must move the vehicle slowly while checking around it using your direct vision or rearview mirrors. There is increased risk of an accident if you control the vehicle relying only on the parking sensor.**

NOTICE

Parking sensors are only for driver’s assistance.

NOTE:
When the gearshift lever is shifted to the reverse position (manual transmission models) or “R” position (automatic transmission models), a buzzer will sound once.

Sensor Locations

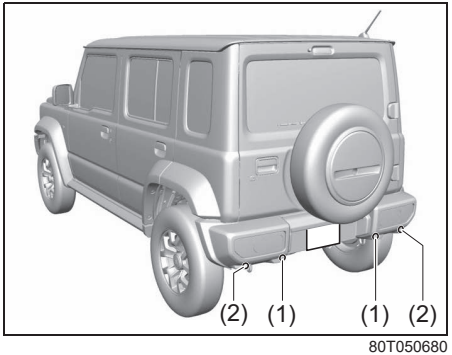

80T050680

(1) Rear center sensors (2 places)
(2) Rear corner sensors (2 places)

NOTICE

- **Avoid hitting the sensor areas or directing the nozzle of a high-pressure car washer onto the sensor areas. Otherwise, the sensors may be damaged.**
- **If the bumper hits a hard object, the sensors on it may not work properly. If this occurs, have the sensors inspected by a Maruti Suzuki authorized workshop.**

Working sensors

The sensors work depending on the gearshift lever position as follows:

Gearshift lever position		Manual transmission		Automatic transmission		Parking brake lever
		R	N, 1st – 5th	R	N, D or L	
Rear sensors	Center	On	Off	On	Off	No relation
	Corner	On	Off	On	Off	No relation

Upon detecting an obstacle, the parking sensor causes an interior buzzer to sound.

- A buzzer located behind the rear seat sounds when a sensor at the rear detects an obstacle.
- Warnings when obstacles are detected by rear sensors

Distance (approx.)		Buzzer
Center sensors	60–150 cm	Short beeps at long intervals
45–60 cm		Short beeps at short intervals
35–45 cm		Short beeps at very short intervals
Less than 35 cm		Continuous beep

NOTE:

- *Buzzer will sound with a short delay after the detection of obstacles.*
- *If the system detects multiple obstacles simultaneously, however, the buzzers will sound only for the nearest obstacles.*

Approximate areas where obstacles can be detected

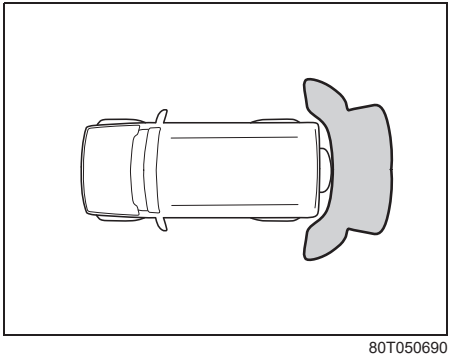

80T050690

- An obstacle within about 20 cm (8 in) from a sensor or just below a sensor is not detectable.
- The sensors can detect obstacles such as a wall up to about 1.5 m (5 ft) from the rear of vehicle.

⚠ WARNING

- **Under the following conditions, the parking sensor system may not work normally because the sensors cannot detect obstacles correctly.**
  - **Sensors are covered with mud, ice or other materials (Such materials must be removed for normal operation).**
  - **Sensors are wet from water splashes or heavy rain.**
  - **Sensors are covered by a hand, sticker, accessory, etc.**
  - **There is an accessory or other object attached within the sensor's sensing area.**
  - **Items such as tow hooks, commercially available corner poles, radio antenna, etc. are installed on the bumper.**
  - **The height of the bumper is changed due to alteration to the suspension or other causes.**
  - **The sensor areas are extremely hot from direct sunlight or cold due to freezing weather.**
  - **The vehicle is on a rough surface, slope, gravel road or grass field.**
  - **The vehicle is at a steep angle.**

(Continued)

⚠ WARNING

(Continued)

  - **Sensors have intercepted ultrasonic noise from another vehicle's horn, engine, air braking system (large vehicles), or parking sensor.**
  - **Obstacles are too close to the sensors.**
  - **Sensors are at an angle to a highly reflective object such as glass (Ultrasonic waves are not reflected back from the obstacle).**
- **Sensors may not be able to correctly detect the following types of obstacles:**
  - **Objects made of a thin material like wire netting and ropes.**
  - **Square-shaped curbstones or other objects with sharp edges.**
  - **Tall objects with a large upper part like a road sign.**
  - **Low-profile objects such as curbstones.**
  - **Sound-absorbing objects such as cotton and snow.**

NOTE:
- *Thin poles or obstacles lower than the sensors may become undetectable as the vehicle moves closer to them even if they have been detected from longer distances.*
- *The system may calculate the distance to a road sign or similar obstacle to be shorter than the actual distance.*

Parking Sensor System Malfunction

If there is a problem or warning regarding the parking sensor system, a buzzer inform it. Follow its instruction.
- The buzzer sounds intermittently. The indicated sensor is contaminated. Wipe it clean with a soft cloth. If the buzzer does not stop after wiping, there may be problem with the parking sensor system. Have your vehicle inspected by a Maruti Suzuki authorized workshop.

Rearview Camera

When the gearshift lever is shifted to “R” position while the ignition switch is in “ON” position or the ignition mode is “ON”, the rearview camera system automatically shows the view behind the vehicle on the display.

⚠ WARNING

The distance viewed in the rearview camera may differ from the actual distance according to the condition of road or the load the vehicle is carrying. Since the camera display area is also limited, backing up by only looking at the display may cause an accident or a crash with an object.
The rearview camera cannot replace the driver’s attention. The driver alone is responsible for parking and similar driving maneuvers.
- **Use the rearview camera only to provide driving assistance.**
- **Always drive carefully confirming the safety of the rear and the surrounding conditions by looking directly with your eyes and using the rear view mirror.**
- **Check that the trunk lid is securely closed when backing up.**

NOTICE

If you use the rearview camera for a long time when the ignition switch is in “ON” position or the ignition mode is ON, but the engine is not running, the battery may discharge.
Do not leave the ignition switch in “ON” position or the ignition mode to ON for a long time when the engine is not running.

Rearview Camera Location

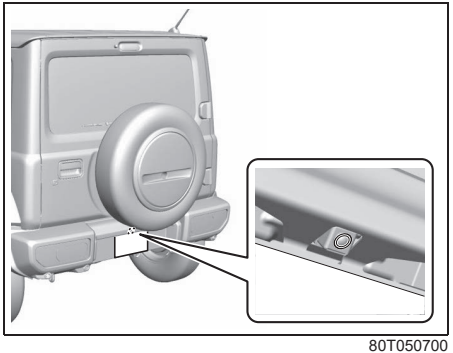

80T050700

(1) Rearview camera

The rearview camera is installed on the tailgate.

NOTICE

- **The rearview camera is a precision instrument. If you strike the camera, it may be broken and cause damage resulting in a catch fire or a malfunction.**
  - **Do not strike the camera.**
  - **Do not remove snow or mud on the camera lens with a stick.**
- **If water enters the rearview camera, it may cause a malfunction or catch fire.**
  Do not use high pressure water around the camera.
- **This lens is hard coated to prevent damage or discoloration. Damage or discoloration of lens may obscure the image.**
  - **Do not use a brush to clean lens.**
  - **Do not use alcohol, benzene or thinner to clean the lens.**
  - **Do not use wax on the camera lens.**

NOTE:
If body wax gets on the camera lens, wipe off the wax with a clean cloth dampened with mild detergent diluted with water, and then wipe the lens with a dry cloth.

How to use Rearview Camera

1) Turn the ignition switch to “ON” position or press the engine switch to change the ignition mode to “ON”.
2) Shift the gearshift lever in “R” position.
   - The display automatically shows the view behind the vehicle.
   - When the gearshift lever is shifted from “R” to another gearshift lever position, the display returns to the previous display.

NOTE:
The rearview camera display has first priority in any display mode. However, the rearview camera display does not show the rear view while the system is initializing.

Display Range of Rearview Camera

The rearview camera display shows the area behind the rear end of the bumper. The display cannot show objects which are close to the bumper or under the bumper.
The rearview camera display cannot show obstacles which are higher than the camera. Upper parts of tall objects such as road signs cannot be viewed on the display.

Display range of rearview camera

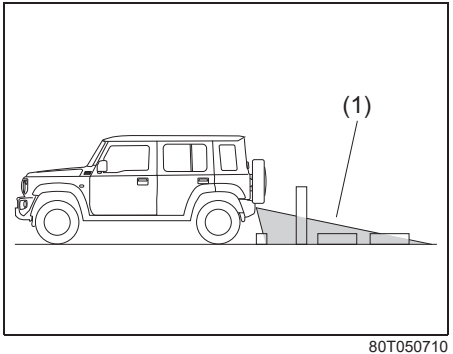

80T050710

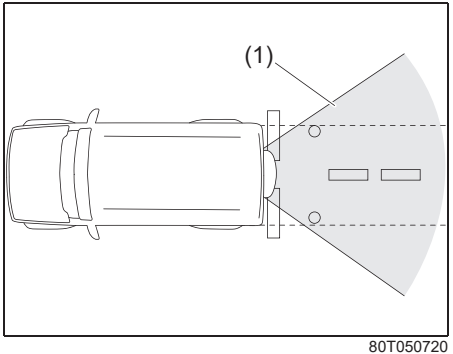

80T050720

(1) Display range

NOTE:

- *Images shown on the display from the rearview camera are reversed images (mirror images).*
- *The colors of objects on the rearview camera may differ from the actual object colors.*
- *The rearview camera display may be difficult to see under the following conditions, but this is not a system malfunction.*
  - *In dark areas, on a rainy day or at night.*
  - *When the temperature around the lens is too high/low, or the camera is wet such as on a rainy day or during periods of high humidity (dew condensation may occur on the camera lens).*
  - *When a foreign object such as mud or a drop of water is stuck around the camera lens.*
  - *When strong light directly enters the camera (vertical lines may be seen on the display).*
  - *Under fluorescent light (The display may flicker).*
  - *When the outside temperature is low (the image on the display may be darkened).*

How to Understand the Displayed Items on the Screen

The rearview camera display and following guide lines will be displayed on the screen.

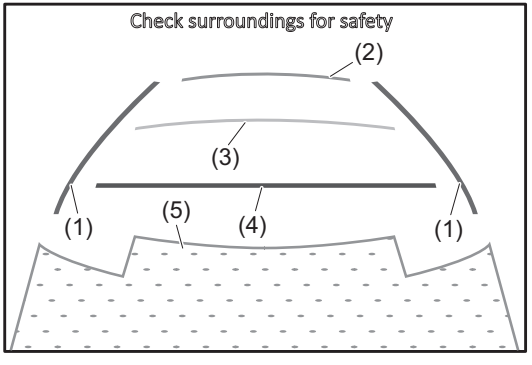

80T051090

- As each guide line is displayed towards road surface, the distance from your vehicle to an obstacle such as the parked vehicle near your vehicle is not accurately displayed.
- Trapezoidal guide lines for the distance and the vehicle width which are displayed on the screen are rough indications and they depend on the actual distance and vehicle width.
- If you modify suspensions or replace a tyre by undesignated tyre, the guide lines will not be accurately displayed.

No.	Item name	Displayed color	Contents
(1)	Guide line for the vehicle width (vertical line)	Purple	This shows the guide line of the position which is slightly outside of the vehicle width (including the width of outside rearview mirrors).

No.	Item name	Displayed color	Contents
(2)	Guide line for the distance	Light blue	This shows the guide line of the position which is about 2 m (6.6 ft) backward from the center of bumper back-end.
(3)		Yellow	This shows the guide line of the position which is about 1 m (3.3 ft) backward from the center of bumper back-end.
(4)		Red	This shows the guide line of the position which is about 0.5 m (1.6 ft) backward from the center of bumper back-end
(5)	Guide line for the vehicle body	Orange	This shows the guide line of the position of the vehicle body shape (including the spare wheel).

Rearview Camera Screen Indication

The distance viewed in the rearview camera may differ from the actual distance according to the condition of the road or the load the vehicle is carrying.

Uphill incline behind the vehicle

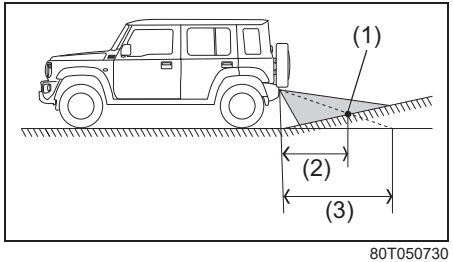

80T050730

(1) Object
(2) Actual distance
(3) Distance on the display

When there is an uphill incline behind the vehicle, the object shown on the display appears farther away than the actual distance.

Downhill incline behind the vehicle

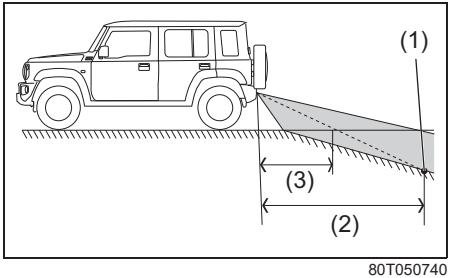

80T050740

(1) Object
(2) Actual distance
(3) Distance on the display

When there is a downhill incline behind the vehicle, the object shown on the display appears closer than the actual distance.

If the rear view from the rearview camera is not shown or there is a poor image

- If the rear view from the rearview camera is not shown.
  – Check that the ignition switch is in “ON” position or the ignition mode is “ON”.
  – Check that the gearshift lever is shifted to “R” position.
- If the image from the rearview camera is poor.
  – Check that the camera lens is not dirty.
  – Check that light from the sun or the beam of the headlights from the vehicle behind is not shining directly into the lens.

If the rearview camera system is still not working properly after checking the above, have the system inspected by a Maruti Suzuki authorized workshop as soon as possible.

Electronic Stability Program (ESP®)

ESP® is a registered trademark of Mercedes-Benz Group AG.

The Electronic Stability Program (ESP®) helps to control the vehicle during cornering if front wheels or rear wheels skid. It also assists you in maintaining traction while accelerating on loose or slippery road surfaces. It does this by regulating the engine's output, and by selectively applying the brakes. In addition, ESP® helps to avoid skidding by controlling braking pressure.

⚠ WARNING

The ESP® cannot enhance the vehicle's driving stability in all situations and does not control your vehicle's entire braking system. The ESP® cannot prevent accidents, including those resulting from excessive speed in turns, or hydroplaning. Only safe and attentive drive can prevent accidents.
The capabilities of an ESP®-equipped vehicle must never be used as a substitute for careful driving.

⚠ CAUTION

- **Observe the following points. Otherwise, ESP® may not operate properly or it may result in a malfunction.**
  - **Adjust the tyre pressure as specified.**
  - **When replacing tyres, use the same tyres with the size, type, and tread patterns.**
  - **Do not use the tyres which have excessively worn conditions.**
  - **Do not modify the suspension or the brake and do not change vehicle height or suspension hardness.**
  - **Do not drive the vehicle with suspension or brake excessively deteriorated.**
  - **Do not modify the engine or the muffler.**
  - **Do not install LSD (limited slip differential).**
- **When you install the snow chains, ESP® may not operate properly.**

The ESP® has the following systems:

Anti-lock Brake System (ABS)

Refer to "Anti-lock Brake System (ABS)" in this section.

Brake Assist System

Refer to "Brake Assist System" in this section.

Traction Control System

The traction control system automatically helps prevent the spinning of wheels when the vehicle is started or accelerated on slippery road surfaces. The system operates only if it senses that some of the wheels are spinning or beginning to lose traction. When this happens, the system operates the front or rear brakes and reduces engine power to limit wheel spin.

NOTE:
You may hear an operation sound when you start the engine or after the vehicle begins to move. This means that the above systems are in the self-check mode. This sound does not indicate a malfunction.

Stability Control System

The vehicle stability control system helps provide integrated control of systems such as anti-lock brakes, traction control, engine control, etc. This system automatically controls the brakes and engine to help prevent the vehicle from skidding when cornering on a slippery road surface or when turning the steering wheel abruptly.

NOTE:

- *If you perform the following operations, you may hear an operation sound or a clicking sound. This means that the ESP® system is in the self-check mode and this does not indicate a malfunction.*
  - *When ignition switch is turned to the "ON" position or pressing the engine switch to change the ignition mode to "ON"*
  - *When releasing your foot from the brake pedal, after the ignition switch is in "ON" position or the ignition mode is "ON" with the brake pedal depressed*
  - *When starting the engine*
  - *When starting the vehicle after starting the engine*
- When engine revolutions is high and ESP® operates, you may feel the change of engine revolutions or vibration of vehicle body. However, this is normal.

ESP® Warning Light

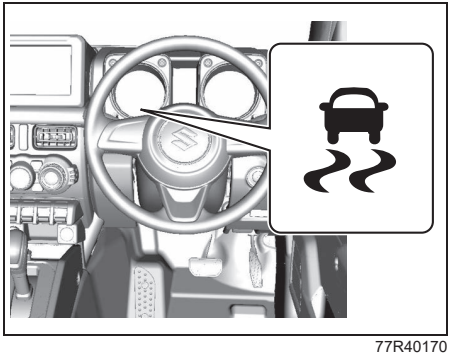

77R40170

- If there is a problem in the ESP® system with the ignition switch in "ON" position or the engine switch in ON mode, this light will come on. While this light comes on, the following situations will occur. In this case, ask your Maruti Suzuki authorized workshop for inspection.
  - The following functions will not work:
    - Traction control system
    - Stability control system
    - Hill descent control system
    - SUZUKI SAFTY SUPPORT
    - ENG A-STOP system
  - Hill hold control system may not work.
  - ABS will work.
  - Depending on the malfunction condition, brake assist system may not work.
  - If any of the following situations occurs, this light will blink at very short intervals of 0.2 seconds.
    - Traction control system is activated when starting or accelerating the vehicle
    - Stability control system is activated when making a sharp turn or whirling round
    - Hill descent control system is activated when going down steep hills
- If the system is in normal condition, when you turn the ignition switch to "ON" position or press the engine switch to change the ignition mode to ON, this light will come on for about 2 seconds and then come off.

⚠ CAUTION

If this light blinks at very short intervals, there is high possibility that the vehicle will be stuck or skid on a slippery road surface. In this case, drive the vehicle very carefully.

NOTE:
While this light comes on, traction control system and stability control system will not be activated. However, you can use ABS.

ESP® OFF Switch

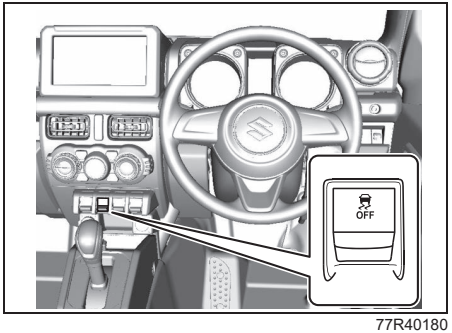

77R40180

(1) ESP® OFF switch

When the ESP® OFF switch located at the instrument panel is pushed and held to turn off the ESP® systems (other than ABS), the ESP® OFF indicator light in the instrument cluster comes on.
When you have turned the ESP® systems (other than ABS) off, turn them back on before resuming ordinary driving.
When you push the ESP® OFF switch again, the ESP® OFF indicator light will go out and all of the ESP® systems will be activated.

NOTE:
When you push and hold the ESP® OFF switch for a while with the transfer lever in "4L" position, the hill hold control system can be deactivate.

75RM223

If the message shown in the above illustration appears on the information display, master warning indicator light blinks and the interior buzzer beeps, there may be a problem with the ESP® system. Have your vehicle inspected by a Maruti Suzuki authorized workshop.

NOTE:
- *The ESP® system will not activate while this message is displayed.*

ESP® OFF Indicator Light

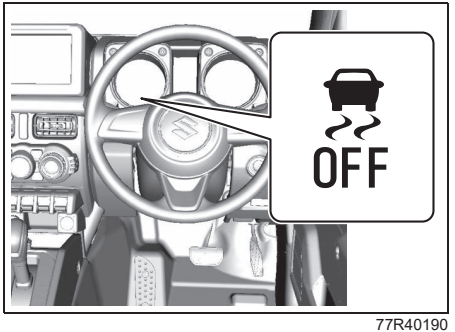

77R40190

You should turn the ESP® on during your ordinary driving, so that you have the benefits of all of the ESP® systems.

It may be required to turn the ESP® systems (other than ABS) off if your vehicle is stuck in sand, mud, or snow, where wheel spin is necessary.

- If you press and hold the ESP® OFF switch with the ignition switch is in "ON" position or the ignition mode is "ON", this light will come on.
  – While this light comes on, traction control system and stability control system will not work.
- If the system is in normal condition, when you turn the ignition switch to "ON" position or press the engine switch to

change the ignition mode to ON, this light will come on for about 2 seconds and then come off.

NOTE:
- *When the vehicle speed is greater than approximately 30 km/h, the ESP® systems (other than ABS) will turn on automatically and the ESP® OFF indicator light will go out.*
- *When the transfer gear is in "4L" (4-wheel drive low range) position, the ESP® systems (other than ABS) will be canceled to provide improved vehicle traction, and the ESP® OFF indicator light will come on.*
  When the transfer gear is in "4L" (4-wheel drive low range) position, brake traction control can be activated. Brake traction control brakes the spinning wheel to distribute drive power to the other wheels for increased climbing ability or for better performance on a rolling hill or a slippery surface.

Hill Descent Control System

The hill descent control system is designed to reduce the driver's workload when going down steep, rough and/or slippery hills where the vehicle cannot decelerate enough by engine braking alone. The hill descent control system helps to control vehicle speed by automatically engaging the vehicle's brakes, as needed, so you can concentrate on steering the vehicle.

⚠ WARNING

Do not rely excessively on the hill descent control system. The hill descent control system may not control the vehicle speed on a hill under all load or road conditions. Always be prepared to control vehicle speed by applying the brakes. Failure to pay attention and control vehicle speed using the brakes when necessary may result in loss of control or an accident.

Hill descent control switch

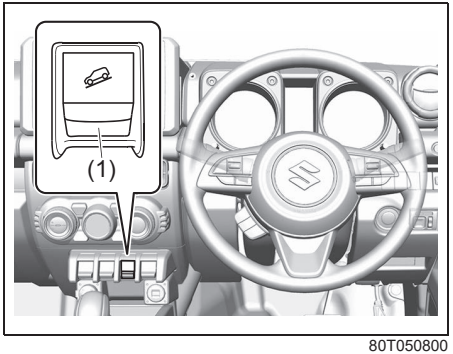

80T050800

(1) Hill descent control switch

To activate the hill descent control system:
1) Shift the transfer lever into 4-wheel drive high range position ("4H") or 4-wheel drive low range position ("4L").
2) Shift the gearshift lever into a forward gear or reverse gear.
3) Push the hill descent control switch (1) when the vehicle speed is under 25 km/h. The hill descent control indicator on the instrument cluster will come on and the hill descent control system will be activated.

4-wheel drive high range position
When the vehicle speed exceeds about 10 km/h without depressing the accelerator pedal, the hill descent control system applies the brakes automatically to maintain the vehicle speed at about 10 km/h.

4-wheel drive low range position
When the vehicle speed exceeds about 5 km/h without depressing the accelerator pedal, the hill descent control system applies the brakes automatically to maintain the vehicle speed at about 5 km/h.

- When braking, the brake/tail lights come on and the ESP® warning light blinks.
- When the vehicle speed exceeds about 35 km/h, the hill descent control system stops functioning and the hill descent control indicator goes blink. When the vehicle slows down below about 25 km/h, the hill descent control system will be activated again and the hill descent control indicator will come on.

⚠ WARNING

- **When the hill descent control system is used continuously for a long time, the temperature of the brake system may increase and the hill descent control system may be deactivated temporarily to protect the device of the brake system. The hill descent control indicator blinks to let you know the system is deactivated. Depress the brake pedal and stop the vehicle in a safe place. When the temperature of the brake system goes down, the hill descent control indicator will come on and the system is activated again.**
- **The hill descent control system may be activated when the gearshift lever is in “N” (Neutral) position, but engine braking will not work. Always use the hill descent control system with the gearshift lever in a forward gear or reverse gear.**
- **When using the hill descent control system, push the hill descent control switch and make sure that the hill descent control indicator light comes on and no warning message are indicated on the information display.**

NOTE:
You may hear a sound coming from the engine when the hill descent control system is activated. This sound is normal and does not indicate a malfunction.

To turn off the hill descent control system, push the hill descent control switch and turn off the hill descent control indicator light.

Hill descent control indicator light

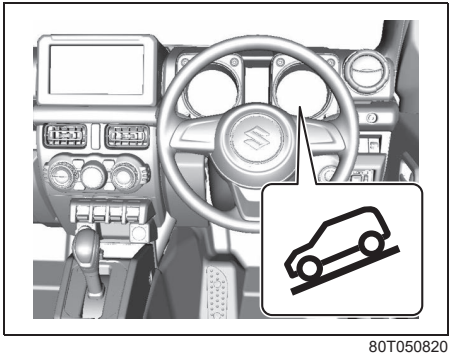

80T050820

When the ignition switch is in “ON” position or the ignition mode is ON, this light comes on briefly so you can check that the light is working.

When you push the hill descent control switch and the hill descent control operating conditions are fulfilled, the hill descent control indicator comes on. If the hill descent control indicator blinks, the hill descent control will not be activated.

If hill descent control indicator light comes on while not operating the hill descent control switch, or the indicator light does not come on after the switch is pushed, there is a problem in this system. Have your vehicle inspected by a Maruti Suzuki authorized workshop.

NOTE:
If the hill descent control indicator blinks when you push the hill descent control switch, check the following conditions.
- *The transfer lever is in 4-wheel drive high range position ("4H") or 4-wheel drive low range position("4L")*
- *The gearshift lever is in a forward gear or reverse gear*
- *The vehicle speed is under 25 km/h*
- *The brake system is under normal operating temperature*

NOTE:
If any of the following conditions occur, there may be a problem with the hill descent control system or the ESP® system. Have your vehicle inspected by a Maruti Suzuki authorized workshop.
- *The hill descent control indicator does not come on or blink when you push the hill descent control switch.*
- *The hill descent control indicator stays on when driving without pushing the hill descent control switch.*

75RM224

If the message shown in the above illustration appears on the information display, master warning indicator light blinks and the interior buzzer beeps, there may be a problem with the hill descent control system and the hill hold control system. Have your vehicle inspected by a Maruti Suzuki authorized workshop.

NOTE:
You cannot activate the hill descent control system while this message is displayed.

Hill Hold Control System

The hill hold control system is designed to assist you in starting to move up hills. When you start to move up a hill, the system helps prevent the vehicle from rolling downward (for approximately 2 seconds) while you move your foot from the brake pedal to the accelerator pedal.

⚠ WARNING

- **Do not rely excessively on the hill hold control system. The hill hold control system may not prevent the vehicle from rolling downward on a hill under all load or road conditions. Always be prepared to depress the brake pedal to prevent the vehicle from rolling downward. Failure to pay attention and depress the brake pedal to hold the vehicle on a hill when necessary, may result in loss of control or an accident.**
- **The hill hold control system is not designed to stop the vehicle on a hill.**

(Continued)

⚠ WARNING

(Continued)

- **After you release your foot from the brake pedal, accelerate the vehicle to move up immediately. If you release your foot from the brake pedal over 2 seconds, the hill hold control system will be canceled. If so, the vehicle may roll downward, which can result in an accident depending on the degree of slope. And, the engine may stall and the power assist for the steering and brakes will not work so steering and braking will be much harder than usual which can result in an accident or vehicle damage.**
- **If you drive on the steep slope, the gravel, the snow-covered road, or the muddy road and the hill hold control system is activated, there may be a possibility that the wheels will be locked and then the vehicle may lose the control.**

The hill hold control system activates for a maximum of about 2 seconds if your foot is moved from the brake pedal when the following conditions are all met.

1) The gearshift lever is in a forward gear or reverse gear.
2) The parking brake is released.
3) The vehicle is on an upward incline.

NOTE:
When the hill hold control system is activated, the following conditions may be found, but this is not a malfunction.

- You may hear a sound from the engine room.
- As brake pedal becomes heavy, it may be difficult for you to depress it.

75RM224

If the message shown in the above illustration appears on the information display, master warning indicator light blinks and the interior buzzer beeps, there may be a problem with the hill descent control system and the hill hold control system. Have your vehicle inspected by a Maruti Suzuki authorized workshop.

NOTE:
The hill hold control system will not activate while this message is displayed.

How to turn off Hill hold control system

When driving on a steep slope, or a slippery road (icy, snow-covered, muddy, etc), it is possible to deactivate the hill hold control system.

To deactivate the hill hold control system:

1) Make sure that the gear shift lever is in “N” (Neutral) position for manual transmission vehicles and automatic transmission vehicles.

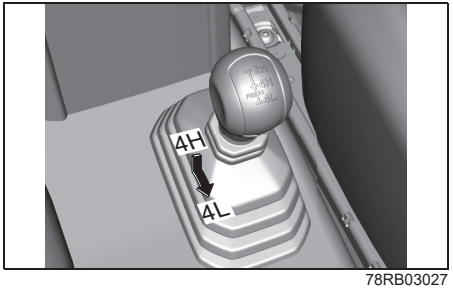

78RB03027

2) Shift the transfer lever from 4-wheel high range position (“4H”) to 4-wheel low range position (“4L”).

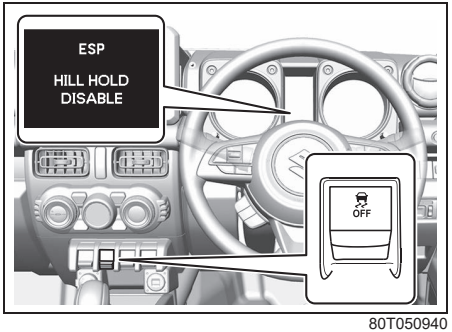

80T050940

3) When the ESP® OFF switch is pushed and held to turn off the ESP® system (other than ABS), the message is shown on the display for the vehicles with instrument cluster and the hill hold control system is deactivated.

NOTE:
- *When the ESP® OFF switch is pushed again, the hill hold control system is activated again.*
- *When the hill hold control system is deactivated and the transfer lever is shifted from "4L" position to "4H" position, the hill hold control system is activated again.*
- *When the hill hold control system is deactivated, hill descent control system is also deactivated.*

Braking

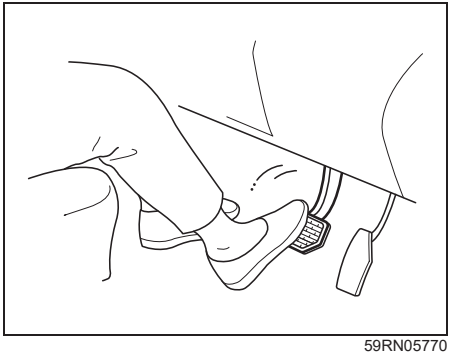

59RN05770

The distance needed to bring any vehicle to a halt increases with the speed of the vehicle. The braking distance needed, for example, at 60 km/h will be approximately 4 times greater than the braking distance needed at 30 km/h. Start to depress the brake pedal when there is plenty of distance between your vehicle and the stopping point, and slow down gradually.

⚠ WARNING

If water gets into the brake devices, brake performance may become poor and unpredictable. After driving through water or washing the underside of the vehicle, test the brakes while driving at a slow speed to see if they have maintained their normal effectiveness. If the brakes are less effective than normal, dry them by repeatedly applying the brakes while driving slowly until the brakes have regained their normal effectiveness.

Power-assisted Brakes

Your vehicle has power-assisted brakes. If power assistance is lost due to a stalled engine or other failures, the system is still fully operational on reserve power and you can bring the vehicle to a complete stop by pressing the brake pedal once and holding it down. The reserve power is partly used up when you depress the brake pedal and reduces each time the pedal is pressed. Apply smooth and even pressure to the pedal. Do not pump the pedal.

⚠ WARNING

Even without reserve power in the brake system, you can still stop the vehicle by pressing the brake pedal harder than normally required. However, the stopping distance may be longer.

Brake Assist System

When you slam the brakes on, the brake assist system determines it to be an emergency stop and provides more powerful braking for a driver who cannot hold down the brake pedal firmly.

NOTE:
If you quickly and forcefully depress the brakes, you may hear clicking sound by the brake assist system operation. This is normal and indicates that the brake assist system is activated properly.

Anti-lock Brake System (ABS)

ABS will help you avoid skidding by electronically controlling braking pressure. It will also help you maintain steering control when braking on slippery surfaces or when braking hard.
The ABS works automatically, so you do not need any special braking technique. Just push the brake pedal down without pumping. The ABS will operate whenever it senses that the wheels are locking up. You may feel the brake pedal move a little while the ABS is operating.

⚠ WARNING

- **Always check the surrounding conditions and drive the vehicle in a safe manner, as controlling the vehicle by ABS has limits and the system may not function properly depending on the surrounding conditions.**
- **If tyre grip performance is over the limit or hydroplaning occurs, ABS cannot work properly.**

NOTE:
- *If the ABS system is activated, you may hear a clunking noise and/or feel pulsating in the brake pedal. This is normal and indicates that the brake fluid pressure is being controlled properly.*
- *You may hear an operation sound when you start the engine or after the vehicle begins to move. This means that the above systems are in the self-check mode. This sound does not indicate a malfunction.*

Braking Distance

ABS is not designed to shorten the stopping distance.

⚠ WARNING

- **In the following situations, the braking distance required for a vehicle with ABS may be slightly greater than the one required for a vehicle without ABS, resulting in an accident. Drive the vehicle slowly and maintain ample distance between your vehicle and the vehicle in front of you.**
  - **When driving on rough roads such as unpaved or stone-paved roads**
  - **When driving on gravel roads or fresh snow roads**
  - **When driving over bumps on the roads such as joint seams**
  - **When passing over metal plates such as manholes**
  - **When snow chains are installed**

NOTE:
- *When applying sudden brake or applying brake on slippery roads, the braking distance required for a vehicle with ABS is almost the same as the one required for a vehicle without ABS.*
- *If you would like to suddenly apply brake, just push the brake pedal down firmly without pumping. Otherwise, the longer braking distance will be required.*
- *The ABS will not work if vehicle speed is under about 9 km/h. This depends on the road conditions.*

Vibration and Sound during ABS Operation

When strongly depressing the brake pedal, you might feel vibration of the brake pedal, the steering wheel, and the vehicle body. This is due to ABS operation, and does not indicate a malfunction; continue strongly depressing the brake pedal at this time.

NOTE:
Immediately after starting the engine and beginning to drive, you might temporarily hear a motor sound. This means that the systems are in self-check mode. This sound does not indicate a malfunction.

Tyres

⚠ WARNING

ABS detects each wheel rotation speed via a sensor. If tyres or wheels other than those specified in the owner's manual are used for size, type, tread pattern, or if worn conditions of tyres are different, the correct wheel rotation speed cannot be detected and ABS will not work properly. This may result in an accident.
When replacing tyres, use the tyres with the size, type, and tread patterns which are specified in this owner's manual.
Also, do not use the tyres which are excessively worn.

Situations where ABS may Activate by Chance when Applying Brake

- When driving on slippery roads

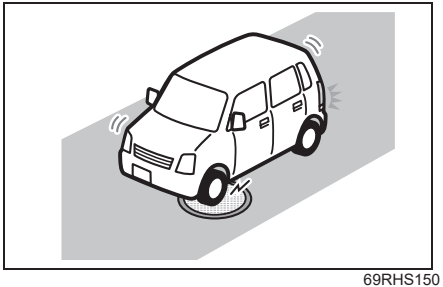

69RHS150

– Manholes

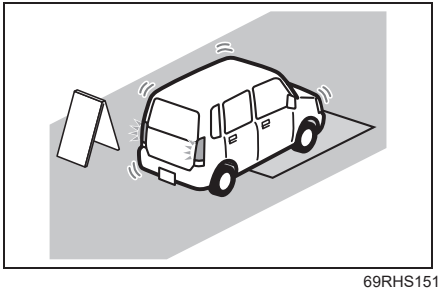

69RHS151

– Metal plates in construction zones

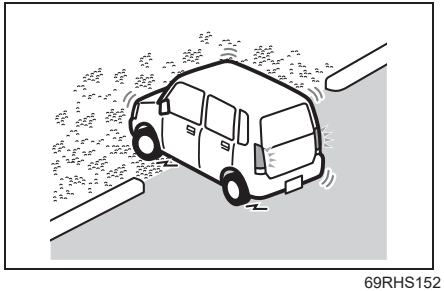

69RHS152

– Gravel roads

- When driving over joints in roads and other height differences

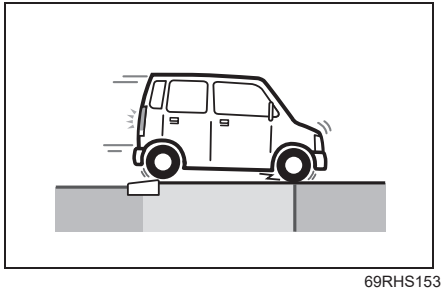

69RHS153

– Joints in roads

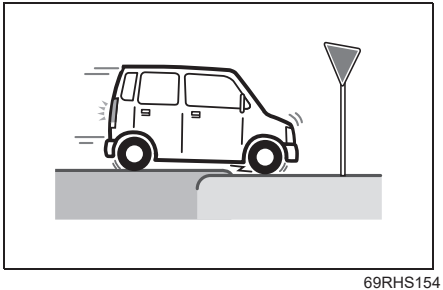

69RHS154

– Height differences in roads

- When driving on rough roads

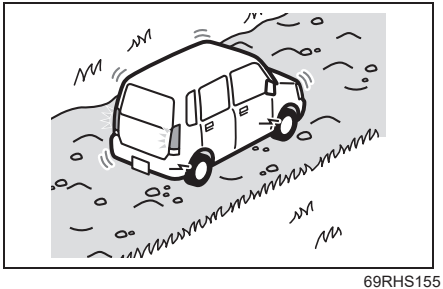

69RHS155

– Bumpy roads

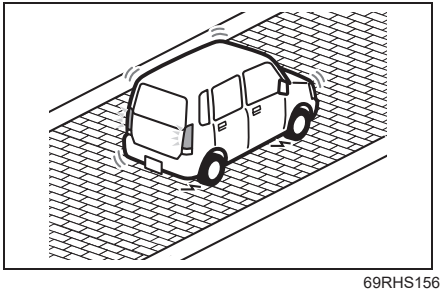

69RHS156

– Cobblestone

ABS Warning Light

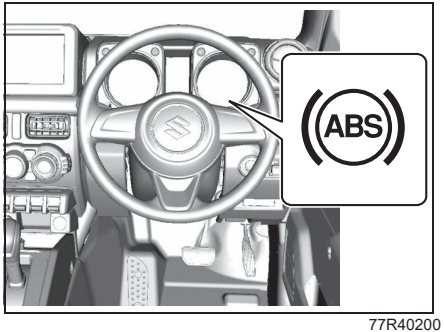

77R40200

If there is a problem in the ABS system with the ignition switch in “ON” position or the engine switch in ON mode, this light will come on.

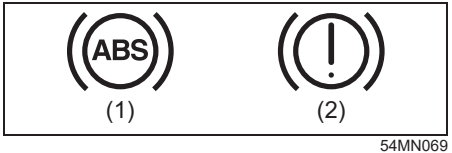

54MN069

(1) ABS warning light
(2) Brake system warning light

NOTE:

- *If the ABS warning light (1) on the instrument cluster comes on and stays on while driving, there may be a problem with the ABS system. Ask your Maruti Suzuki authorized workshop to inspect the ABS system immediately. If the ABS system becomes inoperative, the brake system will function as an ordinary brake system that has no ABS.*
- *If the ABS warning light (1) and the brake system warning light (2) on the instrument cluster simultaneously stay on or come on while driving, both anti-lock function and rear brake force control function (proportioning valve function) of the ABS system may have failed. If so, the rear wheels may easily skid or the vehicle can even spin in the worst case when braking on a slippery road or when hard braking even on a dry paved road. Ask your Maruti Suzuki authorized workshop to inspect the ABS system immediately. Drive carefully, avoiding hard braking as much as possible.*

Braking Assist

This function assists you in applying more force when operating the brake. When sudden braking is applied, the time until the ABS comes into full effect is shortened.

- If you do not depress the brake pedal firmly, braking assist will not operate.
- Brake assist is not a device that provides control beyond the original braking performance.

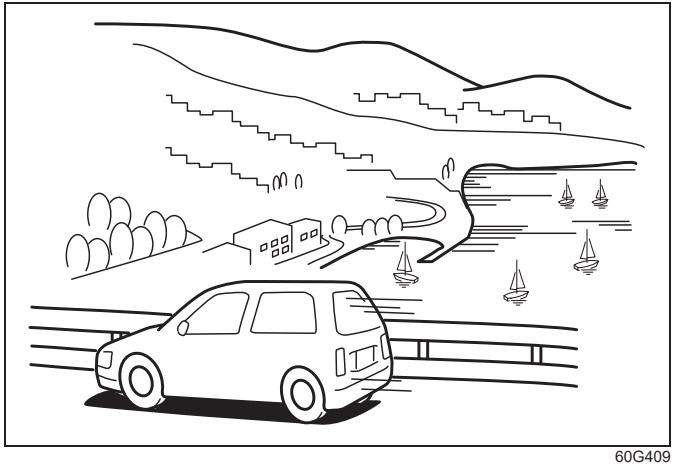

60G409

ADVICE FOR YOUR DRIVING

When Driving 6-1
Important Vehicle Design Features to Know 6-1
On-Paved Road Driving 6-2
Off-road Driving 6-10
Improving Fuel Economy 6-12
Precaution for Handling Vehicle 6-14
Running-in 6-17
Catalytic Converter 6-17

When Driving

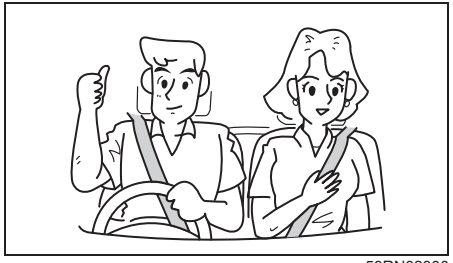

59RN02300

⚠ WARNING

- **Wear your seat belts at all times. Even though airbags are equipped at the front seating positions, the driver and all passengers should be properly restrained at all times, using the seat belts provided. Refer to "Seat belts and child restraint systems" in "FOR SAFE DRIVING" section for instructions on proper use of the seat belts.**
- **Never drive under the influence of alcohol or other drugs. Alcohol and drugs can seriously impair your ability to drive safely, greatly increasing the risk of injury to yourself and others. You should also avoid driving when you are tired, sick, irritated or under stress.**

Important Vehicle Design Features to Know

⚠ WARNING

Your multipurpose vehicle has handling characteristics that differ from those of a conventional passenger car. For the safety of you and your passengers, please read the following section very carefully.

Multipurpose vehicles such as your new Maruti Suzuki have higher ground clearance and a narrower track than conventional passenger cars, to make them capable of performing in a wide variety of off-road applications. Specific design characteristics give them a higher center of gravity than ordinary cars. An advantage of the higher ground clearance is a better view of the road allowing you to anticipate problems. They are not designed for cornering at the same speed as conventional passenger cars any more than low-slung sports cars are designed to perform satisfactorily under off-road conditions. If at all possible, avoid sharp turns or abrupt maneuvers. As with other vehicles of this type, failure to operate this vehicle correctly may result in loss of control or vehicle rollover. Multipurpose vehicles have a significantly higher rollover rate than other types of vehicles. In a rollover collision, an unbelted person is significantly more likely to die than a person wearing a seat belt.

Important Differences Between Your Multipurpose Vehicle and Ordinary Passenger Cars

Higher Ground Clearance

The higher ground clearance of your vehicle enables it to clear off-road obstacles, such as rocks and tree stumps, that ordinary passenger cars cannot drive over. An unavoidable result of this higher ground clearance is that the vehicle also has a higher center of gravity. Consequently, your vehicle will handle differently than a vehicle with a lower center of gravity.

Narrower Body Width and Track

Your vehicle is narrower than the average passenger car so that it can pass through tight spaces. Without the essential characteristics described above: higher ground clearance, and narrower body width and track -your vehicle could not provide you with excellent off-road driving performance. However, it is also true that on-road driving, handling, and steering will be different from what drivers experience with a conventional passenger car.

On-Paved Road Driving

The data of accidents show that most rollover accidents for multi-purpose vehicles are caused when a driver loses control of the vehicle and leaves the paved portion of the roadway striking a ditch, curb or other off-road object that causes the vehicle to overturn. The following driving practices may reduce the risk of rollover.

Vehicle Slides Off-Road

You can reduce the risk of this kind of rollover accident by always keeping the vehicle under control. Typically, drivers lose control of vehicles, often resulting in rollover accidents, when the driver is impaired because of alcohol or other drugs, falls asleep at the wheel or is otherwise inattentive, or is driving too fast for the road conditions.

Rollovers On the Roadway

If, for any reason, your vehicle slides sideways or spins out of control at highway speeds, while on the paved portion of the roadway, the risk of rollover is greatly increased. This condition can be created when two or more wheels drop off onto the shoulder and you steer sharply in an attempt to reenter the roadway. To reduce the risk of rollover in these circumstances, if conditions permit, you should hold the steering wheel firmly and slow down before pulling back into the travel lanes with controlled steering movements.

All Types of Rollover Accidents

As with many kinds of automobile accidents, rollovers can be greatly reduced by doing what all prudent drivers should do, i.e., don't drink and drive, don't drive when tired and don't do anything behind the wheel that could cause a loss of attention to the driving task.

Additional guidelines are set out as follows for your on-road driving.

Know Your Vehicle

Take time to familiarize yourself with the unique handling characteristics of your vehicle by first driving around in an area away from traffic. Practice turning the vehicle at a variety of speeds and in different directions. Get a feel for the greater steering response that your vehicle has over a conventional car.

Wear Your Seat Belts at All Times

The driver and all passengers should be properly restrained at all times, using the seat belts provided. Refer to the "SEAT BELTS" in "FOR SAFE DRIVING" section for instructions on proper use of the seat belts.

Don't Make Sharp Turns

As mentioned before, small multipurpose vehicles have specific design characteristics that allow them to perform in a wide variety of applications. These characteristics also change the cornering behavior relative to conventional passenger cars.
Remember, small multipurpose vehicles have more responsive steering and a higher center of gravity than conventional passenger cars. If at all possible, avoid making sharp turns in your vehicle.

Slow Down on Curves

Learn to approach curves cautiously and at a conservative speed. Do not attempt to take curves at the same speeds that you would in a vehicle with a lower center of gravity. Just as you would not drive a sports car on a trail, you should not attempt to drive your vehicle around curves like a sports car.

Start Driving after Carefully Checking the Surrounding Circumstances

Be sure to always fully check the safety of the surrounding circumstances before beginning to drive.

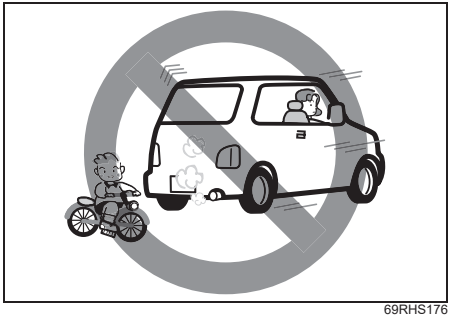

69RHS176

⚠ CAUTION

You cannot check the safety of the surrounding circumstances enough only by the 360 view camera, the rear parking sensors and the inside mirror. When moving the vehicle forward or backward, check the safety of the surrounding circumstances by directly checking with your eyes.

Do not Race the Engine, and Do not Avoid Fast Starts and Rapid Acceleration Just after Engine Start

Refer to “Avoid Fast Starts, Rapid Acceleration and Hard Braking” and “Do not Race the Engine” in the “Improving Fuel Economy” section.

Do not Concentrate on a Mobile Phone or Navigation System

55T060040

⚠ WARNING

- **Do not operate a mobile phone, etc. while driving. Being distracted by phone operation could lead to an accident.**
- **Do not operate navigation/audio equipment, etc. while driving. Otherwise, there is the danger of an accident due to being distracted.**

Do not Reach Through the Steering Wheel

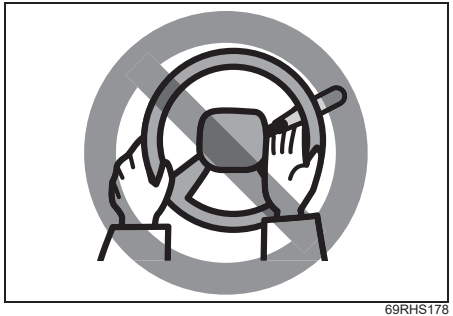

69RHS178

⚠ WARNING

Reaching through the steering wheel could interfere with steering wheel operation and result in an accident.

Do not Drive with Your Foot on the Brake Pedal

⚠ CAUTION

Driving with your foot resting on the brake pedal could cause brake parts to become worn out more quickly than normal or cause brake components to overheat, making them less effective.

When Depressing the Accelerator Pedal and the Brake Pedal Simultaneously

NOTE:
If you depress both the accelerator pedal and the brake pedal simultaneously while driving, the engine power output may be suppressed.

Do not Shift the Gearshift Lever into "N" (Neutral) while Driving

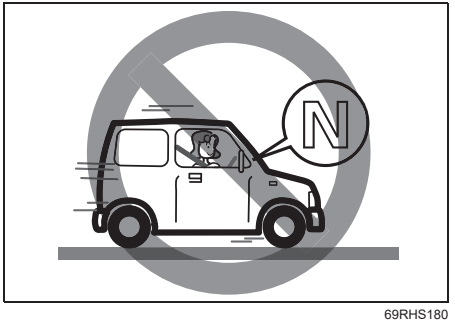

69RHS180

⚠ CAUTION

Do not put the gearshift lever into the "N" (Neutral) position while driving, except in times of emergency, as this disengages engine braking, which could result in an accident.

What Should You Do in Case of Malfunction or Emergency?

- **Warning light turns on**
  Stop immediately in a safe place and take corrective action.
  For details, refer to “Warning Lights and Indicators” in the “QUICK GUIDE” section or “Warning and indicator messages” in the “INSTRUMENT CLUSTER”.
- **You feel strong shock from under the floor**
  Immediately stop in a safe place and check whether there is brake fluid leakage or fuel leakage, and also check whether there is any abnormality in the exhaust pipe, etc. If any abnormality is found, consult with a Maruti Suzuki authorized workshop.
- **Sudden tyre puncture**
  Grasp the steering wheel firmly, carefully apply the brake, slowly reduce speed, and stop in a safe place.
- **You feel that the brake pedal is heavy to use**
  Via engine vacuum pressure, the vehicle utilizes a brake booster to reduce the force necessary for depressing the brake pedal. If this engine vacuum pressure decreases, you may feel as if the brakes require more force than usual to depress, but this is not abnormal. Depress the brake pedal as strongly as you need to.
- **Metallic screeching sound is heard from the brakes**
  Promptly consult with a Maruti Suzuki authorized workshop. The disk brake pads (Maruti Suzuki genuine parts) are designed to emit a creaking/screeching sound as a function to warn the wear, as they have almost reached usage limit and replacement timing.

⚠ WARNING

The brakes could be losing their ability to function normally, which could result in an accident.
If you hear a metallic creaking/screeching sound, do not continue driving.

Use Engine Brake on a Long Downhill Slope

Use engine braking(*) in tandem with regular braking when driving on a long downhill slope. Release the accelerator pedal and shift down according to vehicle speed.

Manual transmission vehicles

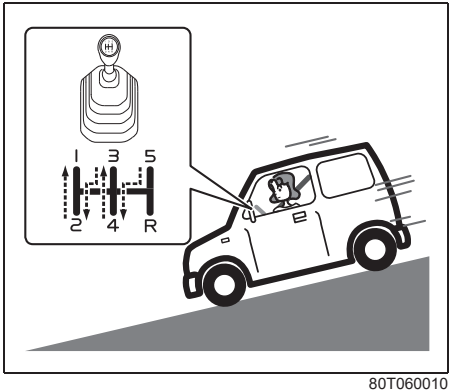

80T060010

For manual transmission vehicle, shift down to a lower gear one by one.

Automatic transmission vehicles

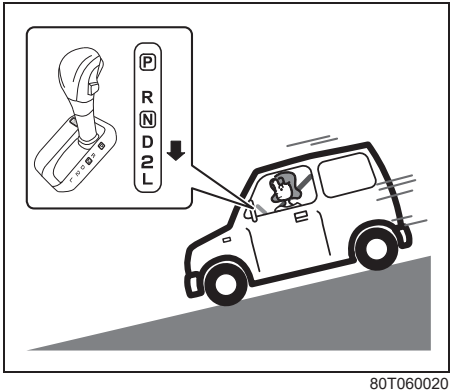

80T060020

For automatic transmission vehicle, turn off the overdrive (O/D) switch or shift the gearshift lever into “2” or “L”.

*: Engine braking is a braking effect that occurs when you release your foot from the accelerator pedal while driving. The lower the gear, the greater the effect of engine braking becomes.

⚠ WARNING

Continuously depressing the brake pedal could cause the brakes to overheat, possibly rendering them ineffective.

When Side Wind Is Strong

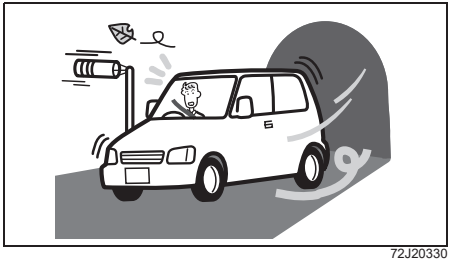

72J20330

At a tunnel exit, on a bridge, or when a large truck passes you, your vehicle might be blown slightly sideways by side wind. Do not panic. Firmly grasp the steering wheel, gradually reduce speed, and regain your intended course.

Drive Slowly on a Slippery Road Surface

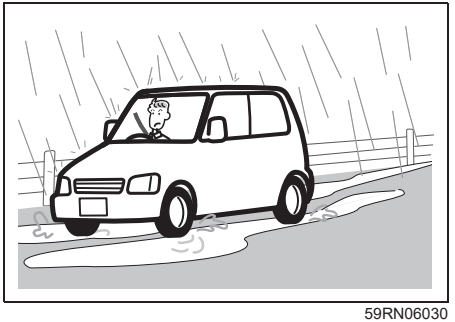

59RN06030

Under wet road conditions you should drive at a lower speed than on dry roads due to possible slippage of tyres during braking. When driving on icy, snow-covered, or muddy roads, reduce your speed and avoid sudden acceleration, abrupt braking, or sharp steering movements. Use 4-wheel drive high range (4H) for better traction.

NOTICE

Never operate your vehicle in “4H” or “4L” on dry pavement and, as much as possible, avoid using “4H” or “4L” on wet pavement, as this puts severe stress on the drive train, especially during tight cornering, and can damage it. Also, you may have some difficulty in steering.

Do not Drive on Puddles at High Speed

69RHS182

⚠ CAUTION

When driving on puddles or on wet road surfaces at high speed, a thin surface of water is built between the wheels and the road surface, and the wheels may float. This is called as hydroplaning, which leads to a loss of control in the steering wheel and the brakes and possibly results in an accident.

Check Brake Effectiveness after Driving on Puddles or Washing a Vehicle

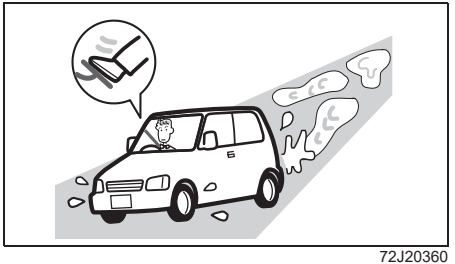

72J20360

- After verifying the safety of the surroundings, depress the brake pedal several times at low speed and check the brake effectiveness.
- If the brake effectiveness is still poor, depress the brake pedal at low speed gently and repeatedly until the brake effectiveness is fully recovered, to dry the brake equipment.

Do not Drive Through Deep or Rushing water

61M0075

Driving in deep or rushing water can be hazardous. You could lose control of the vehicle and the occupants could drown. Also, your vehicle could be seriously damaged. To avoid these risks, observe the following instructions and precautions.

- Do not drive through deep or rushing water. Deep or rushing water, such as fast-moving streams or floodwaters, could carry your vehicle away from your intended path. The water is too deep if it covers your wheel hubs, axles, or exhaust tailpipe. Know the depth of the water before you attempt to drive through it.

If the vehicle goes across the river unavoidably, follow the instructions below before going across the river.

1) Confirm the depth of the river and the terrain.
2) Select the place which is less than 30cm in depth of water. Go across the river to a right angle for the river or lower part of the river
3) Drive slowly at less than 5 km/h not to raise the wave and go across the river immediately to avoid operating the gearshift lever.

If the vehicle goes across the river that is more than 30 cm in depth of water unavoidably, stop the vehicle in a safe place while checking the brake effectiveness. Then, ask your Maruti Suzuki authorized workshop to check the following inspection items.

- Function of brake
- Function of electrical components
- Changes of oil level and quality for engine, transmission and differential. In case that the oil is turbid whitely, water has been mixed in the oil and an oil change is required.
- Lubricant condition of the bearings, suspension joints, etc.
- If water blocks the tailpipe, the engine may not start or run. If the water is deep enough to get drawn into the engine intake system, the engine will be badly damaged.
- Submerged brakes will have poor braking performance. Drive slowly and carefully. Driving slowly will also help avoid water splashing onto the ignition system, which could cause the engine to stall.
- Even when driving through shallow or still waters, drive carefully since the water may be hiding ground hazards such as holes, ditches, or bumps.

⚠ WARNING

In addition to following the driving tips in this section, it is important to observe the following precautions for on-road and off-road driving.

- **Driver and passengers should wear seat belts at all times.**
- **Do not let anyone else drive your vehicle unless they are also aware of the vehicle characteristics and handling differences described in this section.**
- **Avoid loaning your vehicle to anyone unless you accompany them.**
- **Make sure your tyres are in good condition and always maintain the specified tyre pressure. Refer to “Tyres” in the “INSPECTION AND MAINTENANCE” section for details.**

(Continued)

⚠ WARNING

(Continued)

- **Do not use tyres other than those specified by Maruti Suzuki. Never use different sizes or types of tyres on the front and rear wheels. For information regarding the specified tyres, refer to the "SPECIFICATIONS" section.**
- **Never use oversized tyres or special shock absorbers and springs to raise (jack up) your vehicle. This will raise the center of gravity of the vehicle and change its handling characteristics.**
- **After driving through water, mud, or sandy ground, test the brakes while driving at a slow speed to see if they have maintained their normal effectiveness. If the brakes are less effective than normal, dry them by repeatedly applying the brakes while driving slowly until the brakes have regained their normal effectiveness.**
- **After extended operation in mud, sand or water, have the brakes bearings and joint parts etc. Ask your Maruti Suzuki authorized workshop for inspection as soon as possible**

Highway Driving

When driving at highway speeds, pay attention to the following:

- Stopping distance progressively increases with vehicle speed. Apply the brakes far enough ahead of the stopping point to allow for the extra stopping distance.
- On rainy days, hydroplaning can occur. Hydroplaning is the loss of direct contact between the road surface and the vehicle's tyres due to a water film forming between them. Steering or braking the vehicle during hydroplaning can be very difficult, and loss of control can occur. Keep speed down when the road surface is wet.
- At high speeds, the vehicle may be affected by side winds. Therefore, reduce speed and be prepared for unexpected buffeting, which can occur at the exits of tunnels, when passing by a cut of a hill, or when being overtaken by large vehicles, etc.

Driving on Hills

Manual transmission vehicles

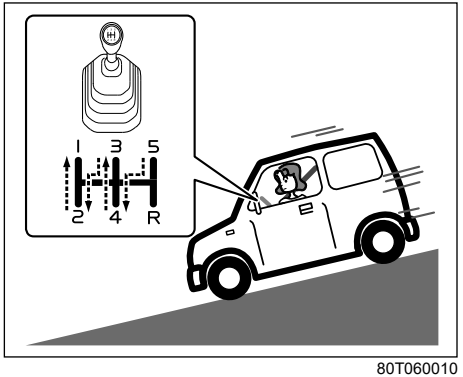

80T060010

Automatic transmission vehicles

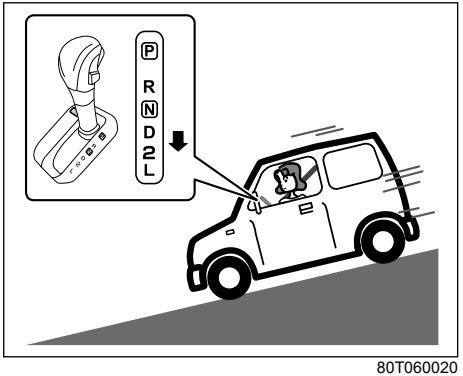

80T060020

- When driving on steep hills, the vehicle may begin to slow down and show a lack of power. If this happens, you should shift to a lower gear so that the engine will again be operating in its higher power range. Shift rapidly to prevent the vehicle from losing momentum.
- When driving down a hill, the engine should be used for braking by shifting to the next lower gear.

⚠ WARNING

Do not hold the brake pedal down too long or too often while going down a steep or long hill. This could cause the brakes to overheat, resulting in reduced braking efficiency. Failure to take this precaution could result in loss of vehicle control.

NOTICE

When descending a downhill, Never turn the ignition key to "LOCK" position or press the engine switch to change the ignition mode to LOCK (OFF). Emission control system and automatic transmission damage may result.

Off-road Driving

Your vehicle has specific design characteristics for off-road driving. When you leave the paved road, you will encounter driving surfaces of all kinds which may change continually as you drive. In most cases, off-road driving requires the use of 4-wheel drive.

Use Caution on Steep Inclines

Always inspect hills before you attempt to drive up them. Know what is on the other side and how you will get back down. If you have any doubt that it is safe, do not attempt to drive over a hill. Never drive your vehicle up an extremely steep incline. Coming down a steep hill can be trickier than getting up one. Keep the vehicle heading straight down the hill and use low gear. Do not lock the brakes. If the vehicle begins to slide, accelerate slightly to regain steering control.

Do not Drive Across the Side of Hills

Driving across the side of a hill can be extremely hazardous. Most of the vehicle's weight will be transferred to the downhill tyres, which could result in the vehicle rolling sideways. Whenever possible, avoid this potential hazard. Also, if you have to exit your vehicle on a side-hill, always get out on the uphill side.

Wear Your Seat Belts at All Times

You and your passengers should use the seat belts at all times when driving off-road. For proper seat belt use, refer to the "Seat Belts" in "FOR SAFE DRIVING" section in this manual.

Avoid Sudden Reactions in Mud, Ice, or Snow

Be careful when off-road conditions are slippery. Reduce your speed and avoid sudden movements of the vehicle. Be aware that driving in deep snow or mud can cause a loss of traction and an increase in the resistance to the vehicle's forward motion. Use 4WD low gear (4L) and maintain a steady but moderate speed with a light touch on the steering wheel and brakes.

Snow chains

Snow chains should only be used if they are needed to increase traction or are required by law. Check that the chains you use are the correct size for your vehicle's tyres.
Also check that there is enough clearance between the fenders and the chains as installed on the tyres.
Install the chains on the rear tyres tightly, according to the chain manufacturer's instructions. Retighten the chains after driving about 1.0 km if necessary. With the chains installed, drive slowly.

NOTICE

If you hear the chains hitting against the vehicle body while driving, stop and tighten them.

Do not Drive in the Field Covered with Grown Grass

69RHS181

Do not drive in the field covered with grown grass If you drive in the field covered with grass, it may cause accident or fire or vehicle damage by getting caught in grown grass.

⚠ WARNING

If loose grass, etc. becomes entangled in drive train parts or exhaust pipes, drive train components might become damaged or fire may result.

If Your Vehicle Gets Stuck

If your vehicle gets stuck in snow, mud, or sand, follow the directions below:

1) Shift the transfer shift lever into the "4L" position.
   Refer to "Transfer Lever" in "OPARATING YOUR VEHICLE" section for details.
2) Shift the transmission back and forth between a forward range (or first gear for manual transmission) and reverse. This will create a rocking motion which may give you enough momentum to free the vehicle. Press gently on the accelerator to keep wheel spin to a minimum. Remove your foot from the accelerator while shifting.
   Do not race the engine. Excessive wheel spin will cause the tyres to dig deeper, making it more difficult to free the vehicle.
3) If your vehicle remains stuck after a few minutes of rocking, get another vehicle to pull you out.

⚠ WARNING

Do not allow anyone to stand near the vehicle when you are rocking it, and do not spin the wheels faster than an indicated 40 km/h on the speedometer. Personal injury and/or vehicle damage may result from spinning the wheels too fast.

(Continued)

⚠ WARNING

(Continued)

55T060070

- **In addition to following the driving tips in this section, it is important to observe the following precautions.**
  - **Check that your tyres are in good condition and always maintain the specified tyre pressure. Refer to "Tyres" in "INSPECTION AND MAINTENANCE" section for details.**
  - **Do not use tyres other than those specified by Maruti Suzuki. Never use different sizes or types of tyres on the front and rear wheels. For information regarding the specified tyres, refer to the tyre information label located on the driver's door lock pillar.**

(Continued)

⚠ WARNING

(Continued)

- **Never use oversized tyres or special shock absorbers and springs to raise (jack up) your vehicle. This will change the handling characteristics. Oversized tyres may also rub against the fender over bumps, causing vehicle damage or tyre failure.**
- **After driving through water, test the brakes while driving at a slow speed to see if they have maintained their normal effectiveness. If the brakes are less effective than normal, dry them by repeatedly applying the brakes while driving slowly until the brakes have regained their normal effectiveness.**

NOTICE

- **Release the accelerator pedal when operating the gearshift lever or the transfer lever. Operating the gearshift lever or the transfer lever with the engine racing can damage the gears and the free axle mechanism.**
- **Do not continue rocking the vehicle for more than a few minutes. Prolonged rocking can cause engine overheating, transmission, transfer case, axles, propeller shaft or differential damage, or tyre damage.**

Improving Fuel Economy

NOTE:
Fuel economy (mileage) of the vehicle may vary due to several factors i.e. driving habits- gear change pattern, usage of A.C, Air pressure in the tyres, wind speed, traffic conditions, fuel quality-non adulterated standard fuel, maintenance of vehicle, road conditions, braking etc.

The following instructions will help you improve fuel economy.

Keep Tyre Pressures Correct

Under-inflation of the tyres can waste fuel due to increased running resistance of the tyres. Keep your tyres inflated to the correct pressure shown on the label on the driver's side door or the driver's door lock pillar.

Keep Weight to a Minimum

The heavier the load is, the more fuel the vehicle consumes. Unload any unnecessary luggage or cargo.

Avoid Excessive idling

If you park your vehicle for more than one minute, stop the engine and start it again later. When warming up a cold engine, do not allow the engine to idle or apply full throttle until the engine has reached operating temperature. Allow the engine to warm up by driving.

Avoid Fast Starts, Rapid Acceleration and Hard Braking

Avoid fast starts
Fast starts away from lights or stop signs will consume fuel unnecessarily and shorten engine life. Start off slowly.

Avoid unnecessary stops
Avoid unnecessary deceleration and stopping. Try to maintain a moderate, steady speed whenever possible. Slowing down and then accelerating again uses more fuel.

Keep a steady cruising speed
Drive at a constant speed that road and traffic conditions will permit.

Do not Race the Engine

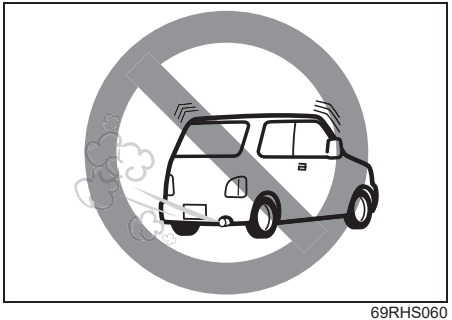

69RHS060

Revving the engine only consumes extra fuel and has no benefit.

NOTICE
Immediately after starting, the engine is often not yet fully warmed up. Therefore, revving the engine, starting to drive suddenly, or rapid acceleration can cause engine failure.

Drive with an Appropriate Gear for Vehicle Speed

Running the vehicle at a high engine rotation speed by using a low-speed gear will result in poor fuel economy. Use the correct gear according to the vehicle speed.

Keep the Air Cleaner Clean

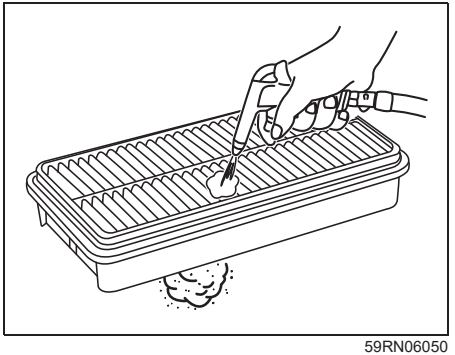

59RN06050

If the air cleaner is clogged with dust, there will be greater intake resistance, resulting in decreased power output and increased fuel consumption.

Precaution for Handling Vehicle

Do not Apply Strong Force to Exterior Parts

NOTICE

Do not apply strong force to the body panel, front and rear bumper, side sill splash guards, etc. These forces can cause damage to these exterior parts.

Be Careful of Uneven Road Surface

NOTICE

In the following cases, the bumper or the lower part of the vehicle could get damaged. Ensure proper care.

- **Entering the areas where there is uneven road surface, such as road shoulder**
- **Driving on roads with grooves, bumps or potholes**

Do not Modify Your Vehicle Illegally

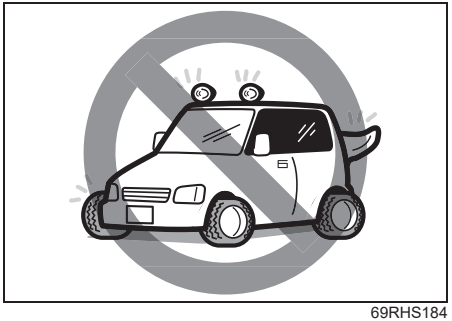

69RHS184

⚠ WARNING

- **If you modify your vehicle illegally, there is a danger of a fire or an accident. Illegal modifications might adversely affect handling, performance or durability. Also, this could even violate laws and ordinances.**
  Do not install unsuitable parts to your vehicle or do not make your own adjustments or wiring.

(Continued)

⚠ WARNING

(Continued)

- **Do not use wheels or wheel nuts other than specified Maruti Suzuki genuine products. Doing so could lead to accidents, such as nuts loosening and the wheel coming off while driving. Also, fuel consumption and driving stability could worsen, or it could result in other malfunctions.**

NOTICE

- **When installing or removing electrical equipment such as radio equipment, navigation, audio equipment or electronic toll control equipment, consult with a Maruti Suzuki authorized workshop. Also, do not operate electrical equipment directly from the battery terminals or connect ground wires directly. Otherwise, there is a danger of hindering the functioning of electronic components, causing fire, malfunction, battery runout, etc.**

(Continued)

NOTICE

(Continued)

- **Only a troubleshooting device designed for inspection and maintenance for this model can be connected to the vehicle's onboard diagnostics system. Connecting a device other than that specified could hinder the functioning of electronic components and cause battery runout, etc.**

When Installing, Removing and Repairing Parts

⚠ WARNING

The SRS airbag system and the seat belt pretensioner system could activate unexpectedly or could be rendered ineffective if the parts that affect their functions are adjusted or arranged. In the following cases, these systems will be adversely affected. Consult with a Maruti Suzuki authorized workshop beforehand.

- **When removing the steering wheel and conducting repairs around the steering wheel, etc.**
- **When conducting repairs around the center console, around the instrument cluster, under the front seats or to electrical wiring**
- **When installing audio equipment, etc.**
- **When conducting sheet metal painting or repairs around the dashboard**
- **When replacing the front seats or conducting repairs around the seats**
- **Repairs around the front pillar, the back pillar or the roof side**
- **When conducting repairs around the center pillar**

Be Careful When Placing Accessories

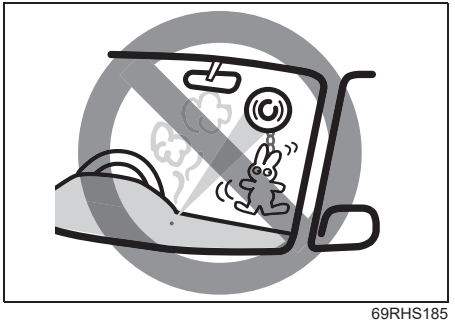

69RHS185

⚠ WARNING

Do not attach accessories to the window glasses. Accessories and suction cups could hinder vision, or a suction cup could act as a lens and cause a fire. Also, if an airbag is activated, such accessories could be ejected outward within the vehicle, possibly resulting in injury.

When Spilling Drinks or Liquids

⚠ WARNING

Do not allow liquids to spill, splash or spray inside the vehicle. The following items could malfunction, or fire could result. In the case of spilling drinks, etc., promptly consult with a Maruti Suzuki authorized workshop.
- **SRS airbag system**
- **Audio equipment**
- **Electrical parts such as switches and wiring**
- **Movable parts such as the gearshift lever or seat belt buckles**

NOTICE

The sensor of the seat belt reminder is built into the front passenger's seat cushion.
If you spill liquid such as soft drinks or juice, the sensor of the seat belt reminder may be damaged.
If you spill any liquid on the seat cushion, immediately wipe it with a soft cloth.

When Replacing Engine Oil

Replace engine oil regularly

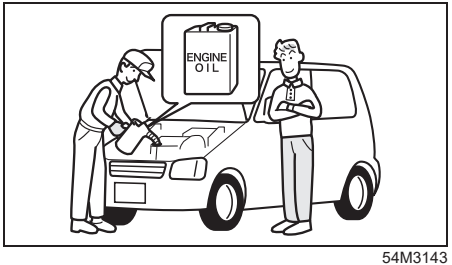

54M3143

- If the vehicle is normally used, replace the engine oil and filter every 15,000 km or every 12 months, whichever is earlier.
- When the vehicle is used under severe driving conditions, the engine oil and filter replacement is required earlier than the case that the vehicle is normally used.

NOTICE

Observe the periods designed for the engine oil and filter replacement. Degraded oil or clogged filters can cause engine malfunction or abnormal noise. For replacement, consult with a Maruti Suzuki authorized workshop.

Specification and viscosity of engine oil
As performance factors such as fuel consumption depend on the engine oil used, use oil that satisfies the specifications in the following Table 1 and Table 2. Using Maruti Suzuki genuine oil is recommended.

Table 1

Specification		Oil quality
API(*1)	ILSAC(*2)	
SP	GF-6	
SN	–	
SM	–	
SL	–	

Table 2

For India

Specification	All vehicles
Viscosity: SAE(*3)	0W-16

Except for India

Specification	All vehicles
Viscosity: SAE(*3)	0W-16, 0W-20, 5W-30, 10W-30, 10W-40, 15W-40, 20W-40

*1: The API standard is determined by the American Petroleum Institute and represents the quality grade of engine oil.
*2: The ILSAC standard is an engine oil standard for automobiles, established by the International Lubricant Specification Advisory Committee, and is based on the API standard while indicating even higher performance specifications such as for fuel conservation and durability.
*3: SAE viscosity is a standard that determines the viscosity of lubricating oil. The number on the left side (the number with a “W”) means the viscosity at low temperature. The smaller this figure is, the stronger the oil resistance to coldness is and the better the engine start capability is. The number on the right side means the viscosity at high temperature. The larger this figure is, the stronger the oil resistance to heat is and the better the engine protection performance is.

Running-in

NOTICE

The future performance and reliability of the engine depends on the care and restraint exercised during its early life. It is especially important to observe the following precautions during the first 960 km of vehicle operation.

- **After starting, do not race the engine. Warm it up gradually.**
- **Avoid prolonged vehicle operation at a constant speed. Moving parts will break in better if you vary your speed.**
- **Start off from a stop slowly. Avoid full throttle starts.**
- **Avoid hard braking, especially during the first 320 km of driving.**
- **Do not drive slowly with the transmission in a high gear.**
- **Drive the vehicle at moderate engine speeds.**
- **Do not tow a trailer during the first 960 km of vehicle operation.**

Catalytic Converter

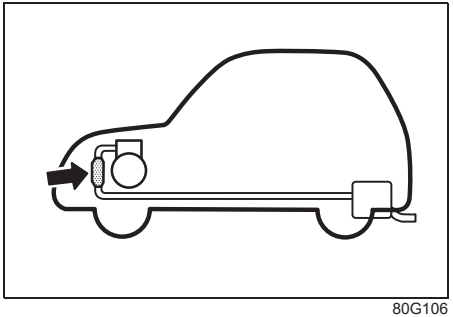

80G106

The purpose of the catalytic converter is to minimize the amount of harmful pollutants in your vehicle’s exhaust. Use of leaded fuel in vehicles equipped with catalytic converters is prohibited, because lead deactivates the pollutant-reducing components of the catalyst system.

The converter is designed to last the life of the vehicle under normal usage and when unleaded fuel is used. No special maintenance is required on the converter. However, it is very important to keep the engine properly tuned. Engine misfiring, which can result from an improperly tuned engine, may cause overheating of the catalytic converter. This may result in permanent heat damage to the catalytic converter and other vehicle components.

NOTICE

To minimize the possibility of catalytic converter or other vehicle damage:

- **Maintain the engine in the proper operating condition.**
- **In the event of an engine malfunction, particularly one involving engine misfire or other apparent loss of performance, have the vehicle serviced promptly.**
- **Do not turn off the engine or interrupt the ignition when the transmission is in gear and the vehicle is in motion.**
- **Do not try to start the engine by pushing or towing the vehicle, or coasting down a hill.**
- **Do not idle the engine with any spark plug wires disconnected or removed, such as during diagnostic testing.**
- **Do not idle the vehicle for prolonged periods if idling seems rough or there are other malfunctions.**
- **Do not allow the fuel tank to get near the empty level.**

59RN06060

⚠ WARNING

Be careful where you park and drive; the catalytic converter and other exhaust components can get very hot. As with any vehicle, do not park or operate this vehicle in areas where combustible materials such as dry grass or leaves can come in contact with a hot exhaust system.

OTHER CONTROLS AND EQUIPMENT

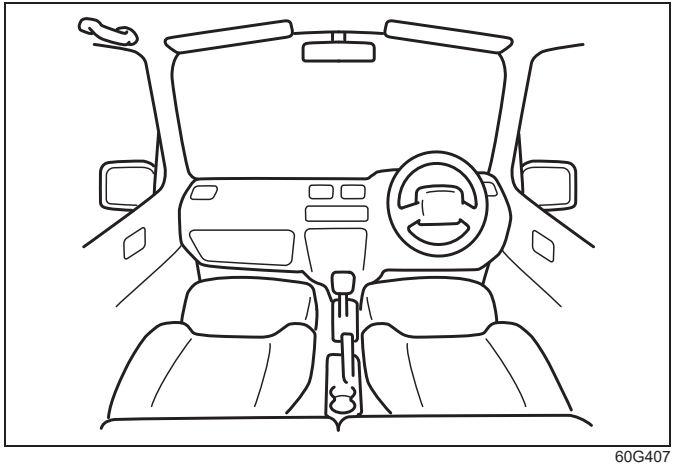

60G407

Fuel Filler Opening 7-1
Refueling 7-2
Hood 7-4
Sun Visor 7-6
Interior Light 7-7
Accessory Socket 7-9
Drink Holder 7-10
Storage Area 7-12
Assist Grips 7-13
Ride-in Assist Grip 7-13
Footrest (if equipped) 7-14
Door Pocket 7-14
USB Socket 7-15
Seatback Pocket 7-15
Frame Hooks 7-15
Heating and Air Conditioning System 7-17
Manual Heating and Air Conditioning System 7-19
Automatic Heating and Air Conditioning System (climate control) 7-25
Radio Antenna 7-32
Installation of Radio Frequency Transmitters 7-32
Audio Function 7-33
Remote Audio Controls (if equipped) 7-33

Fuel Filler Opening

Make sure to read “Refueling” in this section.

⚠ WARNING

Be sure to observe the following points when refueling. Otherwise, gasoline may catch a fire from fuel and it may cause a fire.

- **Always stop the engine first.**
- **Close all the doors and windows when refueling.**
- **As gasoline is highly flammable, open sparks such as lit cigarettes are strictly prohibited.**

Fuel Filler Door

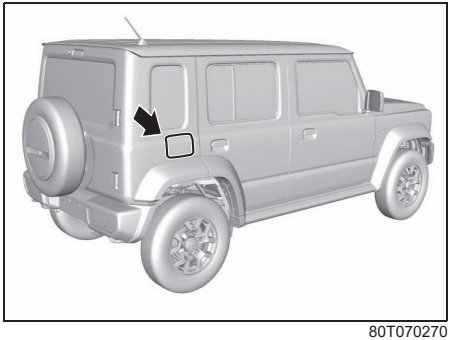

80T070270

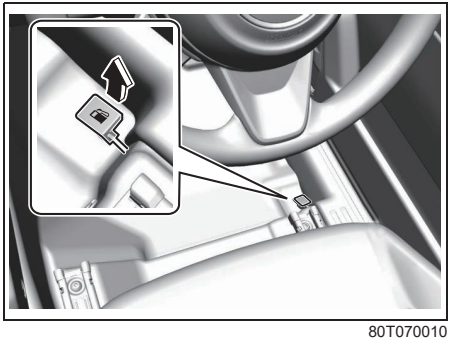

80T070010

A fuel filler cap is located on the right rear side of the vehicle. The fuel filler door can be unlocked by pulling up the opener lever located on the outboard lower side of the driver’s seat and locked by simply closing the door.

Fuel Filler Cap

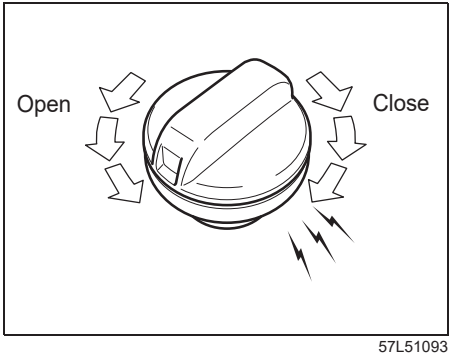

57L51093

- To open the fuel filler cap, turn it counter-clockwise.
- To close the fuel filler cap, turn it clockwise until you hear more than 2 clicks.

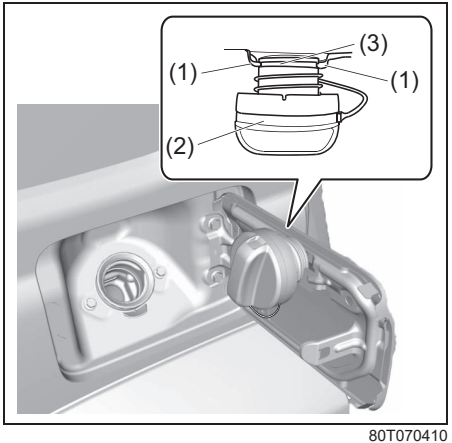

80T070410

NOTE:
The cap holder (1) holds the fuel filler cap (2) by hooking the groove (3) when refueling.

⚠ WARNING

- **If you open the fuel filler cap suddenly, fuel may be under pressure and may spray out. Loosen the fuel filler cap slowly. After air deflating sound stops, open the fuel filler cap.**
- **If fuel spills out, an accident such as a fire may occur. Also, if you leave spilled fuel as it is, it may cause paint staining, discoloration or cracking. Be careful not to spill out fuel. If you spill it out, wipe it off with a soft cloth.**
- **If the fuel filler cap is not closed securely, it may cause fuel leakage or a fire. After refueling, close the fuel filler cap until you hear more than 2 clicks.**
- **If you use the fuel cap other than a genuine Maruti Suzuki cap, it may cause fuel leakage. Do not use the fuel cap other than a genuine Maruti Suzuki cap.**

Refueling

Watch Out for Fire

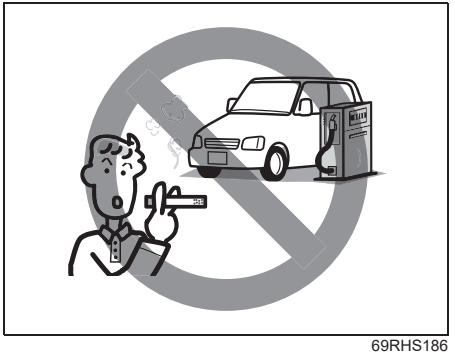

69RHS186

⚠ WARNING

Be sure to observe the following points when refueling. Otherwise, gasoline may catch a fire from fuel and it may cause a fire.

- **Always stop the engine first.**
- **Close all the doors and windows when refueling.**
- **As gasoline is highly flammable, open sparks such as lit cigarettes are strictly prohibited.**

When Refueling at a Self-service Gas Station

⚠ WARNING

When refueling at a self-service gas station, be sure to observe the following points.

- **If substantial static electricity is accumulated within your body, a spark could ignite fuel vapors and possibly cause burns. Before opening the fuel filler cap, discharge any static electricity* that might have accumulated in your body, by touching a metal part of the vehicle body or the gas pump machine. In addition, do not re-enter the vehicle while refueling, as static electricity could be charged to your body again.**
- **Do not allow others who have not discharged their static electricity to come close to the fuel filler opening.**

  ***Take special care when air is dry, as this can cause your body to become charged with static electricity more easily. In addition, wearing layers of clothing can generate static electricity due to the friction of the fibers.**

(Continued)

⚠ WARNING

(Continued)

- **If you open the fuel filler cap suddenly, fuel may be under pressure and may spray out. Loosen the fuel filler cap slowly. After air deflating sound stops, open the fuel filler cap.**
- **If you do not insert the fuel filler nozzle securely into the fuel filler opening, fuel may spill out. Insert the fuel filler nozzle securely into the fuel filler opening until it stops.**
- **Pull the gas pump filler nozzle lever until it stops.**

(Continued)

⚠ WARNING

(Continued)

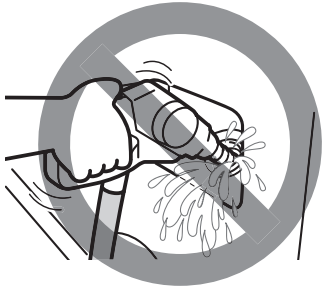

69RHS070

- **If you continue to refuel after the automatic stop to top up the tank, fuel could overflow. When the automatic stop function of gas pump filler nozzle is activated, stop refueling.**

  ***Depending on the type of gas pump machine being used, the automatic stop function could activate early and refueling might not be possible. Please follow the instructions of the employees at the gas station.**

(Continued)

⚠ WARNING

(Continued)
- **If fuel spills out, an accident such as a fire may occur. Also, if you leave spilled fuel as it is, it may cause paint staining, discoloration or cracking. Be careful not to spill out fuel. If you spill it out, wipe it off with a soft cloth.**
- **If the fuel filler cap is not closed securely, it may cause fuel leakage or a fire. After refueling, return the fuel filler nozzle to its original position and close the fuel filler cap until you hear more than 2 clicks.**
- **Fuel contains substances harmful to the human body. Do not breathe in vaporized fuel.**
- **In addition, be sure to observe all the warnings posted at the gas station.**

Use Unleaded Gasoline Only

NOTICE

Using leaded gasoline, low-quality gasoline or other types of fuel (such as alcohol and diesel oil) can cause harmful effects to the engine and fuel delivery system.
Do not use fuel other than unleaded gasoline.

Hood

⚠ WARNING

- **As the hood is heavy, if a child tries to open or close it, the child may get injured. Do not allow a child to open or close the hood.**
- **As the engine compartment becomes hot, it may cause burns. When opening the hood, do not allow a child to come close to the hood.**
- **If you leave any tool or cloth in the engine compartment, it may cause a malfunction. Also, as the engine compartment becomes hot, it may result in vehicle fire. Do not leave any tool or cloth for inspection or cleaning in the engine compartment.**

⚠ CAUTION

If you come close to a running drive belt or a cooling fan (radiator fan), hands, hair, clothing, etc. may be caught and you may get injured. When the engine is running, keep away from the drive belt or the cooling fan (radiator fan).

Opening the Hood

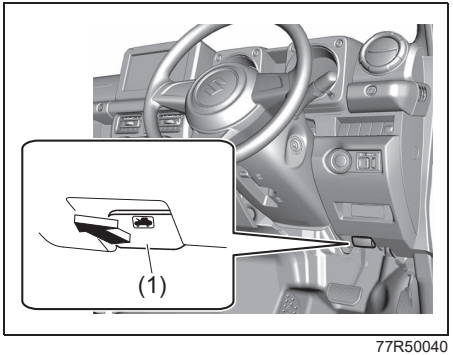

77R50040

1) Pull up the hood release lever (1) located under the driver's side instrument panel in the outboard position. This will disengage the hood lock halfway.

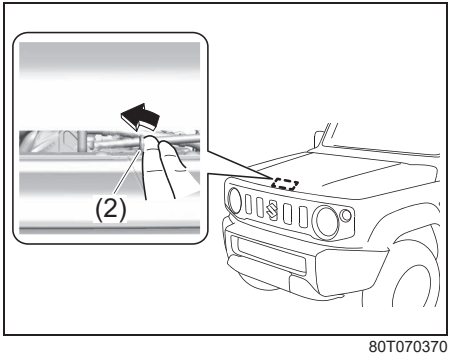

80T070370

2) Push the under-hood release lever (2) sideways with your finger, as shown in the illustration. While pushing the lever, lift up the hood.

⚠ CAUTION

The under-hood release lever can be hot enough to burn your finger while the engine is running or right after the engine stopped.
If you try to open the hood while the engine is running or right after the engine stopped, touch the under-hood release lever after it becomes cool enough.

NOTICE

If you lift up the hood with the wiper arms raised, the wiper arms and the hood may get damaged.
Do not lift up the hood with the wiper arms raised.

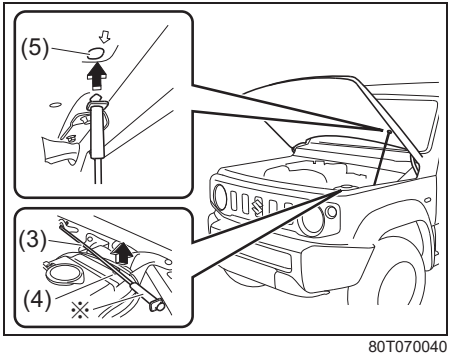

80T070040

3) While holding the hood, pull the prop rod (3) out from the holding clip (4), and then insert the end of the rod into the designated hole (5).

⚠ CAUTION

- **The prop rod can be hot enough to burn your finger while the engine is running or right after the engine stopped. If you would like to use the prop rod while the engine is running or right after the engine stopped, touch the prop rod after it becomes cool enough.**
- **If the prop rod slips out, you may get caught in the closing hood. Insert the end of the prop rod into the hole securely.**
- **The prop rod may slip out when the hood is blown by wind. If this occurs, you may get caught in the closing hood. Be very careful when you open the hood on a windy day.**

NOTE:
When you pull out the prop rod from the holding clip, hold the ※ part.

Closing the Hood

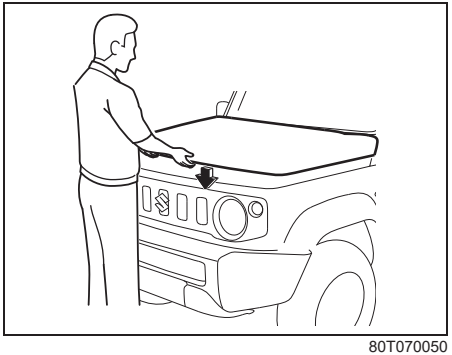

80T070050

1) Lift up the hood slightly and remove the prop rod from the hole. Put the prop rod back into the holding clip.

2) Lower the hood to about 20 cm above the hood latch, and then let it drop down. Check that the hood is securely latched after closing.

⚠ WARNING

If the hood is not fully closed, it can fly up unexpectedly during driving, obstructing your view and resulting in an accident. Check that the hood is fully closed and latched before driving.

⚠ CAUTION

When closing the hood, the occupant's body such as hands may get caught in the hood and get injured. Also, pushing on the hood from the top may damage it.
When closing the hood, check that no part of the occupant's body such as hands is in the path of the hood.

NOTICE

Pushing on the hood from the top may damage it.

Sun Visor

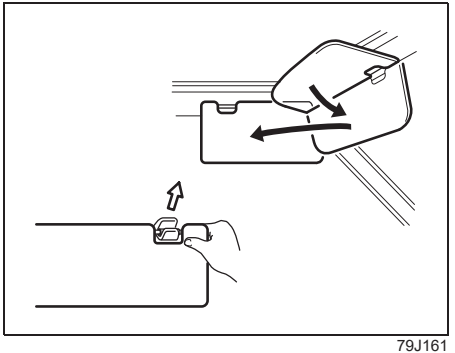

79J161

The sun visors can be pulled down to block glare coming through the windshield, or they can be unhooked and turned to the side to block glare coming through the side window.

NOTICE

When unhooking and hooking a sun visor, handle it by the hard plastic parts or the sun visor can be damaged.

Card Holder

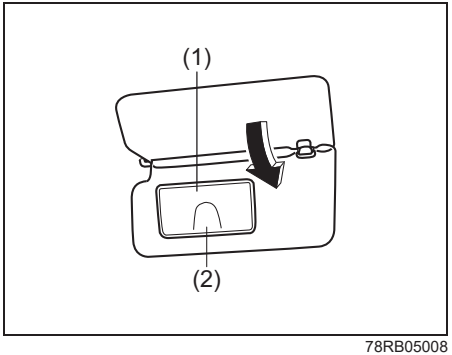

78RB05008

(1) Mirror cover
(2) Card holder

You can put a card in the card holder (2) on the back of the sun visor.

NOTICE

If you park your vehicle outdoors in direct sunlight in hot weather, the inside of the vehicle will become hot. The heat may distort or crack a card. When you park your vehicle outdoors in direct sunlight or in hot weather, do not leave plastic cards in the card holder.

Vanity Mirror

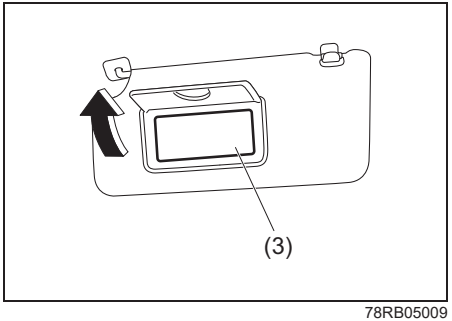

78RB05009

(3) Vanity mirror

To use the vanity mirror (3) on the back of the sun visor, pull up the mirror cover (1).

⚠ WARNING

- **If you use the vanity mirror while driving, you may lost control of the vehicle, resulting in an accident. Do not use the vanity mirror while driving.**
- **Do not place any object on the location where an airbag is stored or come close to the location where airbag is stored, when using a vanity mirror. Doing so may cause the airbag to deploy and cause serious injury due to the impact of airbag.**

Interior Light

NOTICE

If you turn on the interior light for a long time with the engine stopped, the lead-acid battery may discharge. Do not turn on the interior light for a long time with the engine stopped.

Front

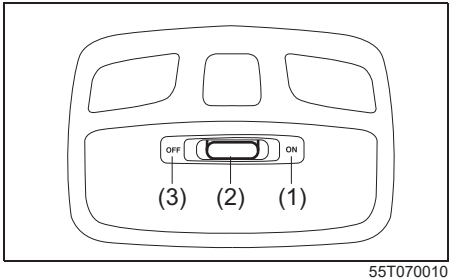

55T070010

This light switch has three positions which function as described below:

ON (1)
The light comes on and stays on regardless of whether the door is open or closed.

NOTE:
The light will automatically be turned off to prevent the lead-acid battery from discharging when the following conditions are simultaneously met:
- *The ignition switch is in "LOCK" position or the ignition mode is LOCK (OFF).*
- *The hazard warning lights, the position lights and the headlights are off.*
- *15 minutes passed after the light is turned on.*

DOOR (2)
The light comes on when the door is opened. After closing all doors, the light will remain on for about 15 seconds and then fade out. If you insert the key, or press the engine switch to change the ignition mode to ACC or ON during this time, the light will start to fade out immediately. After removing the key from the ignition switch or press the engine switch to change the ignition mode to LOCK (OFF), the light will turn on for about 15 seconds and then fade out.

NOTE:
The light will automatically be turned off to prevent the lead-acid battery from discharging when the following conditions are simultaneously met:
- *The ignition switch is in "LOCK" position or the ignition mode is LOCK (OFF).*
- *About 15 minutes passed after the light is turned on.*

OFF (3)
The light remains off even when the door is opened.

Center

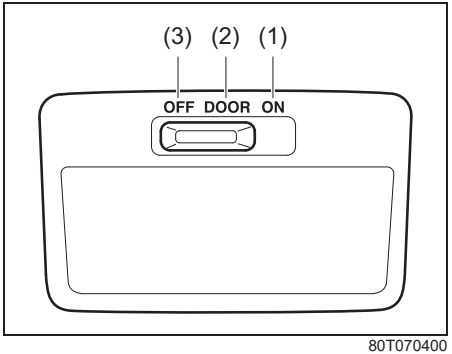

80T070400

This light switch has three positions which function as described below:

ON (1)
The light comes on and stays on regardless of whether the door is open or closed.

NOTE:
If your vehicle is equipped with the keyless push start system or the keyless entry system, the light will automatically be turned off to prevent the lead-acid battery from discharging when the following conditions are simultaneously met:
- *The ignition switch is in the "LOCK" position, or the ignition mode is LOCK (OFF).*
- *The hazard warning lights, the position lights and the headlights are off.*
- *After 15 minutes of the light on.*

DOOR (2)
- The light comes on when the door is opened. After closing all doors, the light will remain on for 15 seconds and then fade out. If you insert the key, or press the engine switch to change the ignition mode to ACC or ON during this time, the light will start to fade out immediately. After removing the key from the ignition switch or press the engine switch to change the ignition mode to "LOCK" (OFF), the light will turn on for 15 seconds and then fade out.
- When the ignition switch is in LOCK position, or the ignition mode is LOCK (OFF), to prevent the lead-acid battery from discharging, the light will automatically be turned off when a period of 15 minutes has elapsed after any of the doors (including the tailgate) is opened and other operations are not done.

OFF (3)
The light remains off even when the door is opened.

Luggage Compartment Light

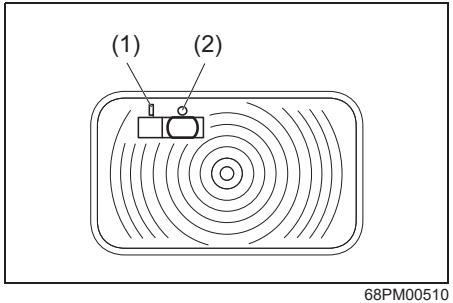

68PM00510

When you open the tailgate with the luggage compartment light switch in the “ON” position (1), the light comes on for about 15 minutes.
When the luggage compartment light switch is in the “OFF” position (2), the light remains off regardless of whether the tailgate is open or close.

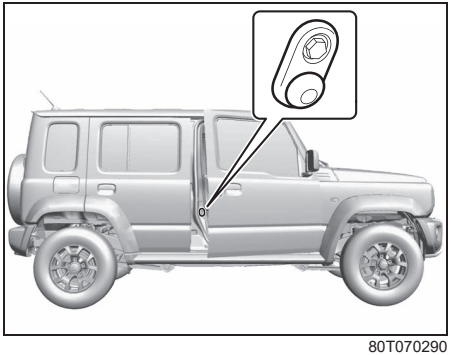

80T070290

NOTE:
The number of doors involved in the lighting operation of the interior light depends on the vehicle specification. If there is a switch (rubber protrusion) at the door opening as shown, the door is involved in the lighting operation. The tailgate is also involved in this operation even without the rubber protrusion.

Accessory Socket

Center Console

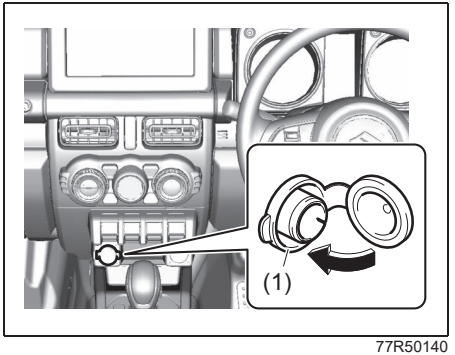

77R50140

Luggage Compartment

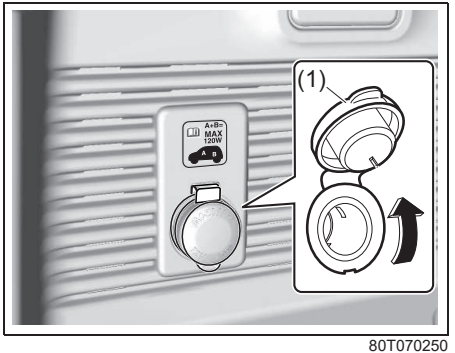

80T070250

The accessory socket will work when the ignition switch is in “ACC” or “ON” position or the engine switch is in ACC or ON mode.
This socket can be used to provide 12 volt/ 120 watt/10 ampere power for electrical accessories. Check that the rubber cap remains on the socket when the socket is not in use.
When using the accessory socket, open the rubber cap (1).

⚠ WARNING

When the accessory socket is not in use, closed the rubber cap. If any foreign material enters the accessory socket, it may cause a malfunction or short circuit.

NOTICE

- **To prevent the fuse from being blown, when using sockets at the same time, do not exceed the total combined power capacity of 12 volt/120 watt/10 ampere.**
- **Use of inappropriate electrical accessories can cause damage to your vehicle’s electrical system. Check that any electrical accessories you use are designed to plug into this type of socket.**

(Continued)

NOTICE

(Continued)

- **Check that the cap remains on the socket when the socket is not in use.**
- **When the ignition switch is in “LOCK” position or the ignition mode to LOCK (OFF) during using the accessory socket, the following accidents may occur;**
  - **the audio or navigation system does not turn off.**
  - **the keyless entry system does not work, etc.**

If they occur, disconnect the item from the accessory socket and check whether the electrical equipments work properly.
If the problem persists, ask your Maruti Suzuki authorized workshop for inspection.

Drink Holder

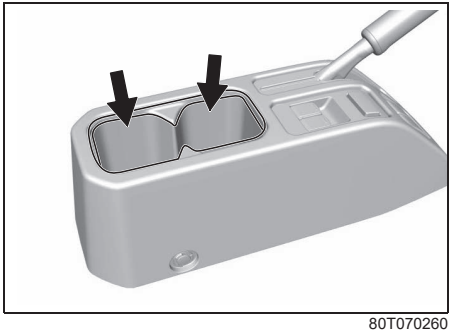

80T070260

Use the drink holder to put a cup with a lid or a bottle with a cap. Also, you can put small articles in the drink holder.

⚠ WARNING

Failure to take the precautions listed below could cause personal injury or vehicle damage.

- **Be careful when you are using the cup holders to hold a cup containing hot liquid. Spilling out hot liquid can cause burn injury.**
- **Do not use the cup holders to hold sharp-edged, hard or breakable objects. Objects in the cup holders may be thrown about during a sudden stop or impact, and could cause personal injury.**
- **Be careful not to spill liquid or insert any foreign materials into the moving part of the gearshift lever, or any electrical components. Liquid or foreign materials may damage these parts.**
- **If you spill, or drop liquid accidentally, have your vehicle inspected by a Maruti Suzuki authorized workshop.**

NOTE:

- *If you place the keyless remote controller in a drink holder or a bottle holder, it may not be detected.*
- *If you spill or drop liquid accidentally, have your vehicle inspected by a Maruti Suzuki authorized workshop.*

Storage Area

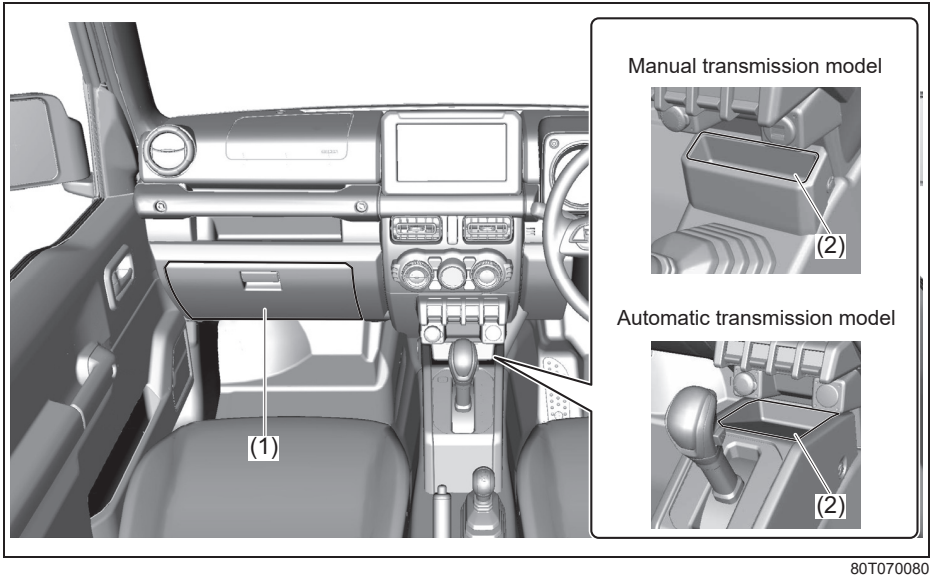

80T070080

(1) Glove box
(2) Floor console tray

Each item in the figure is a typical example; the actual equipment depends on the vehicle type.

⚠ WARNING

- **If any object gets caught in the brake pedal or the accelerator pedal, you may not operate the pedal properly, resulting in an accident. If you use a storage area without a lid, do not place the object which may fall out while driving.**
- **If there is any object within the area where the front passenger's airbag could inflate, the object may be thrown out or the front passenger's airbag may not inflate properly. Do not place a big object on the instrument panel tray.**

⚠ CAUTION

If you use a storage area with a lid, do not drive the vehicle with the lid open. In acceleration, a sudden braking or an collision, your body may be hit by the lid or the object which falls out from the storage area.

NOTE:
If you place the keyless remote controller in any of storage areas, it may not be detected.

Using Storage Area with a Lid

Glove box

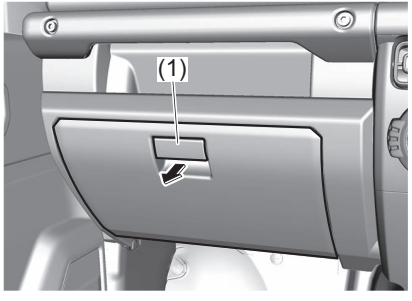

80T070090

- To open the glove box, pull the latch lever (1).
- To close it, push the lid until it is latched securely.

⚠ WARNING

- **Never drive with the glove box lid open. It could cause injury if an accident occurs.**
- **Do not leave cigarette lighters or spray cans in the glove box. If a cigarette lighter or spray can is in a place such as the glove box, it may light accidentally when luggage is loaded, causing a fire.**

Assist Grips

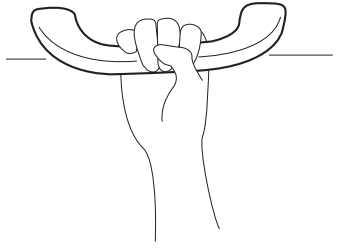

80T070110

Assist grips are provided for convenience.

NOTICE

To avoid damaging the assist grip and the molded headlining, do not hang down the assist grip.

Ride-in Assist Grip

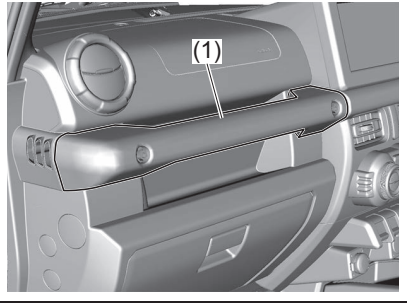

77R50220

Ride-in assist grip (1) provides solid support for the front passenger when entering or exiting the vehicle.

⚠ WARNING

- **Do not put any objects between the passenger side of the dashboard and the ride-in assist grip. When the passenger's airbag is inflated, objects may be flown toward the passenger and may cause serious injury.**
- **Front passenger should not grip the ride-in assist grip while seating. In this situation, the passenger would be too close to the inflating airbag, and may suffer severe injury.**

Footrest (if equipped)

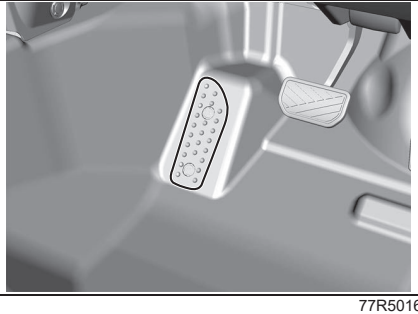

77R50160

Use the footrest as a support for your left foot only.

Door Pocket

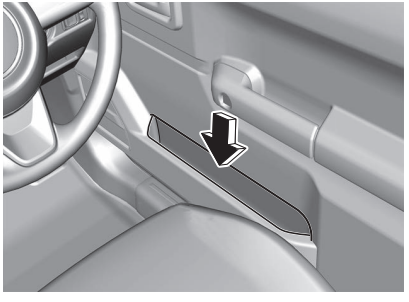

80T070130

This pocket is provided for holding light and soft things such as gloves, newspapers or magazines.

⚠ CAUTION

- **If an accident occurs, objects such as bottles, cans, etc. in the door pocket can injure the occupants. Do not put hard or breakable objects in the door pocket.**
- **If you grab and pull the door pocket, it may be broken, resulting in personal injury. When closing a door, do not grab and pull the door pocket.**

NOTE:
If you place the keyless remote controller in a door pocket, it may not be detected.

USB Socket

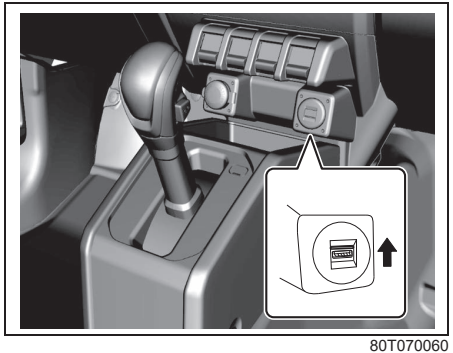

80T070060

Open the cover, and then connect your portable digital music player, etc. to this socket to enjoy music through the vehicle's audio system. Refer to the supplementary manual for details.

⚠ WARNING

If foreign material enters the USB socket, a malfunction or a short circuit may occur.
Always close the cover when the USB socket is not in use.

Seatback Pocket

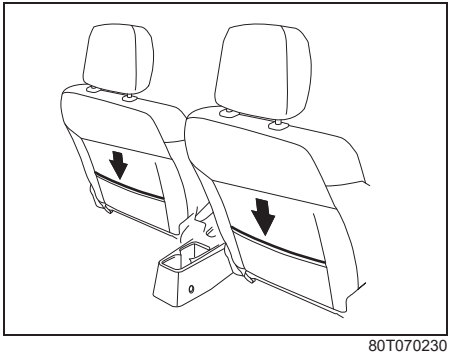

80T070230

This pocket is provided for holding light and soft things such as gloves, newspapers or magazines.

⚠ CAUTION

- **If an accident occurs, objects such as bottles, cans, etc. can injure the occupants in the rear seat. Do not put hard or breakable objects in the pocket.**
- **If you put sharp or heavy objects in the pocket, the seat may be damaged. Do not put sharp or heavy objects in the pocket.**

Frame Hooks

It is not recommended that you use the frame hooks for towing another vehicle. They were originally designed to tow your vehicle in emergency situation.
If your vehicle needs to be towed in an emergency, refer to "Towing your vehicle" in "EMERGENCY SERVICE" section.

⚠ WARNING

Observe the following instructions when using frame hooks. The frame hook or vehicle body may break and cause serious injury or damage:
- **Do not use the frame hooks for towing another vehicle.**
- **Avoid pulling the vehicle to get out of severe snowy, muddy or sandy conditions, sudden starts or erratic driving maneuvers which could cause excessive stress on the frame hook.**

In such case, we recommend that you contact a professional service.

Front

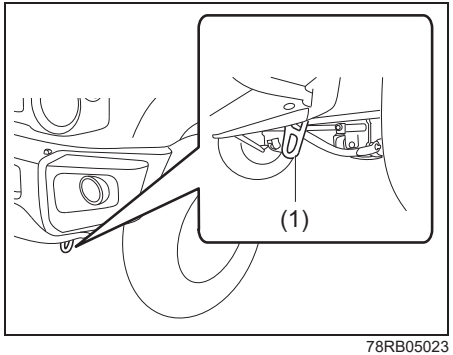

78RB05023

NOTICE

When you use the frame hook (1), avoid the driving that gives significant physical shock on hook. Such operation can damage the hook, or the vehicle body. Do not sudden accelerate.

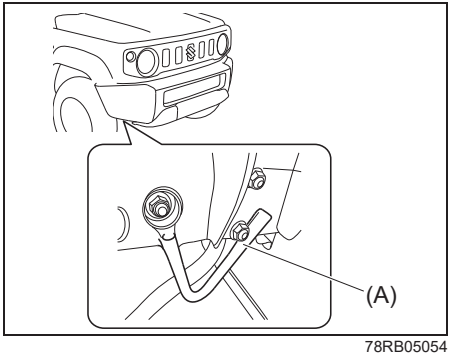

78RB05054

The hook (A) is provided for trailer or train transport purposes only.

NOTICE

Do not use the hook (A) in emergency situation. If you use this hook (A), the hook or the vehicle may be damaged.

Rear

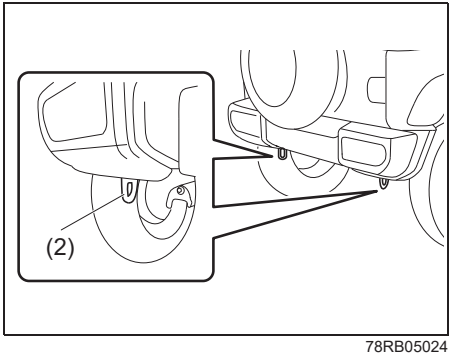

78RB05024

NOTICE

When you use the frame hook (2), avoid the driving that gives significant physical shock on hook. Such operation can damage the hook, the vehicle body or the drive system.

- **Do not sudden accelerate.**
- **Do not tow the vehicle heavier than your vehicle.**

Heating and Air Conditioning System

There are two types of heating and air conditioning systems as follows:

- Manual heating and air conditioning system
- Automatic heating and air conditioning system (climate control)

Air Outlet

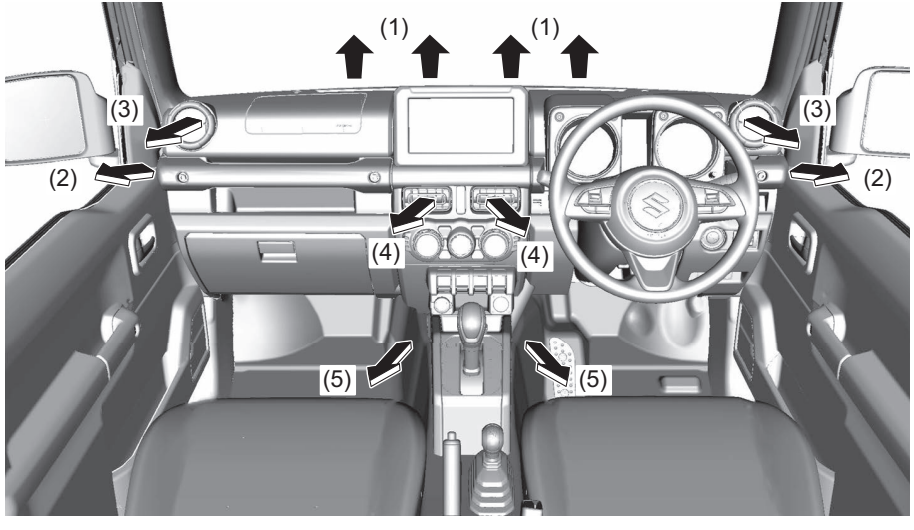

80T070150

(1) Windshield defroster outlet
(2) Side defroster outlet
(3) Side outlet
(4) Center outlet
(5) Floor outlet

Center outlet

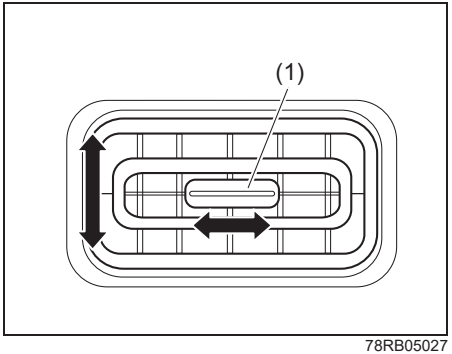

78RB05027

Move the knob (1) vertically or horizontally, to adjust the direction of airflow as desired.

Side outlet

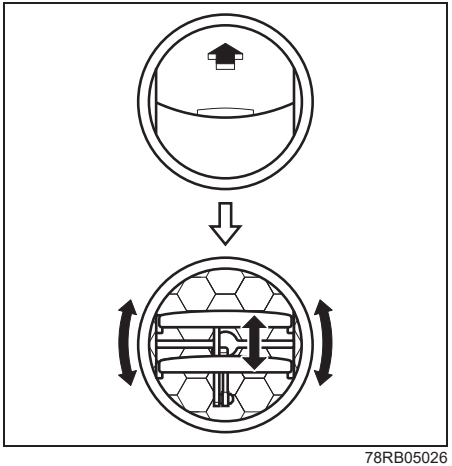

78RB05026

When open, air comes out regardless of the air flow selector position.

⚠ CAUTION

Prolonged exposure to hot air from the heater or air conditioner could result in low temperature burns. All vehicle occupants, particularly children, the elderly, those with special needs, individuals with delicate skin, and sleeping individuals, should maintain sufficient distance from the air outlets to prevent prolonged exposure to hot airflow.

Manual Heating and Air Conditioning System

Description of Controls

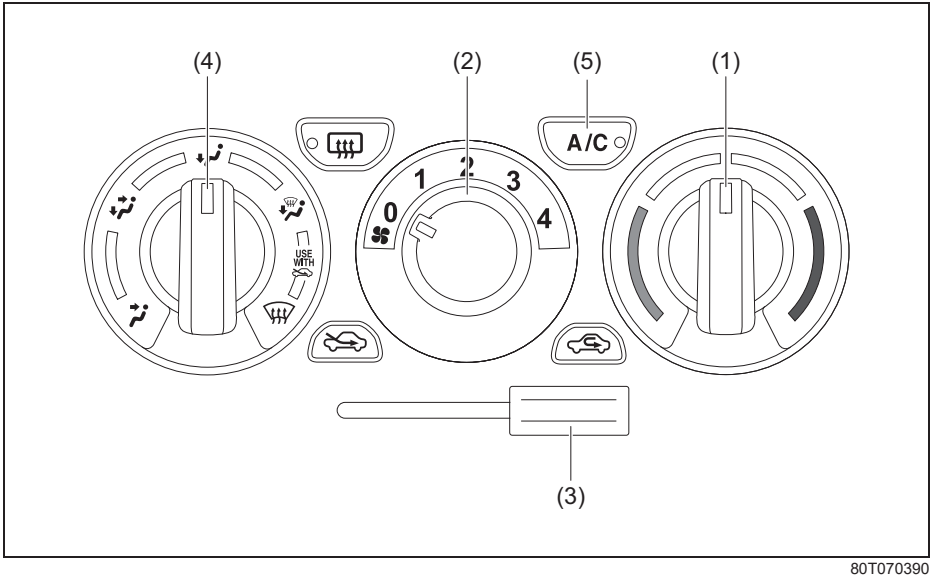

80T070390

(1) Temperature selector
(2) Blower speed selector
(3) Air intake selector
(4) Air flow selector
(5) Air conditioning switch

Temperature selector (1)
This is used to adjust the temperature.

Blower speed selector (2)
This is used to turn on the blower and to select blower speed.

Air intake selector (3)

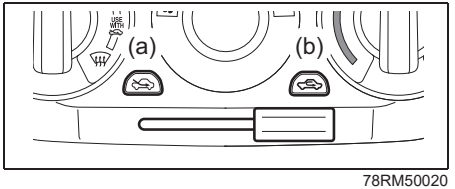

78RM50020

This selector is used to select the following modes.

FRESH AIR (a)
When this mode is selected by moving the lever to the position of (a) in the above illustration, outside air comes in.

RECIRCULATED AIR (b)
When this mode is selected by moving the lever to the position of (b) in the above illustration, inside air is recirculated. This mode is suitable when driving through dusty or polluted air such as in a tunnel, or when attempting to quickly cool down or warm up the interior or to reduce unwanted odor from entering the vehicle.

NOTE:
If you select RECIRCULATED AIR for an extended period of time, the air in the vehicle may become contaminated.
Therefore, you should occasionally select FRESH AIR.

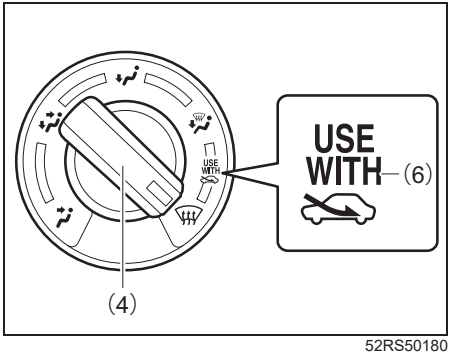

52RS50180

NOTE:
The mark of "USE WITH" (6)
To clear fog on the windshield and/or the side windows quickly, set the air flow selector (4) to "HEAT & DEFROST" or "DEFROST" and air intake selector (3) to "FRESH AIR". These positioning will clear the fogged windshield and/or the side windows faster than the "RECIRCULATED AIR".

Air flow selector (4)

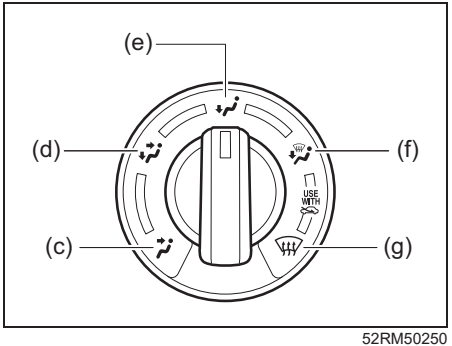

52RM50250

This is used to select one of the following functions.

VENTILATION (c)

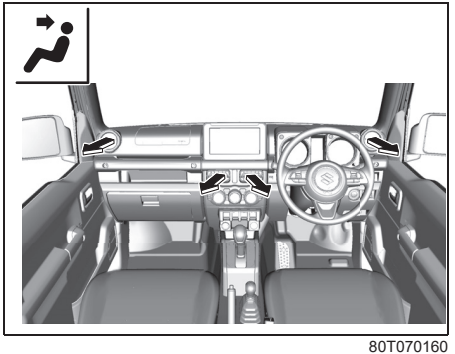

80T070160

Temperature-controlled air comes out of the center and side air outlets.

BI-LEVEL (d)

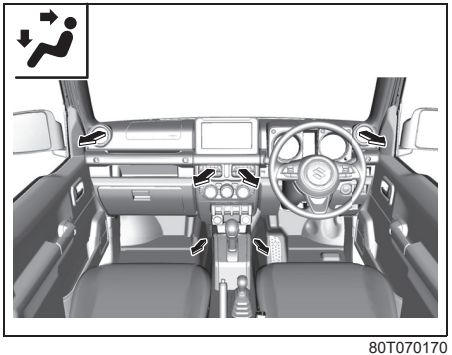

80T070170

Temperature-controlled air comes out of the floor outlets and cooler air comes out of the center and side outlets. When the temperature selector (1) is in the fully cold position or fully hot position, however, the air from the floor outlets and the air from the center and side outlets will be the same temperature.

HEAT (e)

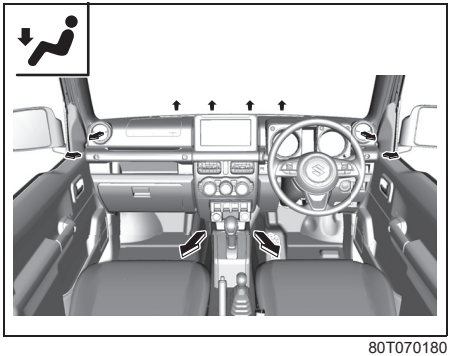

80T070180

Temperature-controlled air comes out of the floor outlets and the side outlets, also comes out of the windshield defroster outlets and also comes slightly out of the side defroster outlets.

HEAT & DEFROST (f)

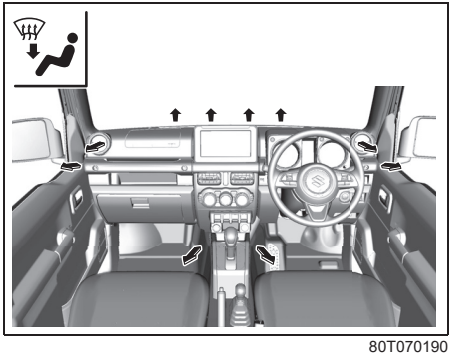

80T070190

Temperature-controlled air comes out of the floor outlets, the windshield defroster outlets, the side defroster outlets and the side outlets.

DEFROST (g)

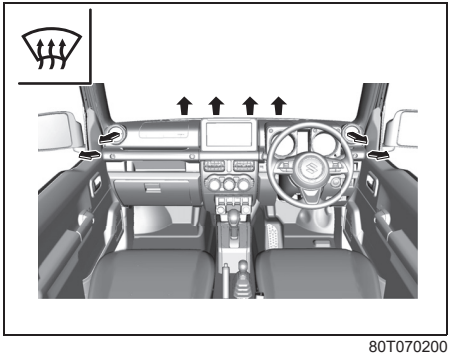

80T070200

Temperature-controlled air comes out of the windshield defroster outlets, the side defroster outlets and the side outlets.

Air conditioning switch (5)

To turn on the air conditioning system, set the blower speed selector to a position other than off and push in “A/C” switch. With this “A/C” switch operation, a indicator light will come on when the air conditioning system is working. To turn off the air conditioning system, push “A/C” switch again.

During operation of the air conditioner, you may notice slight changes in engine speed. These changes are normal, the system is designed so that the compressor turns on or off to maintain the desired temperature.

Less operation of the compressor results in better fuel economy.

System Operating Instructions

Natural ventilation

Select VENTILATION and FRESH AIR, the temperature selector to the desired temperature position, and the blower speed selector to off. Fresh air will flow through the vehicle during driving.

Forced ventilation

The base settings are the same as for natural ventilation except you set the blower speed selector to a position other than off.

Normal heating (using outside air)

Select HEAT and FRESH AIR, the temperature selector to the desired temperature position and the blower speed selector to the desired blower speed position. Setting the blower speed selector to a higher blower speed position increases heating efficiency.

Quick heating (using recirculated air)

The base settings are the same as for normal heating except you select RECIRCULATED AIR. If you use this heating method for an extended period of time, the air in the vehicle may become contaminated and the windows can become misty. Therefore, use this method only for quick heating and change to the normal heating method as soon as possible.

Head cooled/Feet warmed heating
Select BI-LEVEL and FRESH AIR, the temperature selector to the desired temperature position, and the blower speed selector to the desired blower speed position. Unless the temperature selector is in the fully cold position or fully hot position, the air that comes out of the center and side outlets will be cooler than the air that comes out of the floor outlets.

Normal cooling
Set the air flow selector to VENTILATION, the temperature selector to the desired temperature position and the blower speed selector to the desired blower speed position, and turn on “A/C” switch. Setting the blower speed selector to a higher blower speed position increases cooling efficiency.

You can switch the air intake selector to either FRESH AIR or RECIRCULATED AIR as you desire. Choosing RECIRCULATED AIR increases cooling efficiency.

Quick cooling (using recirculated air)
The base settings are the same as for normal cooling except you select RECIRCULATED AIR and the highest blower speed.

NOTE:
- *If you select RECIRCULATED AIR for an extended period of time, the air in the vehicle can become contaminated and the windows tend to get misted. Therefore, you should select FRESH AIR whenever possible.*
- *If your vehicle has been left in the sun with the windows closed, it will cool faster if you open the windows briefly while you operate the air conditioner with the air intake selector at FRESH AIR and the blower at high speed.*

Dehumidifying
Set the air flow selector to a desired air flow selector position, the temperature selector to the desired temperature position and the blower speed selector to the desired blower speed position. Also select FRESH AIR and turn on “A/C” switch.

NOTE:
Because the air conditioner dehumidifies the air, turning it on will help keep the windows clear, even when blowing heated air using DEFROST or HEAT & DEFROST functions.

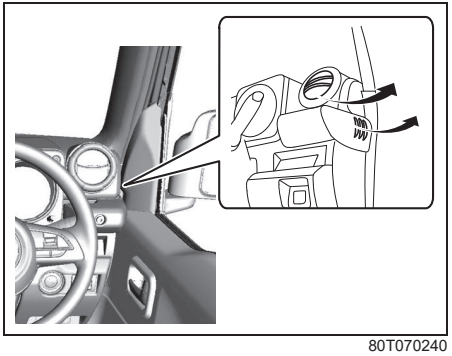

80T070240

NOTE:
If you need maximum defrosting:
- *select DEFROST and FRESH AIR,*
- *set the blower speed selector to high,*
- *adjust the temperature selector to the hot end,*
- *turn on “A/C” switch, and*
- *adjust the side outlets so the air blows on the side windows.*

Models with ENG A-STOP System
- If the cooling and heating performance can no longer perform at a sufficient level due to automatically stopping engine, press the ENG A-STOP OFF switch to deactivate the ENG A-STOP system. (The engine will automatically restart and the air conditioning performance will be restored.)
- If the windshield and/or the driver’s side/passenger side door windows are fogged during the automatic engine stop, stop the ENG A-STOP system and restart the engine. Then, turn the air flow selector (4) to change the air flow to the HEAT & DEFROST or DEFROST position to defog the windows.

Maintenance

If you do not use the air conditioner for a long period, such as during winter, it may not give the best performance when you start using it again. To help maintain optimum performance and durability of your air conditioner, it needs to be run periodically. Operate the air conditioner at least once a month for one minute with the engine idling. This circulates the refrigerant and oil and helps protect the internal components.

If your air conditioner is equipped with air filters, clean or replace them as specified in “Maintenance schedule” in “INSPECTION AND MAINTENANCE” section.

(For models with air conditioner refrigerant R-134a)

NOTE:
Your vehicle uses the air conditioning refrigerant HFC-134a, commonly called R-134a. R-134a replaced R-12 around 1993 for automotive applications. Other refrigerants are available, including recycled R-12, but only R-134a should be used in your vehicle.

NOTICE

Using the wrong refrigerant may damage your air conditioning system. Use R-134a only. Do not mix or replace the R-134a with other refrigerants.

Automatic Heating and Air Conditioning System (climate control)

Description of Controls

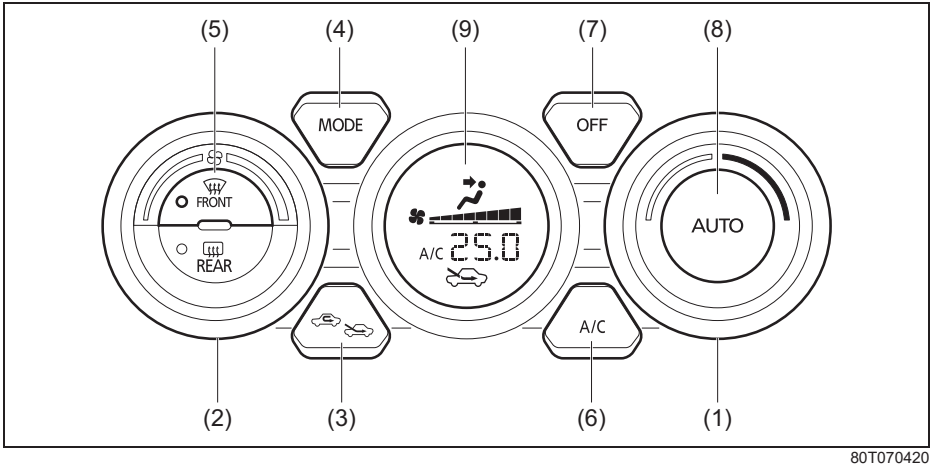

80T070420

(1) Temperature selector
(2) Blower speed selector
(3) Air intake selector
(4) Air flow selector
(5) Defrost switch
(6) Air conditioning switch
(7) “OFF” switch
(8) “AUTO” switch
(9) Display

Temperature selector (1)

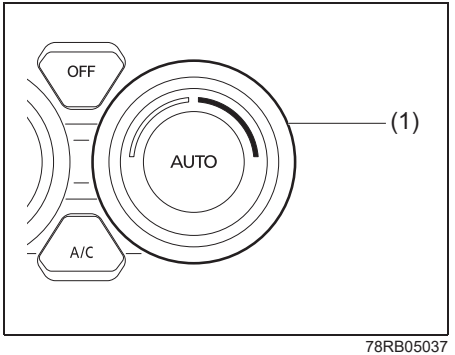

78RB05037

Turn the temperature selector (1) to adjust the temperature.

NOTE:
If you turn the temperature selector (1) until “HI” or “LO” appears on the display, the climate control system will operate at maximum heating or cooling. The temperature of the air from the outlets may change suddenly while “LO” or “HI” is displayed, but this is normal.

NOTE:
When you change the unit of temperature in the information display, the unit of temperature in the air conditioning system will be changed. Refer to “Information Display” in “INSTRUMENT CLUSTER” section for details.

Blower speed selector (2)

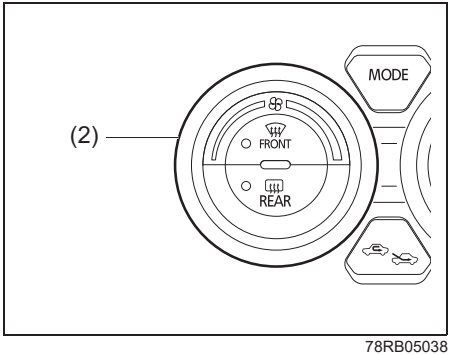

78RB05038

The blower speed selector (2) is used to turn on the blower and to select blower speed.

If “AUTO” switch (8) is pushed, the blower speed will vary automatically as the climate control system maintains the selected temperature.

Air intake selector (3)

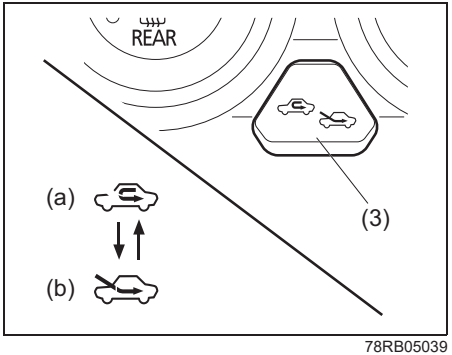

78RB05039

Push the air intake selector (3) to change between the recirculated air and fresh air mode.

If “AUTO” switch (8) is pushed, the air intake will vary automatically as the climate control system maintains the selected temperature.

NOTE:
When the recirculated air mode is selected, the automatic operation system is deactivated even if you push “AUTO” switch (8).

RECIRCULATED AIR (a)
When this mode is selected, inside air is recirculated. This mode is suitable when driving through dusty or polluted air such as a tunnel, or when attempting to quickly cool down or warm up the interior or to reduce unwanted odor from entering the vehicle.

FRESH AIR (b)
When this mode is selected, outside air is introduced.

FRESH AIR and RECIRCULATED AIR are selected alternately each time the air intake selector is pushed.

NOTE:
If you select RECIRCULATED AIR for an extended period of time, the air in the vehicle may become contaminated.
Therefore, you should occasionally select FRESH AIR.

Air flow selector (4)

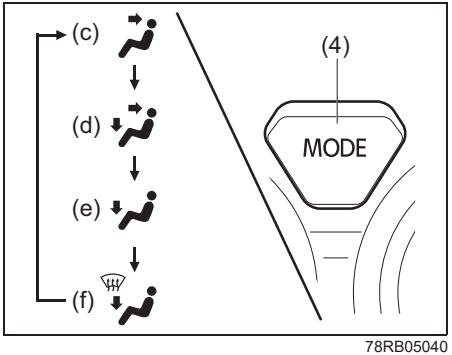

78RB05040

Push the air flow selector (4) to change among the following functions. The indication of the selected mode appears in the display.

If “AUTO” switch (8) is pushed, the air flow will vary automatically as the climate control system maintains the selected temperature.

VENTILATION (c)

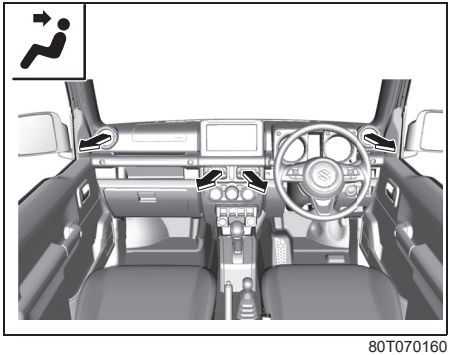

80T070160

Temperature-controlled air comes out of the center and side outlets.

BI-LEVEL (d)

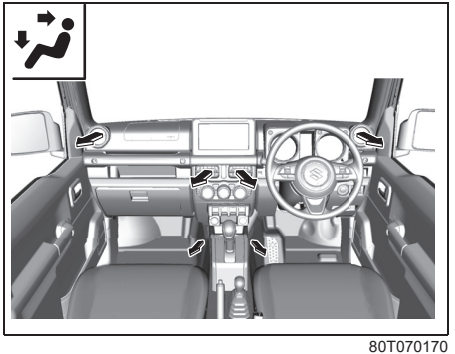

80T070170

Temperature-controlled air comes out of the floor outlets and cooler air comes out of the center and side outlets. When the temperature selector (1) is in the fully cold position or fully hot position, however, the air from the floor outlets and the air from the center and side outlets will be the same temperature.

HEAT (e)

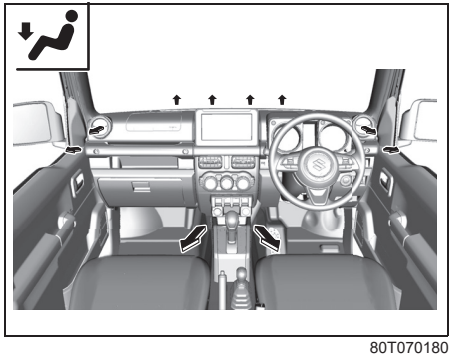

80T070180

Temperature-controlled air comes out of the floor outlets and the side outlets, a small amount of air comes out of the windshield defroster outlets and also comes slightly out of the side defroster outlets.

HEAT & DEFROST (f)

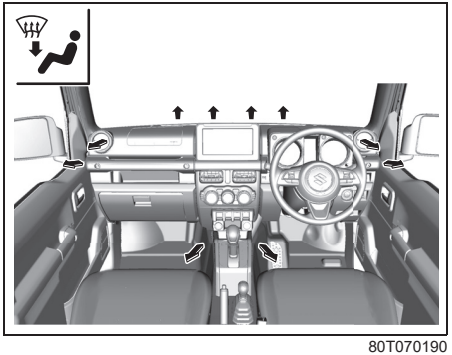

80T070190

Temperature-controlled air comes out of the floor outlets, the windshield defroster outlets, the side defroster outlets and the side outlets.

Defrost switch (5)

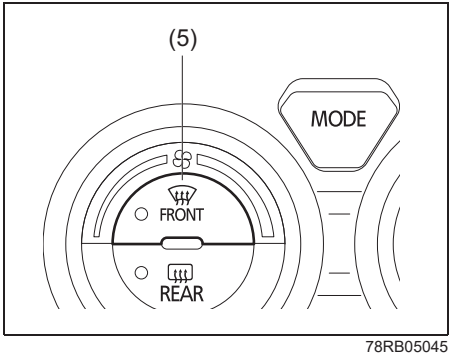

78RB05045

Push the defrost switch (5) to turn on the defroster.

DEFROST

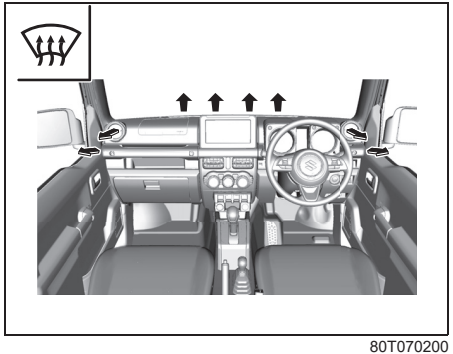

80T070200

Temperature-controlled air comes out of the windshield defroster outlets, the side defroster outlets and the side outlets.

NOTE:
When the defrost switch (5) is pushed to turn on the defroster, the air conditioning system will operate and FRESH AIR mode will be selected automatically. In very cold weather, however, the air conditioning system will not operate.

Air conditioning switch (6)

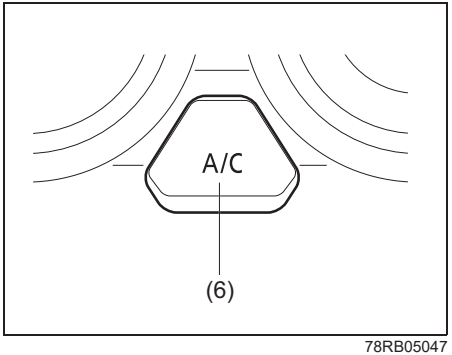

78RB05047

The air conditioning switch (6) is used to turn on and off the air conditioning system only when the blower is on. To turn on the air conditioning system, push in the switch and “A/C” will appear in the display. To turn off the air conditioning system, push in the switch again and “A/C” will go off.

System Operating Instructions

Automatic operation

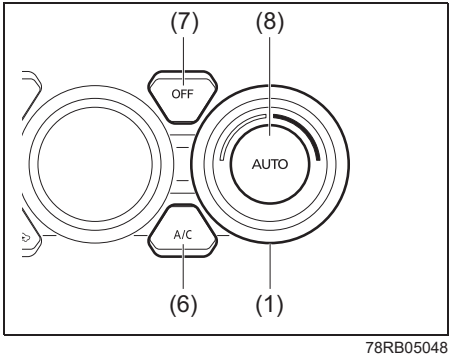

78RB05048

You can let the climate control system work automatically. To set the system for fully-automatic operation, follow the procedure below.

1) Start the engine.
2) Push “AUTO” switch (8).
3) Set the desired temperature by turning the temperature selector (1).

The blower speed, air intake and air flow are controlled automatically to maintain the set temperature. However, the air flow is not changed to DEFROST position automatically.

NOTE:
When the recirculated air mode is selected, the automatic operation system is deactivated even if you push “AUTO” switch (8).

You can use the air conditioning switch (6) to manually turn the air conditioner on or off according to your preference. When you turn the air conditioning switch off, the climate control system cannot lower the inside temperature below outside temperature.

To turn the climate control system off, push “OFF” switch (7).

NOTE:
If “AUTO” in the display blinks, there is a problem in the heating system and/or air conditioning system. You should have the system inspected by a Maruti Suzuki authorized workshop.

NOTE:
- *To find the temperature at which you are most comfortable, start with the 22°C (72°F) or 25°C (75°F) setting. (the temperature vary depending on vehicle specifications.).*
- *If you turn the temperature selector (1) until “HI” or “LO” appears on the display, the climate control system will operate at maximum heating or cooling and the blower will run at full speed.*
- *To avoid blowing cold air in cold weather or hot air in hot weather, the system will delay turning on the blower until warmed or cooled air is available.*
- *If your vehicle has been left in the sun with the windows closed, it will cool faster if you open the windows briefly.*
- *Even under the automatic operation, you can set individual selectors to the manual mode. The manually selected functions are maintained, and the other functions remain under automatic operation.*
- *If the windshield and/or the front door windows are fogged, push the defrost switch (5) to turn on the defroster, or push the air flow selector (4) to change the air flow to HEAT & DEFROST position to defog the windows.*
- *To return the blower speed selector (2), air intake selector (3), and air flow selector (4) to automatic operation, push “AUTO” switch (8).*

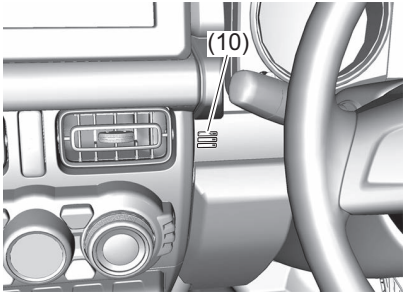

80T070210

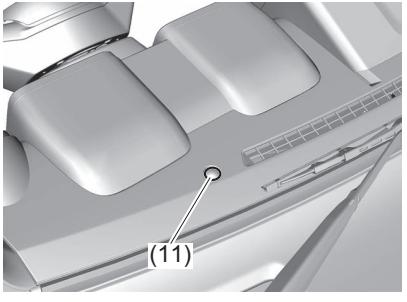

80T070220

Be careful not to cover the interior temperature sensor (10) located between the steering wheel and the climate control panel, or the solar sensor (11) located at the top of the passenger's side dashboard. These sensors are used by the automatic system to regulate temperature.

Manual operation

You can manually control the climate control system. Set the selectors to the desired positions.

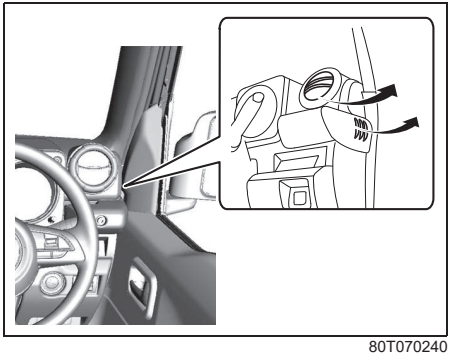

80T070240

NOTE:
If you need maximum defrosting:
- *push the defrost switch (5) to turn on the defroster (the air conditioning system will operate and FRESH AIR mode will be selected automatically),*
- *set the blower speed selector to high,*
- *adjust the temperature selector to "HI" indication on the display, and*
- *adjust the side outlets so the air blows on the side windows.*

- **Models with ENG A-STOP system**
  If the cooling and heating performance is insufficient when the engine is stopped automatically, push the ENG A-STOP OFF switch to deactivate the ENG A-STOP system. (The engine is restarted automatically, and the cooling and heating performance is restored.)
- If the windshield and/or front door windows are fogged, push the defrost switch. (When the defrost switch is pushed, the engine is restarted automatically and the defroster is turned on.)

Maintenance

If you do not use the air conditioner for a long period, such as during winter, it may not give the best performance when you start using it again. To help maintain optimum performance and durability of your air conditioner, it needs to be run periodically. Operate the air conditioner at least once a month for one minute with the engine idling. This circulates the refrigerant and oil and helps protect the internal components.

If your air conditioner is equipped with air filters, clean or replace them as specified in "Maintenance schedule" in "INSPECTION AND MAINTENANCE" section. Have this job done by a Maruti Suzuki authorized workshop as the lower glove box must be lowered for this job.

(For models with air conditioner refrigerant R-134a)

NOTE:
Your vehicle uses the air conditioning refrigerant HFC-134a, commonly called R-134a. R-134a replaced R-12 around 1993 for automotive applications. Other refrigerants are available, including recycled R-12, but only R-134a should be used in your vehicle.

NOTICE

Using the wrong refrigerant may damage your air conditioning system. Use R-134a only. Do not mix or replace the R-134a with other refrigerants.

How to Use Air Conditioning System Effectively

Parking under the blazing sun

After parking for a long time under the blazing sun, the interior temperature can become very high. Use the air conditioning system, with the windows or doors opened to ventilate the interior.

Radio Antenna

Removal and Installation

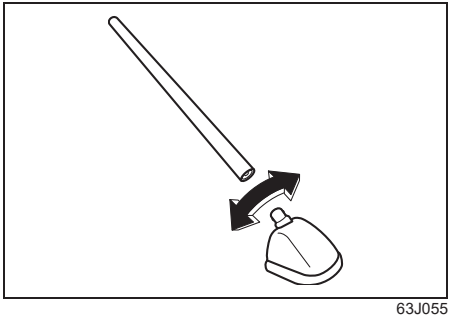

63J055

The radio antenna on the roof is removable. To remove the antenna, turn it counterclockwise. To reinstall the antenna, turn it clockwise firmly by hand.

NOTICE

To avoid damage to the radio antenna:

- **Remove the antenna when using an automatic car wash.**
- **Remove the antenna when the antenna hits anything such as a low ceiling in a parking garage or putting a car cover over your vehicle.**
- **Remove the antenna when parking your vehicle for a long time on a snowy day.**

Installation of Radio Frequency Transmitters

We recommend that you always ask an authorized Maruti Suzuki workshop about frequency band, max output power, antenna position of vehicle and specific conditions for installation and/or use before installing a radio transmitter in your vehicle. Such equipments may cause the electronic control system to malfunction if they are incorrectly installed or they are not suited for the vehicle.

Audio Function

When Using Audio System with Appropriate Volume not to Disturb Safe Driving

- When playing music or other audio, if a mobile phone is used inside or nearby the vehicle, noise may be heard from the speakers. This does not indicate a malfunction.
- Navigation and audio equipment may not function properly if they are interfered with unauthorized radio waves.
- For further information about the features of the navigation or audio equipment, refer to the instruction manuals.

⚠ WARNING

If you operate the navigation or audio equipment, you may be distracted by them, resulting in an accident.
Do not operate the navigation or audio equipment while driving.

NOTICE

While the engine is stopped, using the navigation or audio equipment for a long period of time may cause the lead-acid battery to run out.
Do not use the navigation or audio equipment for a long period of time while the engine is stopped.

NOTE:
Due to poor quality of FM/AM signal, some disturbance/noise may be heard from speakers. It is recommended to switch off the tuner system to prevent the said disturbance/noise in the speaker.

Remote Audio Controls (if equipped)

Controlling basic functions of the audio system is available using the switches on the steering wheel.
The remote audio switches are available when the ignition switch is in “ACC” or “ON” position or engine switch is in ACC or ON mode.

- For operation of an audio system or a navigation system, refer to the supplementary manual, provided along with it.
- The operating procedure may be different depending on an audio system or a navigation system.

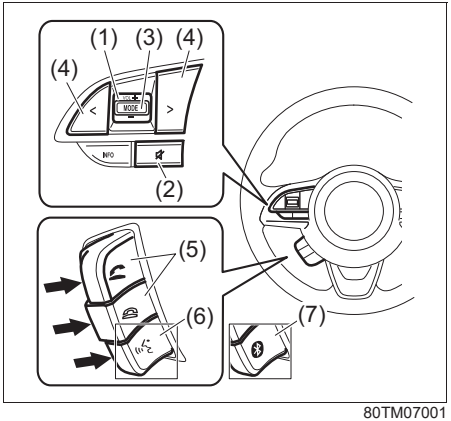

80TM07001

(1) Volume switch
(2) Mute switch
(3) “MODE” switch
(4) Select switch
(5) Hands-free switch
(6) Voice recognition switch (if equipped)
(7) Bluetooth® setup switch (if equipped)

NOTE:
To use the button (5), (6) or (7), press each button in the arrow direction as shown in the illustration.

Volume Switch (1)

You can adjust volume with this switch.
- To increase the volume, press “+” side.
- To decrease the volume, press “–” side.
- The volume will continue to increase or decrease until this switch is released.

Mute Switch (2)

To mute this sound, press the switch (2).

“MODE” Switch (3)

Every time you press this switch, the audio modes such as radio, etc. will be switched in order.
Depending on a navigation system or an audio systems, you can turn on the system by pressing this switch, even when the equipment itself is turned off.

Select Switch (4)

Every time you press this switch, you can select broadcast station or music according to your preference, along with the currently selected mode.

Hands-free Switch (5)

You can use this switch for the equipment which has the hands-free function. To use the function, you need to set up for the equipment. Refer to the supplementary manual for details.

Voice Recognition Switch (6)* (if equipped)

You can use this switch for the equipment which has the voice recognition function. To use the function, you need to set up for the equipment. Refer to the supplementary manual for details.

*: When using Apple CarPlay® or Android Auto™ on infotainment system

Apple CarPlay® may not be available in your country or region.
For details about Apple CarPlay, visit the following site:
http://www.apple.com/ios/carplay

Android Auto™ may not be available in your country or region.
For details about Android Auto, please refer to the Google support site:
http://support.google.com/androidauto

Bluetooth® Setup Switch (7) (if equipped)

To use the function, you need to set up for the equipment. Refer to the supplementary manual for details.

Bluetooth®

The Bluetooth® word mark and logo are registered trademarks and are owned by the Bluetooth SIG, Ink.

Stop using this unit and a Bluetooth® ready device whenever requested.
This unit shares the communication frequency with other private or public wireless communication equipment such as a wireless LAN and other wireless communication radios.
You should stop using this unit immediately whenever you are notified that your unit disturbs other wireless communication.

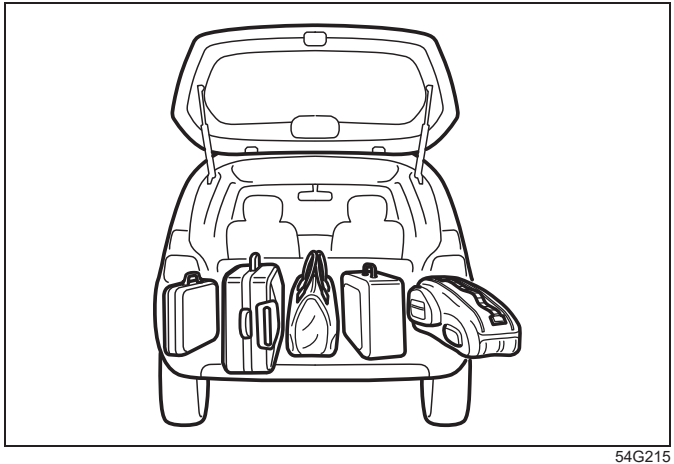

54G215

VEHICLE LOADING AND TOWING

Vehicle Loading **8-1**
Trailer Towing **8-1**

Vehicle Loading

Your vehicle was designed for specific weight capacities. The weight capacities of your vehicle are indicated by the Gross Vehicle Weight Rating (GVWR) and the Permissible maximum Axle Weight (PAW, front and rear). The GVWR and PAW (front and rear) are listed in the “SPECIFICATIONS” section.

GVWR – Maximum permissible overall weight of the fully loaded vehicle (including all the occupants, accessories and cargo plus the trailer nose weight if towing a trailer).
PAW – (Front and Rear) Maximum permissible weight on an individual axle.

Actual weight of the loaded vehicle and actual loads at the front and rear axles can only be determined by weighing the vehicle. Compare these weights to the GVWR and PAW (front and rear). If the gross vehicle weight or the load on either axle exceeds these ratings, you must remove enough weight to bring the load down to the rated capacity.

⚠ WARNING

- **Never overload your vehicle. The gross vehicle weight (sum of the weights of the vehicle, all the occupants, accessories, cargo plus trailer nose weight if towing a trailer) must never exceed the Gross Vehicle Weight Rating (GVWR). In addition, never distribute a load so that the weight on either the front or rear axle exceeds the Permissible maximum Axle Weight (PAW).**
- **Always distribute cargo evenly. To avoid personal injury or damage to your vehicle, always secure cargo to prevent it from shifting if the vehicle moves suddenly. Place heavier objects on the floor and as far forward in the cargo area as possible. Never pile cargo higher than the top of the seat backs.**

Trailer Towing

Your vehicle was originally designed to carry people and a normal amount of cargo. Do not to tow a trailer.

NOTE:
If your vehicle needs to be towed in an emergency, refer to “Towing your vehicle” in “EMERGENCY SERVICE” section.

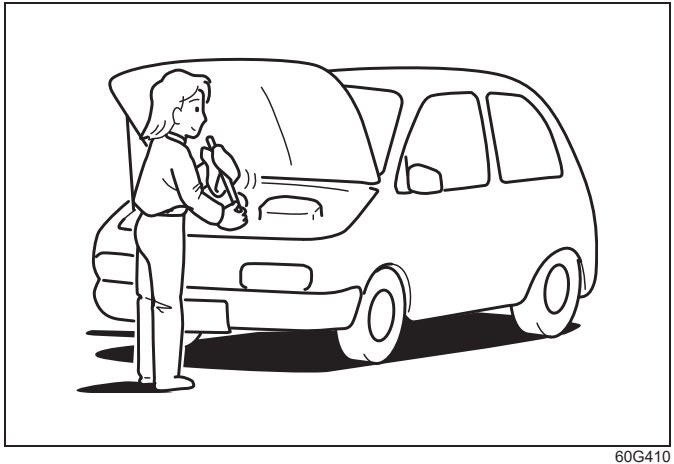

60G410

INSPECTION AND MAINTENANCE

Maintenance Schedule 9-2
Periodic Maintenance Schedule 9-2
Drive Belt 9-7
Engine Oil and Filter 9-7
Engine Coolant 9-11
Air Cleaner 9-13
Spark Plugs 9-13
Automatic Transmission Fluid 9-14
Gear Oil 9-16
Clutch 9-18
Brakes 9-19
Steering Wheel 9-22
Tyres 9-23
Battery 9-25
Fuses 9-28
Headlight Aiming 9-31
Bulb Replacement 9-32
Headlight Washer Fluid 9-41
Wiper Blades 9-41
Windshield Washer Fluid 9-45
Air Conditioning System 9-46
Preparation Before Winter Season 9-48

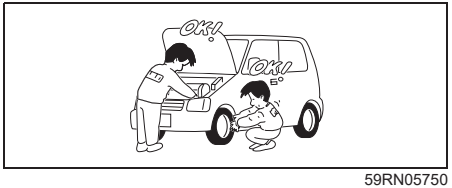

59RN05750

⚠ WARNING

Take extreme care when working on your vehicle to prevent accidental injury. Carefully observe the following precautions:

- **To prevent damage or unintended activation of the airbag system or seat belt pretensioner system, check that the lead-acid battery is disconnected and the ignition switch has been in "LOCK" position or the ignition mode has been in LOCK (OFF) position for at least 90 seconds before performing any electrical service work on your Maruti Suzuki vehicle. Do not touch airbag system components, seat belt pretensioner system components or wires.**
  The wires are wrapped with yellow tape or yellow tubing, and the couplers are yellow for easy identification.
- **Do not leave the engine running in garages or other confined areas.**

(Continued)

⚠ WARNING

(Continued)

- **When the engine is running, keep hands, clothing, tools, and other objects away from the fan and drive belt. Even though the fan may not be moving, it can automatically turn on without warning.**
- **When it is necessary to perform service work with the engine running, check that the parking brake is set fully and the transmission is in Neutral (for manual transmission vehicles) or Park (for automatic transmission vehicles)**
- **Do not touch ignition wires or other ignition system parts when starting the engine or when the engine is running, or you could receive an electric shock.**
- **Be careful not to touch a hot engine, exhaust manifold and pipes, muffler, radiator and water hoses.**
- **Do not allow smoking, sparks, or flames around fuel or the battery. Flammable fumes are present.**

(Continued)

⚠ WARNING

(Continued)

- **Do not get under your vehicle if it is supported only with the portable jack provided in your vehicle.**
- **Be careful not to cause accidental short circuits between the positive and negative battery terminals.**
- **Keep used oil, coolant, and other fluids away from children and pets. Dispose of used fluids properly; never pour them on the ground, into sewers, etc.**

Maintenance Schedule

The following table shows the times when you should perform regular maintenance on your vehicle. This table shows in kilometers and months when you should perform inspections, adjustments, lubrication and other services.

⚠ WARNING

MARUTI SUZUKI recommends that maintenance on your Maruti Suzuki vehicle should be performed by a Maruti Suzuki authorized workshop.

Periodic Maintenance Schedule

"C": Clean
"R": Replace or Change
"I": Inspect, clean, adjust, lubricate or replace as necessary
"L": Lubricate
"T": Tighten to Specified Torque
"O": Rotate

NOTE:
- *This table includes services as scheduled up to 80,000 km mileage. Beyond 80,000 km, carry out the same services at the same intervals respectively.*
- *For free inspection the cost of materials and consumables to be borne by customer.*

Interval: This interval should be judged by odometer reading or months, whichever comes first.			FREE INSPECTION			PERIODIC MAINTENANCE AT COST						
		km (x1000)	1	5	10	20	30	40	50	60	70	80
		months	1	6	12	24	36	48	60	72	84	96
ENGINE												
1-1.	Water pump drive belt (Wear)		–	–	I	I	I	I	I	I	I	R
1-2.	Engine Coolant (Level, Leakage)	First time:	Replace at 1,00,000 km or 60 months whichever comes first									
		Second time and after:	Replace at 40,000 km or 24 months whichever comes first									
1-3.	Engine oil, engine oil filter and drain plug gasket (Level, Leakage)		I	I	R	R	R	R	R	R	R	R
1-4.	Cooling system hoses and connections (Leakage and Damage)		I	I	I	I	I	I	I	I	I	I
1-5.	Engine Mounting & manifold fixing (Loose, Damage)		–	–	I	–	I	–	I	–	I	–
1-6.	Valve Clearance		–	–	–	–	I	–	–	I	–	–
1-7.	Exhaust System (Noise, Leakage etc.)		–	I	–	I	–	I	–	I	–	I
1-8.	Positive Crank Case Ventilation System (Hoses, Connections and Valve)		–	I	–	I	–	I	–	I	–	I
IGNITION												
2-1.	Ignition wire (Damage, Deterioration)		–	–	–	I	–	I	–	I	–	I
2-2.	Spark Plug (Nickel Plug)		–	–	–	–	–	R	–	–	–	R
FUEL												
3-1.	Air cleaner filter element	Paved-road	Clean after every 5,000 km Replace after every 40,000 km									
		Dusty Condition	Clean after every 2,500 km or as required. Replace after every 40,000 km									
			Replace more frequently if dust condition is severe.									
3-2.	Fuel tank cap, fuel lines and connections (Leakage and Damage)		–	I	–	–	–	I	–	–	–	I
3-3.	Fuel Filter		Replace after every 1,00,000 km or 120 months whichever comes first									
3-4.	Fuel Tank		–	–	–	–	–	I	–	–	–	I
CLUTCH AND TRANSMISSION												
4-1.	Clutch fluid (Level, Leakage)		I	I	I	I	I	I	I	I	I	I
			Replace after every 40,000 km or 24 months whichever comes first									
4-2.	Clutch slipping (Dragging or Excess Damage)		I	I	I	I	I	I	I	I	I	I

Interval: This interval should be judged by odometer reading or months, whichever comes first.			FREE INSPECTION			PERIODIC MAINTENANCE AT COST						
		km (xl000)	1	5	10	20	30	40	50	60	70	80
		months	1	6	12	24	36	48	60	72	84	96
4-3.	Manual Transmission Oil (Level, Leakage)		I	I	I	I	I	I	I	I	I	I
4-4.	Automatic Transmission Fluid (Level, Leakage)		Replace at 1,65,000 km or 11 years whichever comes first									
4-5.	Transfer Oil (4WD) (Level, Leakage)		I	I	I	I	I	I	I	I	I	I
			Replace after every 1,50,000 km or 120 months whichever comes first									
4-6.	Rear Differential Oil (4WD) (Level, Leakage)		I	I	I	I	I	I	I	I	I	I
			Replace after every 1,50,000 km or 120 months whichever comes first									
4-7.	Automatic Transmission cooling system hoses and pipe (Leakage and Damage)		I	I	I	I	I	I	I	I	I	I
4-8.	Gear shifter (Operation)		I	I	I	I	I	I	I	I	I	I
DRIVE SHAFT												
5-1.	Drive shaft noise		I	I	I	I	I	I	I	I	I	I
5-2.	Drive shaft boot / Propeller shafts (boot damage)		–	I	I	I	I	I	I	I	I	I
BRAKE												
6-1.	Brake Fluid (Level, Leakage)		I	I	I	I	I	I	I	I	I	I
			Replace after every 40,000 km or 24 months whichever comes first									
6-2.	Brake pedal (Pedal - floor carpet clearance)		I	I	I	I	I	I	I	I	I	I
6-3.	Parking brake lever and cable (Play, Damage)		I	I	I	I	I	I	I	I	I	I
6-4.	Brake disc and pad (Wear)		–	I	I	I	I	I	I	I	I	I
6-5.	Brake drum and shoes (Wear)		–	–	I	I	I	I	I	I	I	I
6-6.	Brake hoses and pipes (Fluid leakage, Damage)		I	I	I	I	I	I	I	I	I	I
6-7.	Master cylinder, wheel cylinder and caliper piston (Fluid leakage, Boot/Seal damage)		I	I	I	I	I	I	I	I	I	I
WHEEL												
7-1.	Tires (Air pressure, Abnormal wear, Crack and Rotation)		I	I&O	I&O	I&O	I&O	I&O	I&O	I&O	I&O	I&O
7-2.	Wheels (Damage)		I	I	I	I	I	I	I	I	I	I
7-3.	Front/Rear wheel bearing (Loose, Damage)		I	I	I	I	I	I	I	I	I	I

Interval: This interval should be judged by odometer reading or months, whichever comes first.			FREE INSPECTION			PERIODIC MAINTENANCE AT COST						
		km (xl000)	1	5	10	20	30	40	50	60	70	80
		months	1	6	12	24	36	48	60	72	84	96
FRONT / REAR SUSPENSION												
8-1.	Suspension strut (Oil leakage, Damage)		I	I	I	I	I	I	I	I	I	I
8-2.	Suspension arms / Knuckle support and Torsion rods (Loose, Damage)		–	I	I	I	I	I	I	I	I	I
8-3.	Rear spring (Damage)		I	I	I	I	I	I	I	I	I	I
8-4.	Shock absorbers (Oil leakage, Damage)		I	I	I	I	I	I	I	I	I	I
8-5.	All bolts and nuts (Loose)		–	T	T	T	T	T	T	T	T	T
STEERING												
9-1.	Steering wheel (Play, Loose)		I	I	I	I	I	I	I	I	I	I
9-2.	All rods and arms (Loose, Damage, Wear)		I	I	I	I	I	I	I	I	I	I
9-3.	Tilt Steering (Operation)		I	I	I	I	I	I	I	I	I	I
ELECTRICAL												
10-1.	Battery - electrolyte (Level, leakage) and voltage		I	I	I	I	I	I	I	I	I	I
10-2.	Wiring harness connection (Loose, Damage)		–	I	I	I	I	I	I	I	I	I
10-3.	Lighting system (Operation, Stains, Damage)		I	I	I	I	I	I	I	I	I	I
10-4.	Wiper (Operation)		I	I	I	I	I	I	I	I	I	I
10-5.	Horn (Operation)		I	I	I	I	I	I	I	I	I	I
10-6.	AUX, USB and accessory socket (if equipped) (Operation)		–	I	I	I	I	I	I	I	I	I

⚠ WARNING

The shock absorbers are filled with high pressure gas. Never attempt to disassemble them or throw them into a fire. Avoid storing them near a heater or heating device. When scrapping the absorber, the gas must be released from the absorber safely. Ask your Maruti Suzuki authorized workshop for assistance.

Interval: This interval should be judged by odometer reading or months, whichever comes first.			FREE INSPECTION			PERIODIC MAINTENANCE AT COST						
		km (xl000)	1	5	10	20	30	40	50	60	70	80
		months	1	6	12	24	36	48	60	72	84	96
BODY												
11-1.	All chassis bolts and nuts (Tighten)		–	T	T	T	T	T	T	T	T	T
11-2.	All latches, hinges and locks (Function)		I	I&L	I&L	I&L	I&L	I&L	I&L	I&L	I&L	I&L
ROAD TEST												
12-1.	Operation of Brakes, gear shifting and speedometer		I	I	I	I	I	I	I	I	I	I
12-2.	Body and chassis noise		I	I	I	I	I	I	I	I	I	I
AIR CONDITIONER												
13-1.	Check belt tension		I	I	I	I	I	I	I	I	I	I
13-2.	Tighten compressor mounting bolt		–	T	T	T	T	T	T	T	T	T
13-3.	All hose joint (Check, Tighten)		I	I	I	I	I	I	I	I	I	I
13-4.	Check functioning of Recirculating flap		I	I	I	I	I	I	I	I	I	I
13-5.	Clean condenser with low pressure water		–	C	C	C	C	C	C	C	C	C
13-6.	Check belt for frayed edges		I	I	I	I	I	I	I	I	I	I
13-7.	Check all mounting bolts		I	I	I	I	I	I	I	I	I	I
13-8.	Air conditioner filter element		I	I	I	I	R	I	I	R	I	I

Drive Belt

⚠ WARNING

When the engine is running, keep hands, hair, clothing, tools, etc. away from the moving fan and drive belts.

Check that the drive belt tension is correct while the engine is stopped. If the belt is too loose, insufficient battery charging, engine overheating, poor air conditioning, or excessive belt wear can result. When you push the belt with your thumb midpoint between the pulleys, there should be a deflection according to the following chart.

The belts should also be examined to ensure that they are not damaged.

If you need to replace or adjust the belt have it done by a Maruti Suzuki authorized workshop.

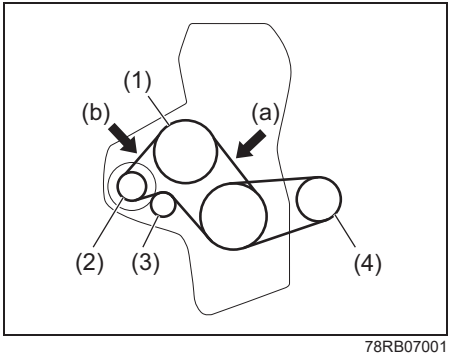

78RB07001

(1) Water pump (2) Generator

(3) Idler pulley

(4) Air conditioner compressor

Drive belt deflection (100 N)

(a) New:
4.8 - 5.9 mm
Readjustment:
6.2 - 7.1 mm

(b) New:
3.2 - 4.1 mm
Readjustment:
4.4 - 5.0 mm

Engine Oil and Filter

Specified Oil

For India

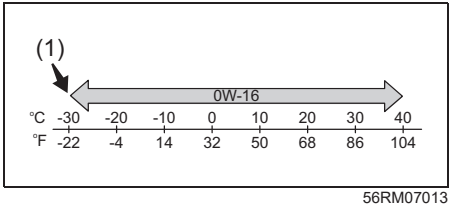

56RM07013

(1) Preferred

For India, check that the engine oil you use comes under the quality classification of API SN. Select the appropriate oil viscosity according to the above chart.
For India, be sure that the engine oil you use comes under the quality classification as listed below.

- API SN, SP
- ILSAC GF-6

SAE 0W-16 (1) is the best choice for good fuel economy and good startability in cold weather.

Except for India

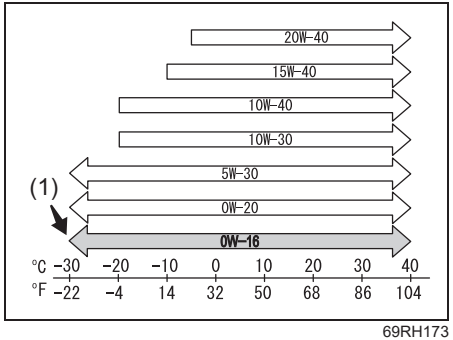

69RH173

(1) Preferred

Except for India, be sure that the engine oil you use comes under the quality classification as listed below.
- API SL, SM, SN, SP
- ILSAC GF-6

SAE 0W-16 (1) is the best choice for good fuel economy and good startability in cold weather.

NOTE:
- *We recommend that you use Maruti Suzuki genuine oil. To purchase it, see a Maruti Suzuki authorized workshop.*
- *The replacement timing varies with the type of engine oil that you choose. Refer to "Maintenance schedule" in this section for corresponding maintenance schedule.*

Oil Level Check

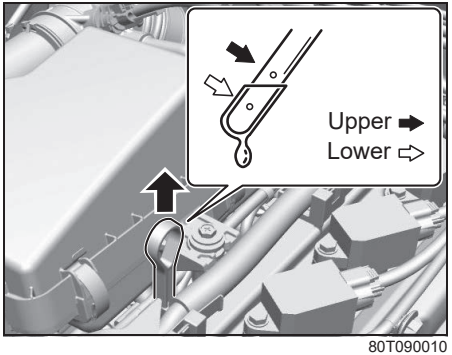

80T090010

It is important to keep the engine oil at the correct level for proper lubrication of your vehicle's engine. Check the oil level with the vehicle on a level surface. The oil level indication may be inaccurate if the vehicle is on a slope. The oil level should be checked either before starting the engine or at least 5 minutes after stopping the engine.

Pull out the oil dipstick, wipe the oil off with a clean cloth, insert the dipstick all the way into the engine, and then remove it again. The oil on the stick should be between the upper and lower limits shown on the stick. If the oil level indication is near the lower limit, add enough oil to raise the level to the upper limit.

NOTICE
Failure to check the oil level regularly could lead to serious engine trouble due to insufficient oil.

Refilling

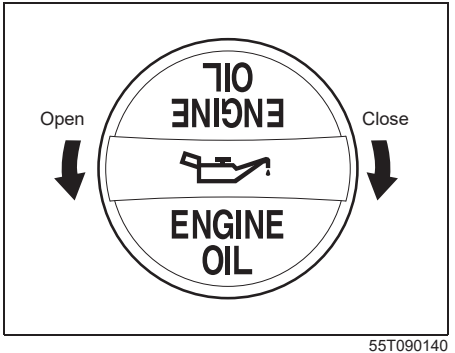

55T090140

Remove the oil filler cap and pour oil slowly through the filler hole to bring the oil level to the upper limit on the dipstick. Be careful not to overfill the oil. Too much oil is almost as bad as too little oil. After refilling, start the engine and allow it to idle for about a minute. Stop the engine, wait about 5 minutes and check the oil level again.

Changing Engine Oil and Filter

Drain the engine oil while the engine is still warm.

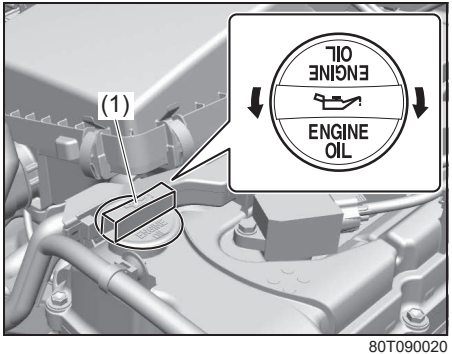

80T090020

1) Remove the oil filler cap (1).

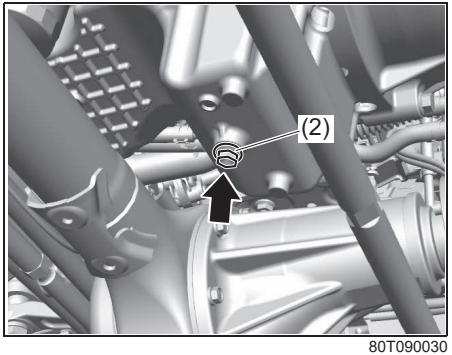

80T090030

2) Place a drain pan under the drain plug.
3) Using a wrench, remove the drain plug (2) and drain the engine oil.

⚠ CAUTION

The engine oil temperature may be high enough to burn your fingers when the drain plug is loosened. Wait until the drain plug is cool enough to touch with your bare hands.

⚠ WARNING

Engine oil can be hazardous. Children and pets may be harmed by swallowing new or used oil. Keep new and used oil and used oil filters away from children and pets.
Repeated, prolonged contact with used engine oil may cause skin cancer.
Brief contact with used oil may irritate skin.
To minimize your exposure to used oil, wear a long-sleeve shirt and moisture-proof gloves (such as dishwashing gloves) when changing oil. If oil contacts your skin, wash thoroughly with soap and water.
Launder any clothing or rags if it is with oil.
Recycle or properly dispose of used oil and oil filters.

4) Reinstall the drain plug with new gasket. Tighten the plug with a wrench to the specified torque.

   Tightening torque for drain plug: 35 Nm (3.6 kg-m)

NOTE:
Ask your Maruti Suzuki authorized workshop for changing engine oil and filter if you have difficulties.

Oil Filter Replacement

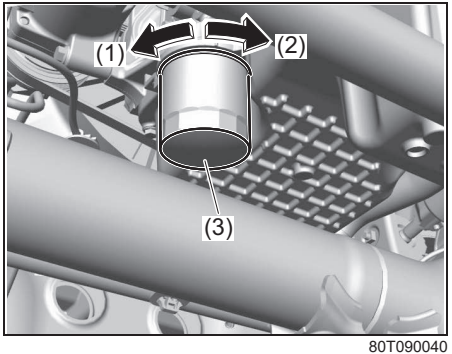

80T090040

(1) Loosen (counterclockwise)
(2) Tighten (clockwise)

1) Using an oil filter wrench, turn the oil filter (3) counterclockwise and remove it.
2) Using a clean rag, wipe off the mounting surface on the engine where the new filter will be seated.
3) Smear a small amount of engine oil around the rubber gasket of the new oil filter.
4) Screw the new filter by hand until the filter gasket contacts the mounting surface.

Tightening (viewed from filter top)

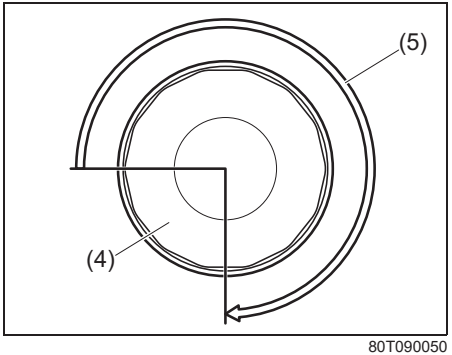

80T090050

(4) Oil filter
(5) 3/4 turn

NOTICE
To tighten the oil filter properly, it is important to accurately identify the position at which the filter gasket first contacts the mounting surface.

5) Turn the oil filter clockwise as specified below from the point of contact with the mounting surface (or to the specified torque) using an oil filter wrench.

   Tightening torque for oil filter:
   3/4 turn or
   14 Nm (1.4 kg-m)

NOTICE
To prevent oil leakage, check that the oil filter is tight, but do not over-tighten it.

Refilling with Oil and Oil Leakage Check

1) Pour oil through the filler hole and install the filler cap.
   For the approximate capacity of the oil, refer to “Recommended fuel / lubricants and capacities (approx.)” in “SPECIFICATIONS” section.
2) Start the engine and carefully check the oil filter and the drain plug for leakage. Run the engine at various speeds for at least 5 minutes.
3) Stop the engine and wait about 5 minutes. Check the oil level again and add oil if necessary. Check for leakage again.

NOTICE

- **When replacing the oil filter, it is recommended that you use a genuine Maruti Suzuki replacement filter. If you use an aftermarket filter, check that it is of equivalent quality and follow the manufacturer's instructions.**
- **Oil leakage from the periphery of the oil filter or drain plug indicate incorrect installation or gasket damage. If you find any leakage or are not sure that the filter has been properly tightened, have your vehicle inspected by a Maruti Suzuki authorized workshop.**

Engine Coolant

Selection of Coolant

To maintain optimum performance and durability of your engine, use Maruti Suzuki genuine coolant or equivalent.

This type of coolant is the best for cooling system for the following reasons:

- The coolant helps maintain proper engine temperature.
- It gives proper protection against freezing and boiling.
- It gives proper protection against corrosion and rust.

Failure to use the proper coolant can damage your cooling system. Your Maruti Suzuki authorized workshop can help you select the proper coolant.

NOTICE

SUZUKI LLC: Super (Blue) coolant; This coolant is already diluted to the proper percentage. Do not dilute with distilled water additionally. Doing so may result in the possibility of freezing and/or overheating coolant.

NOTICE

To avoid damaging your cooling system:

- **Always use a high quality ethylene glycol base non-silicate type coolant diluted with distilled water or deionized water at the correct mixture concentration.**
- **Check that the proper mix is 50/50 coolant to distilled water or deionized water and in no case higher than 50/50. Concentrations greater than 50/50 coolant to distilled water or deionized water will cause overheating conditions.**
- **Do not use straight coolant nor plain water.**
- **Do not add extra inhibitors or additives. They may not be compatible with your cooling system.**
- **Do not mix different types of base coolants. Doing so may result in accelerated seal wear and/or the possibility of severe overheating and extensive engine/automatic transmission damage.**

Coolant Level Check

Check the coolant level at the reservoir tank, not at the radiator. With the engine cool, the coolant level should be between "FULL" and "LOW" marks.

Adding Coolant

⚠ WARNING

Swallowing engine coolant can cause severe injury or death. Inhaling coolant mist or vapors or getting coolant in your eyes could result in severe injury.

- **Do not drink antifreeze or coolant solution. If swallowed, do not induce vomiting. Immediately contact a poison control center or a physician.**
- **Avoid inhaling coolant mist or hot vapors. If inhaled, remove to a fresh air area.**
- **If coolant gets in the eyes, flush with water and seek medical attention.**
- **Wash thoroughly after handling coolant.**
- **Keep engine coolant out of the reach of children and pets.**

NOTICE

SUZUKI LLC: Super (Blue) coolant; This coolant is already diluted to the proper percentage. Do not dilute with distilled water additionally. Doing so may result in the possibility of freezing and/or overheating coolant.

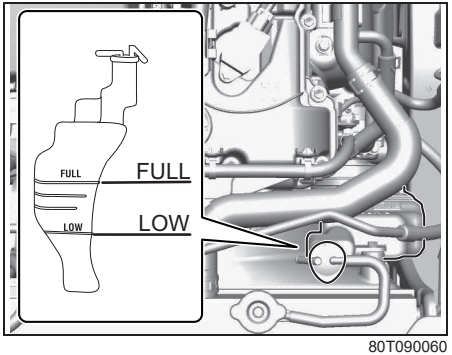

80T090060

If the coolant level is below “LOW” mark, coolant should be added. While the engine is cool, remove the reservoir tank cap and add coolant until the reservoir tank level reaches “FULL” mark. Never fill the reservoir tank above “FULL” mark.

NOTICE

When putting the cap on the reservoir tank, line up the mark on the cap and the mark on the tank. Failure to follow this can result in coolant leakage.

Coolant Replacement

Since special procedures are required, ask your Maruti Suzuki authorized workshop for this job.

Air Cleaner

If the air cleaner is clogged with dust, there will be greater intake resistance, resulting in decreased power output and increased fuel consumption.

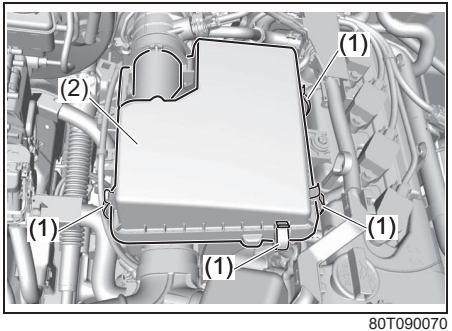

80T090070

1) Unclamp the side clamps (1).
2) Hold up the air cleaner upper case (2).
3) Remove the element from the air cleaner case. If it appears to be dirty, clean or replace it with a new one.
4) Reinstall the air cleaner case securely.

Spark Plugs

Spark Plug Replacement and Inspection

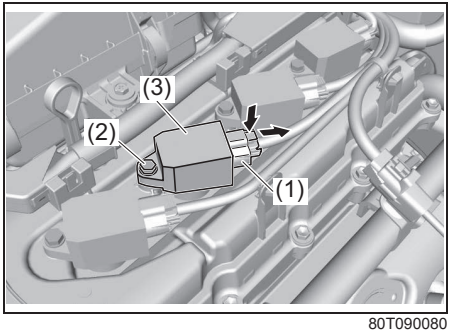

80T090080

To access the spark plug:
1) Disconnect the coupler (1) while pushing the release lever.
2) Remove the bolt (2).
3) Pull out the ignition coil (3) straight.

NOTE:
During installation, check that the wires, couplers, sealing rubber of air cleaner chassis and washers, are correctly returned in place.

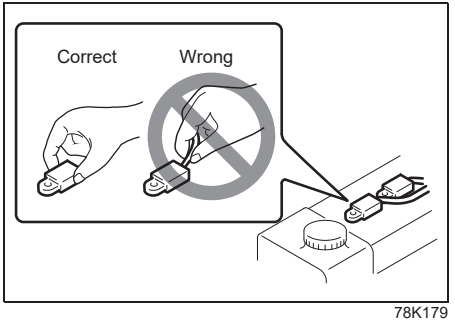

78K179

NOTICE

- **When pulling out the ignition coils, do not pull on the cable. Pulling on the cable can damage it.**
- **When servicing the iridium/platinum spark plugs (slender center electrode type plugs), do not touch the center electrode, as it is easy to be damaged.**

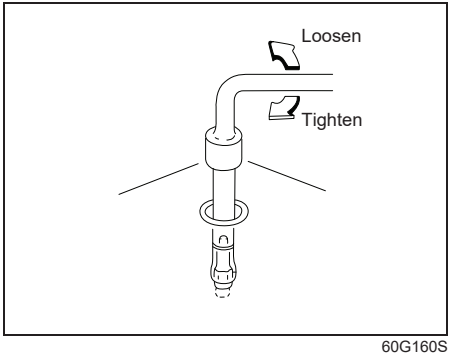

60G160S

NOTICE

- **When installing the spark plugs, screw them in with your fingers to avoid stripping the threads. Tighten the spark plugs with a torque wrench to 17.5 Nm (1.7 kg-m). Do not allow contaminants to enter the engine through the spark plug holes when the plugs are removed.**
- **Never use spark plugs with the wrong thread size.**

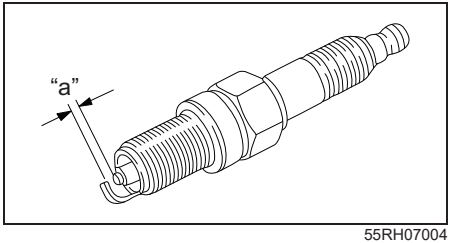

55RH07004

Spark plug gap "a":

KR6A-10
0.95-1.05mm

NOTICE

When replacing spark plugs, you should use the brand and type specified for your vehicle. For the specified plugs, refer to "SPECIFICATIONS" section in the end of this book. If you wish to use a brand of spark plug other than the specified plugs, consult with a Maruti Suzuki authorized workshop.

Automatic Transmission Fluid

Specified Fluid

Use an automatic transmission fluid SUZUKI ATF3317 or Mobil ATF3309.

Fluid Level Check

When checking the automatic transmission fluid level, perform it when the fluid temperature is 70 to 80 °C (158 to 176°F).
If the fluid temperature can not be measured, ask your Maruti Suzuki authorized workshop for this job.

NOTICE

Driving with too much or too little fluid can damage the transmission.

You must check the fluid level with the automatic transmission fluid at normal operating temperature.

To check the fluid level:
1) To warm up the transmission fluid, drive the vehicle or idle the engine until the engine coolant temperature light (blue color) goes off.
2) Then drive for ten more minutes.

NOTICE

Be sure to use the specified automatic transmission fluid. Using automatic transmission fluid other than SUZUKI ATF3317 or Mobil ATF3309 may damage the automatic transmission of your vehicle.

NOTE:
Do not check the fluid level if you have just driven the vehicle for a long time at high speed, or if you have driven in city traffic in hot weather. Wait until the fluid cools down (about 30 minutes), or the fluid level indication will not be correct.

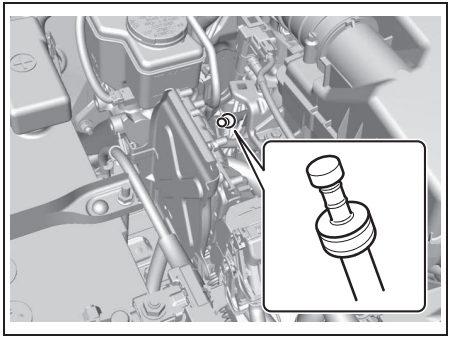

80T090090

3) Park your vehicle on level ground.
4) Apply the parking brake and then start the engine in “P” (Park). Let it idle for two minutes and keep it running during the fluid level check.
5) With your foot on the brake pedal, move the gearshift lever through each gear, pausing for about three seconds in each range. Then move it back to the “P” (Park) position.

⚠ WARNING

Be sure to depress the brake pedal when moving the gearshift lever, or the vehicle can move suddenly.

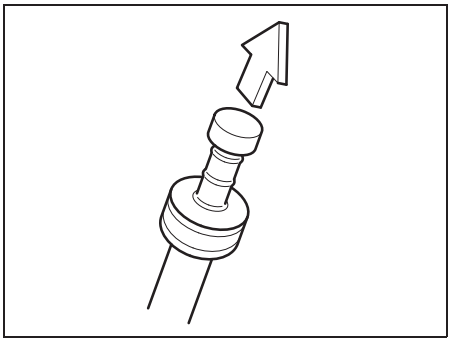

81PN159

6) Remove the dipstick, clean it and push it back in until the cap seats. Then pull out the dipstick.
7) Check both sides of the dipstick, and read the lowest level. The fluid level should be between the two marks on the dipstick.

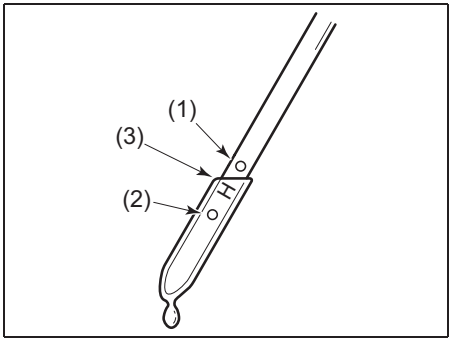

78RB07055

(1) FULL
(2) LOW
(3) The lowest point = Fluid level

8) Add just enough specified fluid through the dipstick hole to fill the transmission oil to the proper level.

NOTICE

After checking or adding oil, be sure to insert the dipstick securely.

Changing Oil

Since special procedures, materials, and tools are required to change the automatic transmission oil, ask your Maruti Suzuki authorized workshop for this job.

Gear Oil

Manual Transmission Oil / transfer Oil / Front/rear Differential Oil

When adding gear oil, use gear oil with the appropriate viscosity and grade as shown in the chart below.

We highly recommend you use “MARUTI GENUINE GEAR OIL 75W” for manual transmission oil and transfer oil.

Manual transmission oil/Transfer oil

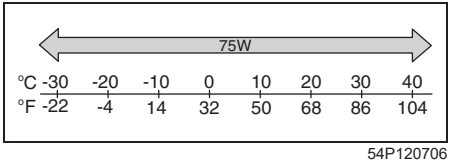

54P120706

We highly recommend you use “MARUTI GENUINE GEAR OIL 75W-85” for front/ rear differential oil.

Front/rear differential oil

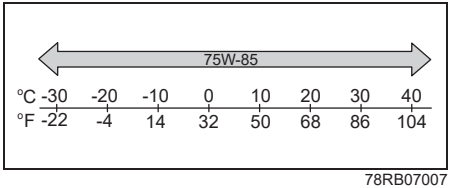

78RB07007

Gear Oil Level Check

Manual transmission

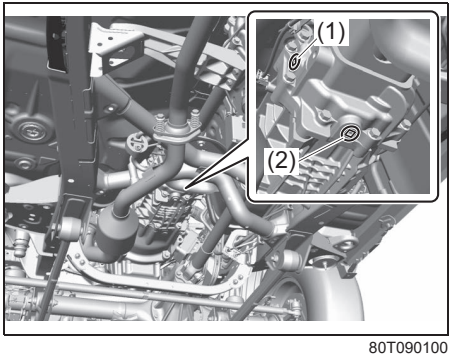

80T090100

(1) Oil filler and level plug
(2) Oil drain plug

Transfer

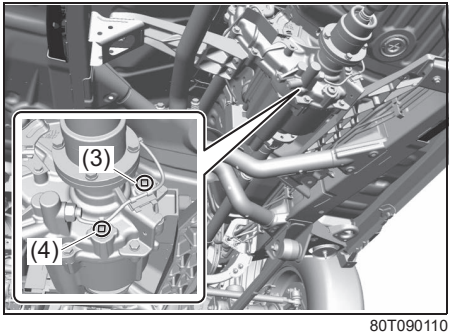

80T090110

(3) Oil filter and level plug
(4) Oil drain plug

Front/rear differential

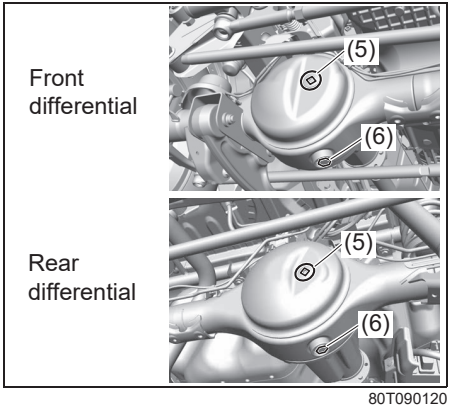

80T090120

(5) Oil filter and level plug
(6) Oil drain plug

To check the gear oil level, use the following procedure:

1) Park the vehicle on a level surface with the parking brake applied. Then, stop the engine.
2) Remove the oil filler and level plug.

For the manual transmission;

3) If gear oil flows from the plug hole, the oil level is correct. Reinstall the plug. If gear oil does not flow from the plug hole, add oil through the filler plug hole until oil flows a little from the plug hole.

For the transfer and front/rear differential;

3) Check the inside of the hole with your finger. If the oil level comes up to the bottom of the plug hole, the oil level is correct. If so, reinstall the plug.
4) If the oil level is low, add gear oil through the oil filler and level plug hole until the oil level reaches the bottom of the filler hole, and then reinstall the plug.

Tightening torque for oil filler and level plug

Manual transmission (1)(2):
23 Nm (2.3 kg-m)

Transfer (3)(4):
23 Nm (2.3 kg-m)

Front/rear differential (5)(6):
(5)50 Nm (5.0 kg-m)
(6)55 Nm (5.6 kg-m)

⚠ CAUTION

After driving the vehicle, the gear oil temperature may be high enough to burn you. Wait until the oil filler and level plug are cool enough to touch with your bare hands before inspecting gear oil level.

NOTICE

Be sure to use new plug with new gasket to avoid looseness of the plug and oil leakage.

Gear Oil Change

Since special procedures, materials and tools are required, ask your Maruti Suzuki authorized workshop for this job.

Clutch

Clutch Pedal

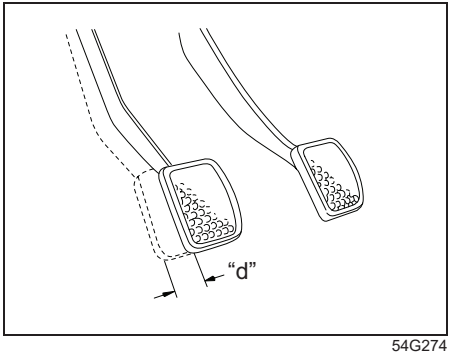

54G274

Clutch pedal play "d":
MAX 10 mm

Measure the clutch pedal play by moving the clutch pedal with your hand and measuring the distance it moves until you feel slight resistance. The play in the clutch pedal should be less than the specified values. If the play is more than the above, or clutch dragging is felt with the pedal fully depressed, have the clutch inspected by a Maruti Suzuki authorized workshop.

Clutch Fluid

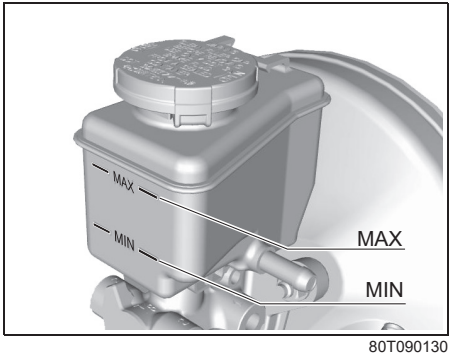

80T090130

Check the clutch pedal for smooth operation and clutch fluid level from time to time. If clutch dragging is felt with the pedal fully depressed, have the clutch inspected by a Maruti Suzuki authorized workshop. If the clutch fluid level is near "MIN" line, fill it up to "MAX" line with DOT3 or SAE J1703 brake fluid.

NOTICE

Clutch fluid is supplied from brake fluid reservoir. If your clutch fluid level is increased or near the "MIN" line, there is a possibility of clutch or brake fluid leakage or abnormal wear of clutch.
Have your vehicle inspected by a Maruti Suzuki authorized workshop.

Brakes

Brake Fluid

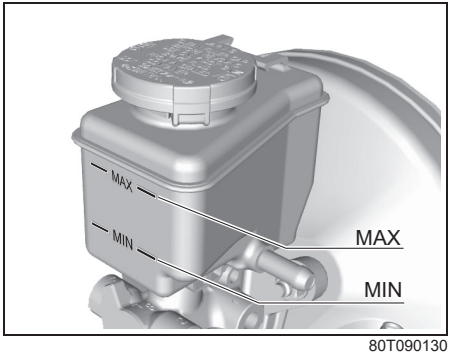

80T090130

Check the brake fluid level by looking at the reservoir in the engine compartment. Check that the fluid level is between “MAX” and “MIN” lines.

⚠ WARNING

- **Failure to follow the guidelines below can result in personal injury or serious trouble in the brake system.**
  - **If the brake fluid in the reservoir drops below a certain level, the brake warning light on the instrument cluster will come on (the engine must be running with the parking brake fully disengaged). Should the light come on, immediately ask your Maruti Suzuki authorized workshop to inspect the brake system.**
  - **A rapid fluid loss indicates leakage in the brake system. In this case, immediately ask your Maruti Suzuki authorized workshop to inspect the brake system.**
  - **Do not use any fluid other than DOT3 or SAE J1703 brake fluid. Do not use reclaimed fluid or fluid that has been stored in old or open containers. It is essential that foreign particles and other liquids are kept out of the brake fluid reservoir.**

(Continued)

⚠ WARNING

(Continued)

- **Brake fluid is harmful or fatal if swallowed, and harmful if it comes in contact with skin or eyes. If swallowed, do not induce vomiting. Immediately contact a poison control center or a physician. If brake fluid gets in eyes, flush eyes with water and seek medical attention. Wash thoroughly after handling. Solution can be poisonous to animals. Keep out of reach of children and animals.**

NOTICE

- **If your brake fluid level is near the “MIN” line, there is a possibility of brake pad and/or shoe wear and brake fluid leakage. In this case, ask your Maruti Suzuki authorized workshop to inspect the brake system.**
- **Brake fluid can damage painted surfaces. Be careful when refilling the reservoir.**

NOTE:
- *The fluid level can be expected to gradually fall as the brake pad and/or shoe wear.*
- *Brake fluid absorbs water over time and brake fluid with high water content may cause vapor lock or brake system malfunction.*
  Replace the brake fluid according to the maintenance schedule in this owner's manual.

Brake Pedal

Check brake pedal stroke. If the stroke is so large, have the brake system inspected by a Maruti Suzuki authorized workshop. If you doubt the brake pedal is at its normal height, check it as follows:

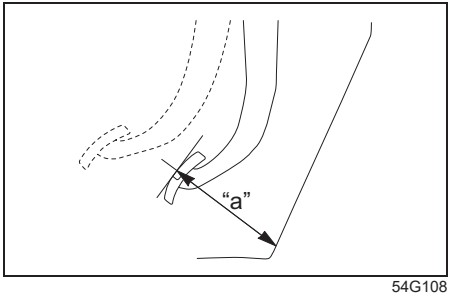

54G108

Minimum distance between brake pedal and floor carpet "a"

89 mm

With the engine running, measure the distance between the brake pedal and floor carpet when the pedal is depressed with approximately 30 kg of force. The minimum distance required is as specified. Since your vehicle's brake system is self-adjusting, there is no need for pedal adjustment.
If the pedal to floor carpet distance as measured above is less than the minimum distance required, have your vehicle inspected by a Maruti Suzuki authorized workshop.

NOTE:
- *When measuring the distance between the brake pedal and floor wall, be sure not to include the floor mat or rubber on the floor carpet in your measurement.*
- *Measure the distance at the brake pedal's side facing toward the driver's door.*

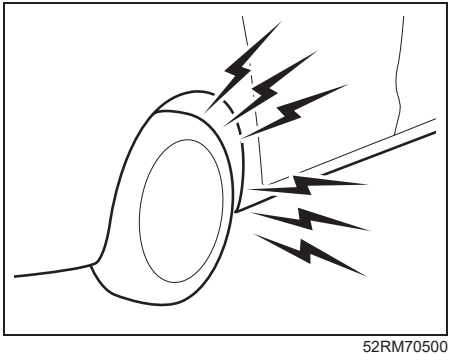

52RM70500

⚠ WARNING

If the brake pad lining becomes worn and it has reached its minimum thickness, squealing noise sounds during braking.
If you hear this noise, have your vehicle inspected by a Maruti Suzuki authorized workshop.
Continued driving with this condition can cause an accident.

⚠ CAUTION

If you experience any of the following problems with your vehicle's brake system, have your vehicle inspected by a Maruti Suzuki authorized workshop.
- **Poor braking performance**
- **Uneven braking (brakes not working uniformly on all wheels)**
- **Excessive pedal travel**
- **Brake dragging**

Parking Brake

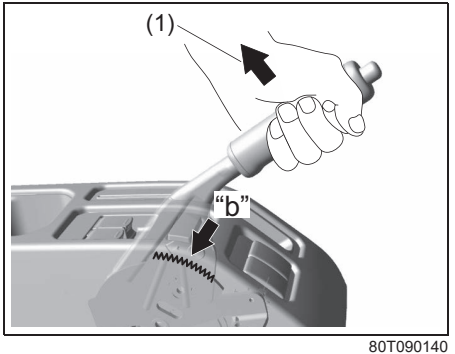

80T090140

Ratchet tooth specification "b":
4th – 9th
Lever pull force (1):
200 N (20 kg)

Check the parking brake for proper adjustment by counting the number of clicks made by the ratchet teeth as you slowly pull up on the parking brake lever to the point of full engagement. The parking brake lever should stop between the specified ratchet teeth and the rear wheels should be securely locked. If the parking brake is not properly adjusted or the brakes drag is suspected even after the lever has been fully released, have the parking brake inspected and/or adjusted by a Maruti Suzuki authorized workshop.

Brake Discs and Brake Drums

Brake disc

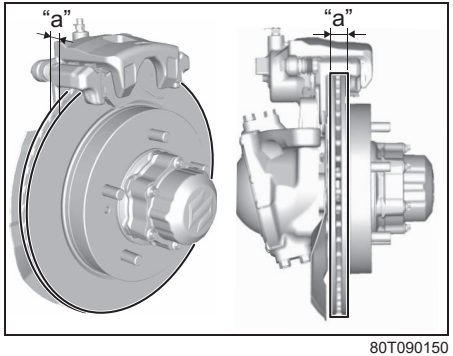

80T090150

Brake location	Minimum thickness "a"
Front wheels	15.0 mm

Brake drum

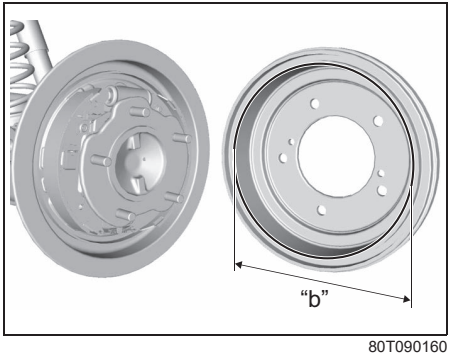

80T090160

Brake location	Maximum inner diameter "b"
Rear wheels	222 mm

If the measured thickness or inner diameter of the most worn part falls below or exceeds the value indicated above, the parts should be replaced with a new one. The measurement involves disassembling each brake and requires the use of a micrometer or caliper, which must be done according to the instructions described in the relevant service manual or available from the relevant repair information site.

Steering Wheel

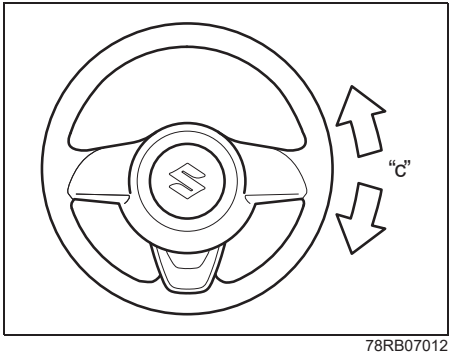

78RB07012

Steering wheel play "c":
0–30 mm

Check the free play of the steering wheel by gently turning it from left to right and measuring the distance that it moves before you feel slight resistance. The play should be between the specified values.

Check that the steering wheel turns easily and smoothly without rattling by turning it all the way to the right and to the left while driving very slowly in an open area. If the amount of free play is not as specified or you find anything else to be wrong, an inspection must be performed by a Maruti Suzuki authorized workshop.

Tyres

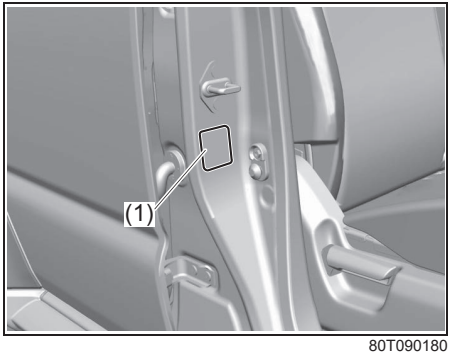

80T090180

The front and rear tyre pressure specifications are listed in the tyre information label (1). Both front and rear tyres should have the specified tyre pressure.

Note that the value does not apply to the compact spare tyre, if equipped.

Tyre Inspection

Inspect your vehicle's tyres at least once a month or before long trip by performing the following checks:

1) Measure the air pressure with a tyre gauge. Adjust the pressure if necessary.

⚠ WARNING

- **Air pressures should be checked when the tyres are cold or you may get inaccurate readings.**
- **Check the tyre pressure from time to time while inflating the tyre gradually, until the specified pressure is obtained.**
- **Never under-inflate or over-inflate the tyres.**
  Under-inflation can cause unusual handling characteristics or can cause the rim to slip on the tyre bead, resulting in an accident or damage to the tyre or rim.
  Over-inflation can cause the tyre to burst, resulting in personal injury. Over-inflation can also cause unusual handling characteristics which may result in an accident.

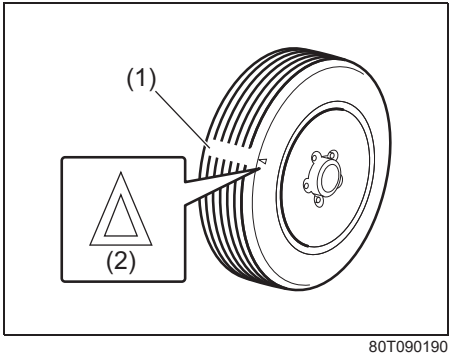

80T090190

(1) Tread wear indicator
(2) Indicator location mark

2) Check that the depth of the tread groove is more than 1.6 mm. To help you check this, the tyres have molded-in tread wear indicators in the grooves. When the indicators appear on the tread surface, the remaining depth of the tread is 1.6 mm or less and the tyre should be replaced.
3) Check for abnormal wear, cracks and damage. Any tyres with cracks or other damage should be replaced. If any tyres show abnormal wear, have them inspected by a Maruti Suzuki authorized workshop.

⚠ CAUTION

Hitting curbs and running over rocks can damage tyres and affect wheel alignment. Have tyres and wheel alignment checked periodically by a Maruti Suzuki authorized workshop.

4) Check for loose wheel nuts.
5) Check that there are no nails, stones or other objects sticking into the tyres.

⚠ WARNING

- **Your Maruti Suzuki vehicle is equipped with tyres which are all the same type and size. This is important to ensure proper steering and handling of the vehicle. Never mix tyres of different size or type on the four wheels of your vehicle. The size and type of tyres used should be only those approved by Maruti Suzuki as standard or optional equipment for your vehicle.**

(Continued)

⚠ WARNING

(Continued)

- **Replacing the wheels and tyres equipped on your vehicle with certain combinations of aftermarket wheels and tyres can significantly change the steering and handling characteristics of your vehicle.**
- **Therefore, use only those wheel and tyre combinations approved by Maruti Suzuki as standard or optional equipment for your vehicle.**

NOTICE

- **Replacing the original tyres with tyres of a different size may result in false speedometer or odometer readings. Check with a Maruti Suzuki authorized workshop before purchasing replacement tyres that differ in size from the original tyres.**
- **Replacing a tyre with one of a different size, or using different brands among the four tyres can result in damage to the drive train.**

Tyre Rotation

5-tyre rotation

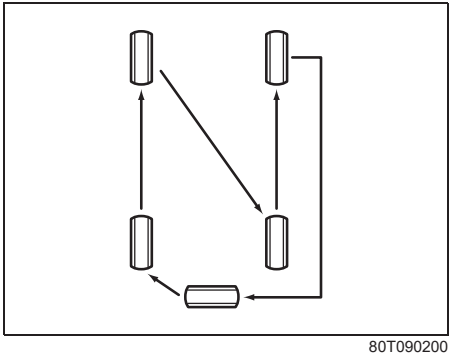

80T090200

4-tyre rotation

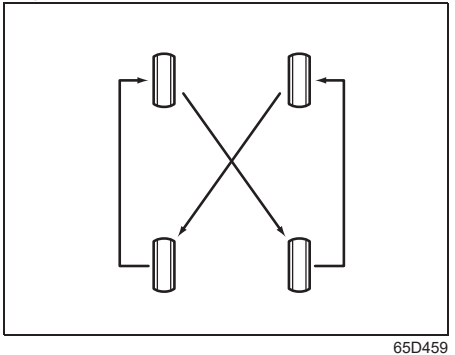

65D459

To avoid uneven wear of your tyres and to prolong their life, rotate the tyres as illustrated. Tyres should be rotated every 10000 km. After rotation, adjust front and rear tyre pressures to the specification listed on your vehicle's Tyre Information Label.

NOTE:
- *To change the tyres, refer to "Changing Wheels" in "EMERGENCY SERVICE" section.*

Wheel Balancing
If the vehicle vibrates abnormally on smooth road, have the wheel balanced at a Maruti Suzuki authorized workshop.

Wheel Alignment
In case of abnormal tyre wear or pulling towards one side, have the wheel aligned at a Maruti Suzuki authorized workshop.

Tubeless Tyres
The vehicle is equipped with Tubeless Tyres. In tubeless tyre, a thin layer of butyl rubber is used for lining the inside of the tubeless tyre. This layer is to prevent air loss and fulfilling the purpose of tube. The air pressure is maintained by the sealing between tyre bead and wheel rim. Tubeless tyres are having advantage of slow air loss and preventing sudden deflation while driving.

Care and maintenance tips for tubeless tyres
1) Always maintain recommended inflation pressure. Driving continuously at low inflation pressure can lead to tyre damage.
2) In case any leakage is found, check for any nail penetration/valve core damage or rim bent. Damaged wheel must not be used.
3) In case tyre has run at low pressure, it must be inspected for any defect.
4) Whenever new tyre is fitted, replace the valve.
5) If continuous high speed driving is required, increase tyres pressure by 5 psi over recommended inflation pressure.
6) Never run the tyre beyond TWI (Tread wear indicator). The tyre is recommended to be replaced when the remaining tread has worn to this point. The indicators are spaced across the tread around the tyre marked by a triangular symbol (TWI).
7) Always prefer tubeless tyre mounting machine. In case of manual mounting-tyre/wheel rim damage may occur.
8) In case of any problem, please get in touch with a Maruti Suzuki authorized workshop.

Battery

⚠ WARNING

- **Batteries produce flammable hydrogen gas. Keep flames and sparks away from the battery or an explosion may occur. Never smoke when working near the battery.**
- **When checking or servicing the battery, disconnect the negative cable. Be careful not to cause a short circuit by allowing metal objects to contact the battery posts and the vehicle at the same time.**
- **To avoid harm to yourself or damage to your vehicle or battery, follow the jump-starting instructions in "EMERGENCY SERVICE" section if it is necessary to jump-start your vehicle.**
- **Diluted sulfuric acid spilled from battery can cause blindness or severe burns. Use proper eye protection and gloves. Flush eyes or body with ample water and get medical care immediately if suffered. Keep batteries out of reach of children.**

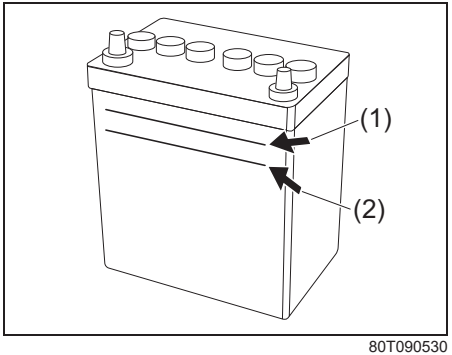

80T090530

For maintenance-free battery (cap-less type), you need not add water. For traditional type battery, which has water filler caps, the level of the battery solution must be kept between the upper level line “MAX” (1) and the lower level line “MIN” (2) at all times. If the level is found to be below the lower level line (2), add distilled water to the upper level line (1). You should periodically check the battery, battery terminals, and battery hold-down bracket for corrosion. Remove corrosion using a stiff brush and ammonia mixed with water, or baking soda mixed with water. After removing corrosion, rinse with clean water.

If your vehicle is not going to be driven for a month or longer, disconnect the cable from the negative terminal of the battery to help prevent discharge.

⚠ WARNING

If the battery is used with battery level being less than the lower level line “MIN” (2), it may cause reduced battery life, an exothermic heat, or an explosion by hydrogen gas occurring from the battery. Do not use the battery with battery level being less than the lower level line “MIN” (2).

NOTICE

- **If the battery liquid is added more than the upper level line “MAX” (1), liquid may leak by vibrations during driving or liquid may spray out in some case depending on the condition of battery charging. These may cause damage to the parts near the battery. If the battery liquid overspills, immediately wash away with water. Do not add the battery liquid more than the upper level line “MAX” (1).**

(Continued)

NOTICE

(Continued)

- **If your vehicle is equipped with the ENG A-STOP system and the battery which is exclusive for the ENG A-STOP system is used, only use the specified type of battery for ENG A-STOP system. Refer to “SPECIFICATIONS” section for details. Otherwise, you could damage your vehicle, and the ENG A-STOP system could not be available. If a vehicle battery has to be replaced, consult with a Maruti Suzuki authorized workshop.**

NOTE:
The battery liquid is consumed when the battery is used. If the level is found to be less than the center of upper level “MAX” (1) and lower level “MIN” (2), add distilled water till it reaches the upper level line “MAX” (1).

Replacement of the battery

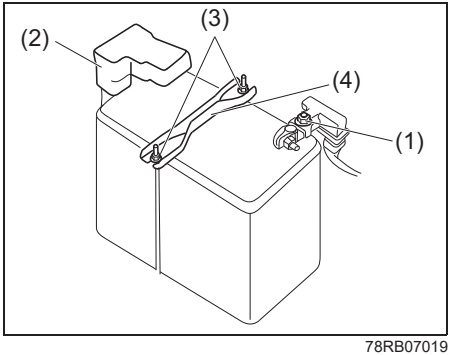

78RB07019

To remove the battery:
1) Disconnect the negative cable (1).
2) Disconnect the positive cable (2).
3) Remove the retainer nuts (3) and remove the retainer (4).

To install the battery:
1) Install the battery in the reverse order of removal.
2) Tighten the bracket bolt and battery cables securely.

NOTE:
- *When the battery is disconnected, some of the vehicle's functions will be initialized and/or deactivated.*
  These functions must be required to reset after the battery is reconnected.
- *Do not disconnect the battery terminals for at least one minute after the ignition switch is turned off, or the engine switch is pressed to change the ignition mode to "LOCK" (OFF).*

⚠ WARNING

Batteries contain toxic substances including sulfuric acid and lead. They could have potential negative consequences for the environment and human health. Used batteries must be disposed of or recycled according to applicable rules or regulations and must not be disposed of with ordinary household trash. Make sure not to tip over the battery when you remove it from the vehicle. Otherwise, sulfuric acid could run out and you might get injury.

NOTICE

After stopping the engine, controller and system are operated for a while. Therefore, before removing the battery, wait for more than one minute after turning the ignition switch to "OFF" or changing the ignition mode to "LOCK" (OFF).

(Battery label)

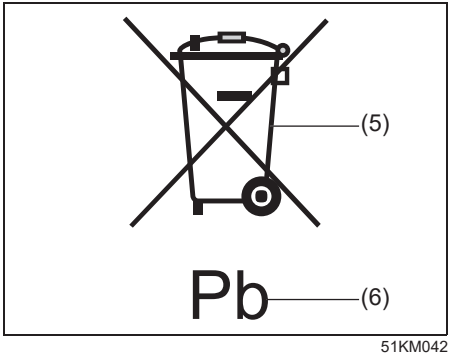

51KM042

(5) Crossed-out wheeled bin symbol
(6) Chemical symbol of “Pb”

The crossed-out wheeled bin symbol (5) located on the battery label indicates that the used battery should be collected separately from ordinary household trash. The chemical symbol of “Pb” (6) indicates the battery contains more than 0.004% lead.

By ensuring the used battery is disposed of or recycled correctly, you will help prevent potential negative consequences for the environment and human health, which could otherwise be caused by inappropriate trash handling of the battery. The recycling of materials will help to conserve natural resources. For more detailed information about disposing of or recycling the used battery, consult with a Maruti Suzuki authorized workshop.

Fuses

Your vehicle has three types of fuses, as described below:

Main fuse
The main fuse takes current directly from the lead-acid battery.

Primary fuses
These fuses are between the main fuse and individual fuses, and are for electrical load groups.

Individual fuses
These fuses are for individual electrical circuits.

To remove a fuse, use the fuse puller provided in the fuse box cover.

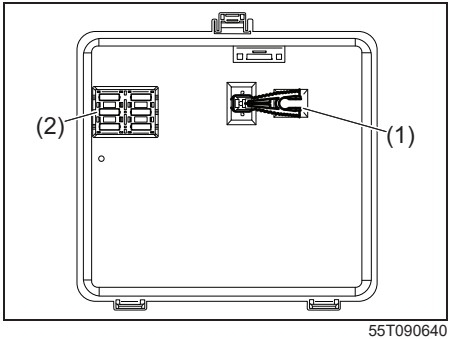

55T090640

(1) Fuse puller
(2) Spare fuse

Fuses in Engine Compartment

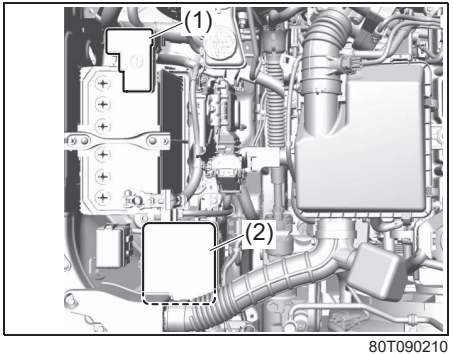

80T090210

(1) Main fuse box
(2) Relay box

Main fuse box

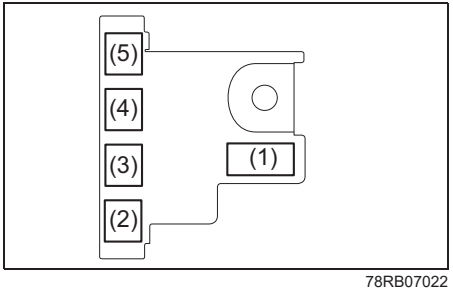

78RB07022

Relay box

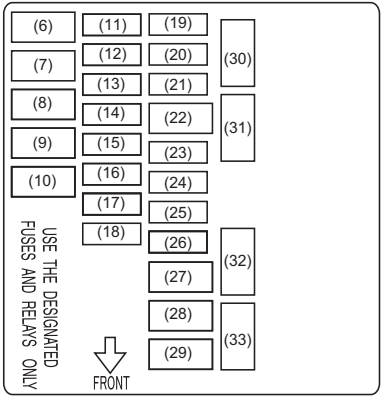

78RB07023

MAIN FUSE / PRIMARY FUSE		
(1)	120 A	FL1
(2)	100 A	FL2
(3)	80 A	SPARE
(4)	100 A	FL4
(5)	50 A	FL5
(6)	50 A	Ignition switch
(7)	40 A	ABS motor
(8)	–	Blank
(9)	30 A	Blower fan
(10)	30 A	Starter motor
(11)	30 A	Headlight cleaner
(12)	15 A	Headlight (Right)
(13)	15 A	Headlight (Left)
(14)	25 A	ABS/ESP® control module
(15)	30 A	DCDC 1
(16)	–	Blank
(17)	25 A	Headlight high
(18)	30 A	Back up
(19)	30 A	DCDC 2
(20)	15 A	Fuel injection
(21)	15 A	Transmission
(22)	50 A	Ignition sw2
(23)	10 A	A/C compressor
(24)	10 A	4WD
(25)	20 A	Front fog light
(26)	–	Blank
(27)	40 A	Power steering
(28)	–	Blank
(29)	40 A	Radiator fan
(30)	5 A	T/M 2
(31)	5 A	Starter motor signal
(32)	15 A	Headlight high (Left)
(33)	15 A	Headlight high (Right)

The main fuse, primary fuses and some of the individual fuses are located in the engine compartment. If the main fuse blows, no electrical component will function. If a primary fuse blows, no electrical component in the corresponding load group will function. When replacing the main fuse, a primary fuse or an individual fuse, use a genuine Maruti Suzuki replacement parts or equivalent for individual fuses.
To remove a fuse, use the fuse puller provided in the fuse box. The amperage of each fuse is shown in the back of the fuse box cover.

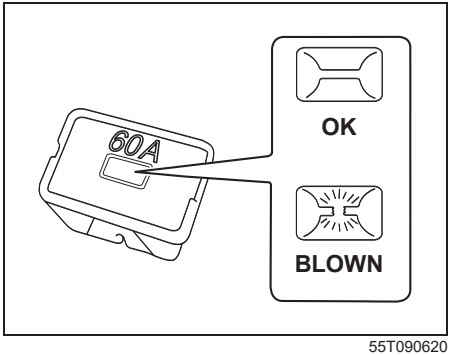

55T090620

⚠ WARNING

If the main fuse or a primary fuse blows, have your vehicle inspected by a Maruti Suzuki authorized workshop. Always use a genuine Maruti Suzuki replacement. Never use a substitute such as a wire even for a temporary repair, or extensive electrical damage and a fire can result.

NOTE:
Check that the fuse box always carries spare fuses.

Fuses Under Dashboard

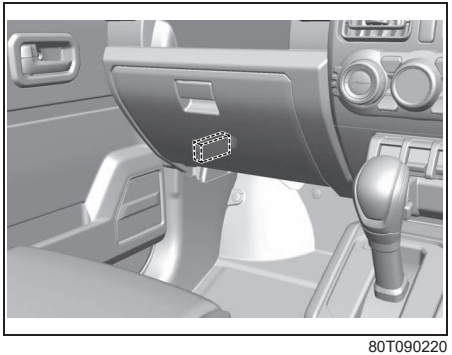

80T090220

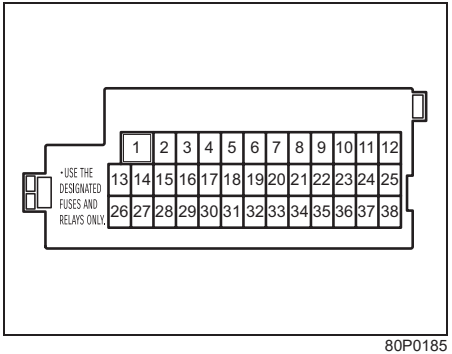

80P0185

PRIMARY FUSE		
(1)	30 A	Power window
(2)	10 A	Meter
(3)	15 A	Ignition coil
(4)	5 A	Ignition-1 signal 2
(5)	20 A	Blank
(6)	20 A	Blank
(7)	–	Blank
(8)	20 A	Door lock
(9)	15 A	Steering lock
(10)	10 A	Hazard
(11)	5 A	A-STOP
(12)	10 A	Rear fog lamp
(13)	5 A	ABS/ESP® control module
(14)	15 A	Seat heater
(15)	5 A	Ignition-1 signal 3
(16)	10 A	Dome light-2
(17)	5 A	Dome light
(18)	15 A	Radio
(19)	5 A	CONT
(20)	5 A	Key 2

(21)	20 A	Power window timer
(22)	5 A	Key
(23)	15 A	Horn
(24)	5 A	Tail light (Left)
(25)	10 A	Tail light
(26)	10 A	Airbag
(27)	10 A	Ignition-1 signal
(28)	10 A	Back-up light
(29)	5 A	ACC-3
(30)	20 A	Rear defogger
(31)	10 A	Heated mirror
(32)	15 A	ACC-2
(33)	5 A	ACC
(34)	10 A	Rear wiper
(35)	5 A	Ignition-2 signal
(36)	15 A	Washer
(37)	25 A	Front wiper
(38)	10 A	Stop light

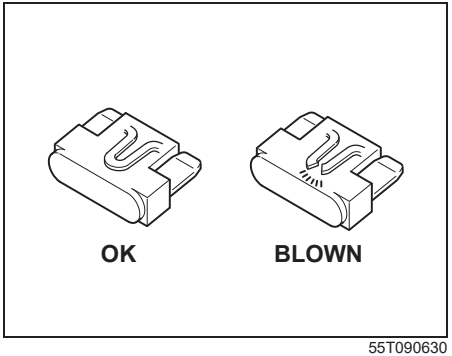

55T090630

⚠ WARNING

Always replace a blown fuse with a fuse of the correct amperage. Never use a substitute such as aluminum foil or wire to replace a blown fuse. If you replace a fuse and the new one blows in a short period of time, you may have a major electrical problem. Have your vehicle inspected by a Maruti Suzuki authorized workshop.

Headlight Aiming

Since special procedures are required, ask your Maruti Suzuki authorized workshop for this job.

Bulb Replacement

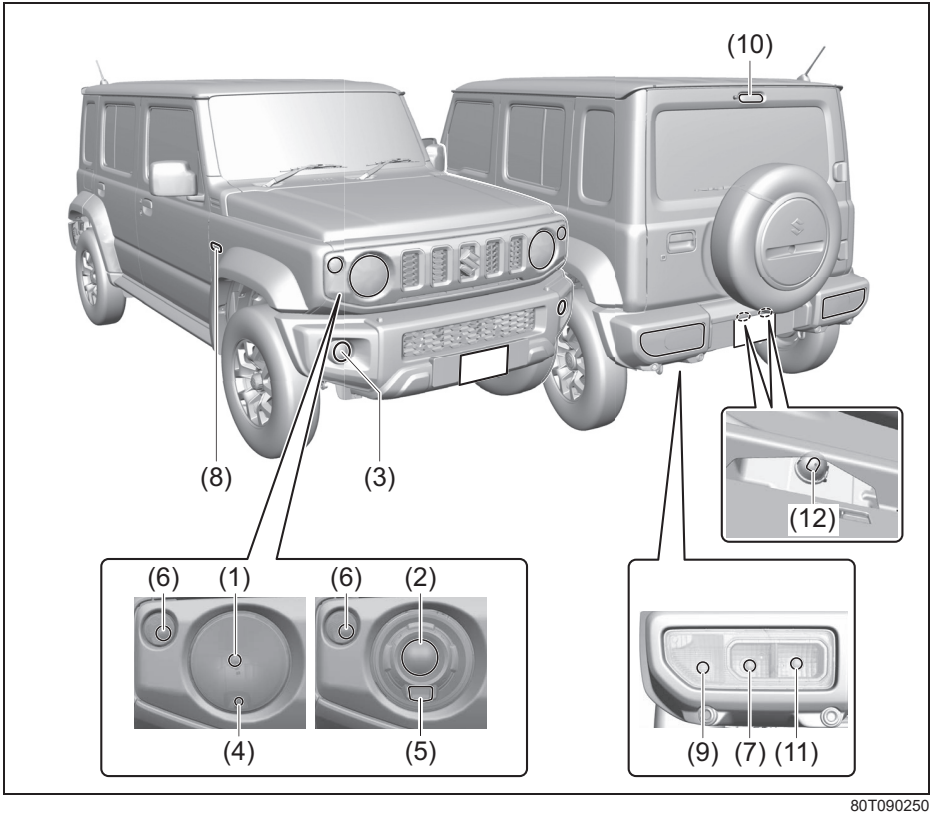

80T090250

No.	ITEM: Lights		WATT-AGE	BULB No.
(1)	Headlight		12V 60/55W	H4
(2)	Headlight*1		LED	–
(3)	Front fog light		12V 19W	H16
(4)	Position light		12V5W	W5W
(5)	Position light*1		LED	–
(6)	Turn signal light	Front	12V 21W	W21W
(7)		Rear		WY21W
(8)	Side turn signal light		12V 5W	–
(9)	Tail / brake light		12V 21/ 5W	W21/ 5W
(10)	High-mount stop light*1		LED	–
(11)	Reversing light		12V21W	W21W
(12)	License plate light		12V5W	W5W

If you need to replace the following lights indicated in the above table, consult with a Maruti Suzuki authorized workshop.

*1: Since the lights are non-disassemble type, you cannot replace a bulb. Replace the target assembly if any light is defective.

⚠ CAUTION

- **Light bulbs can be hot enough to burn your finger right after turning off lights. This is true especially for halogen headlight bulbs. Replace the bulbs after they become cool enough.**
- **The headlight bulbs are filled with pressurized halogen gas. They can burst and injure you if they are hit or dropped. Handle them carefully.**
- **To avoid injury by sharp-edged parts of the body, wear gloves and a long-sleeved shirt when replacing light bulbs.**

NOTICE

- **The oils from your skin may cause a halogen bulb to overheat and burst when the lights are on. Grasp a new bulb with a clean cloth.**
- **Frequent bulb replacement indicates the need for an inspection of the electrical system. This should be carried out by a Maruti Suzuki authorized workshop.**
- **During bulb replacement always use same bulb number as used in vehicle which is imprinted on the said bulb/unit and/or mentioned in this section.**

NOTE:
The inner surface of lens such as the headlights or the rear combination lights may be clouded or dew condensation may occur by driving on a rainy day or washing the vehicle. This is a temporary phenomenon caused by temperature difference between the inside and the outside of the lights. (This is the same phenomenon as the windows are clouded on a rainy day.)
Also, it sometimes seems that water gets into the lights because of waterdrop on the edge of the lens. This is a temporary phenomenon caused by water adherence to the outside of the lights.
The above-mentioned phenomena are not vehicle malfunction.
However, if water is piled up in the lights or large waterdrop adheres to the inner surface of lens, have the vehicle inspected by a Maruti Suzuki authorized workshop.

Non-disassembled Type Lights

Since the lights shown below are non-disassemble type, you cannot replace a light. Replace the target assembly if any light is defective.
If you need to replace the assembly, ask your Maruti Suzuki authorized workshop.

- Headlight (LED type) (if equipped)
- Position light (vehicle with LED headlights)
- Side turn signal light on fender
- High mount stop light

Headlights

LED type

Since special procedures are required, it is recommended that you take your vehicle to a Maruti Suzuki authorized workshop for light replacement.

Halogen type

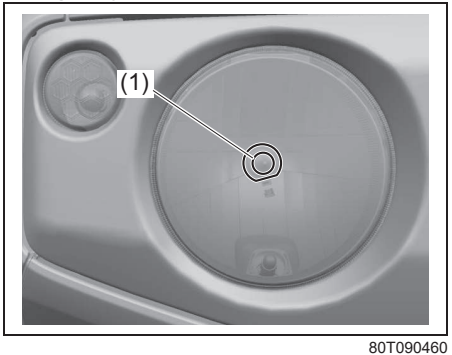

80T090460

(1) Bulb

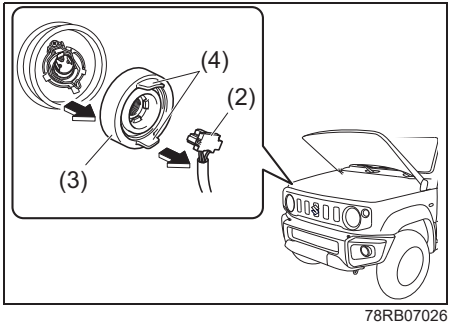

78RB07026

1) Open the engine hood while the engine is stopped. Disconnect the coupler (2). Remove the sealing rubber (3) by pulling the grip (4).

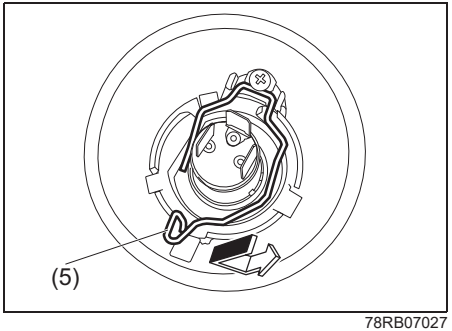

78RB07027

2) Push the retaining spring (5) forward and unhook it. Then remove the bulb. Install a new bulb in the reverse order of removal.

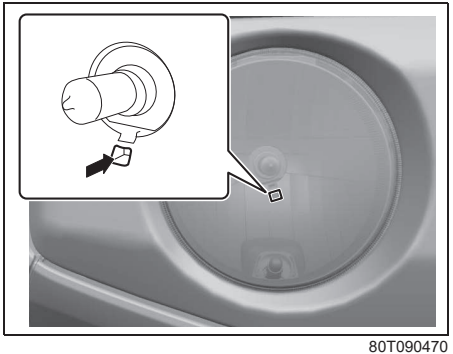

80T090470

NOTE:
You can see the position of retaining spring from the hole of headlight.

Front Turn Signal Light and Front Position Light

For front LED position light (if equipped), it is recommended that you take your vehicle to a Maruti Suzuki authorized workshop for light replacement since special procedures are required.

Vehicle with the halogen headlights

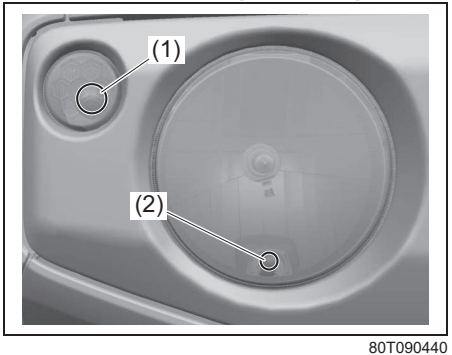

80T090440

(1) Front turn signal light
(2) Front position light

Vehicle with the LED headlights

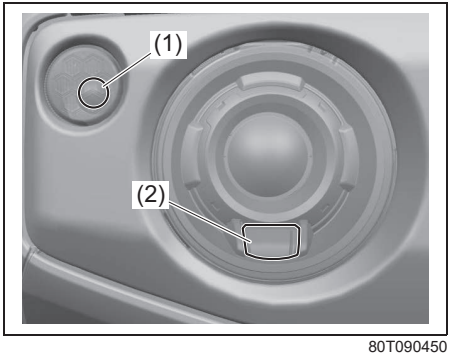

80T090450

(1) Front turn signal light
(2) Front LED position light

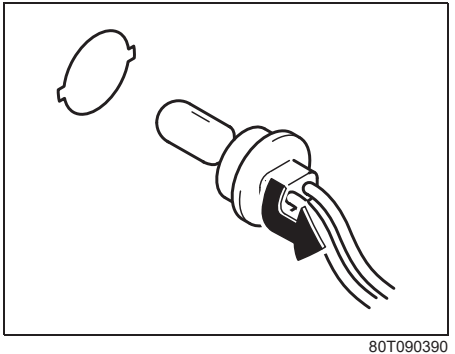

80T090390

1) Open the engine hood while the engine is stopped. To remove the bulb holder of the front turn signal light or the front position light (for vehicle with halogen headlights) from the light housing, turn the holder counterclockwise and pull it out.

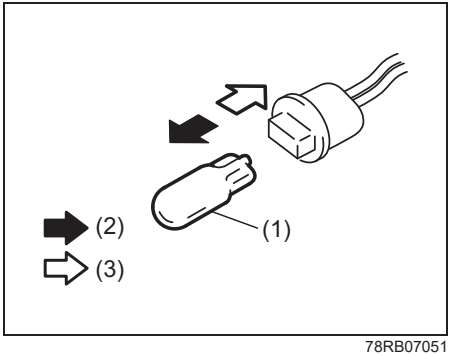

78RB07051

(2) Removal
(3) Installation

2) To remove and install the bulb of the front position light (1), simply pull out or push in the bulb.

Side Turn Signal Light

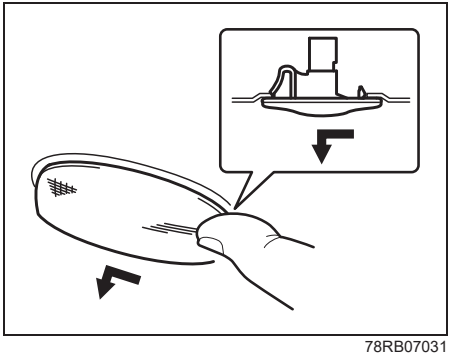

78RB07031

Since the bulb is built-in type, replace it as the light assembly. Remove the light assembly by sliding the light housing leftward with your finger.

Front Fog Light (if equipped)

1) Start the engine. Turn the steering wheel to the opposite side of the fog light to be replaced to replace the bulb easily. Then turn off the engine.

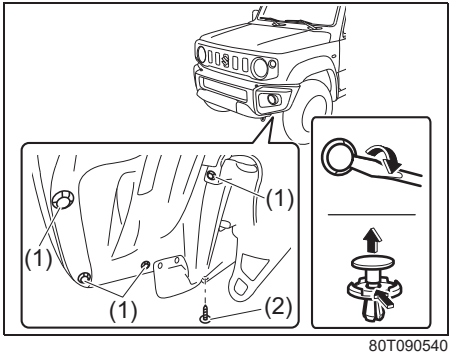

80T090540

2) Remove the clips (1) and screw (2) at the bottom of bumper.
For removing the clip, use a flat-bladed screwdriver as shown in the illustration.

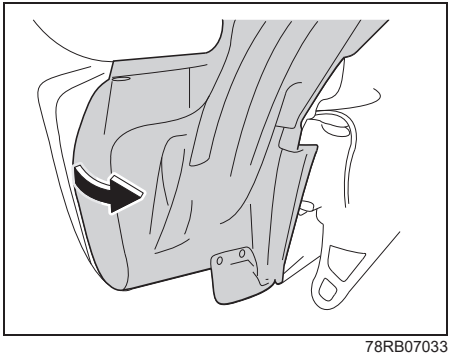

78RB07033

3) Open the end of the cover inside the fender.

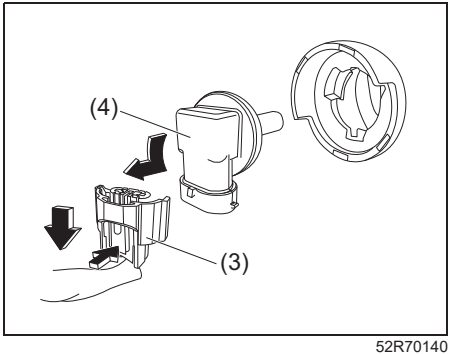

52R70140

4) Disconnect the coupler (3) by pushing the lock release. Turn the bulb holder (4) counterclockwise and remove it.

Rear Combination Light

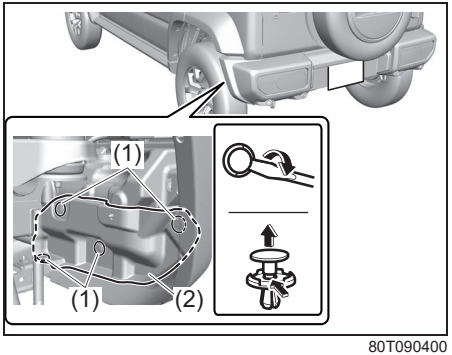

80T090400

1) Remove the clips (1) and then remove the cover (2).

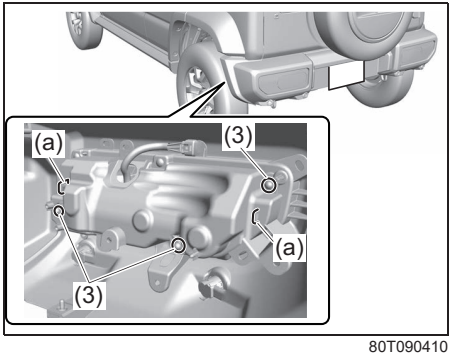

80T090410

2) Remove the nuts (3) and pull the rear combination light from the rear bumper by pushing the hooks (a).

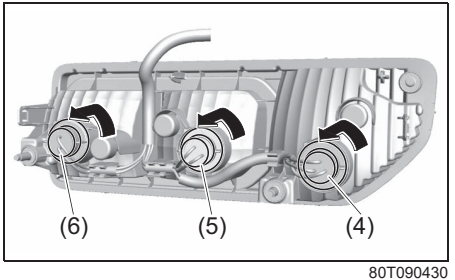

80T090430

(4) Tail / brake light
(5) Rear turn signal light
(6) Reversing light

3) To remove the bulb holder of the above light from the light housing, turn the holder counterclockwise and pull it out.

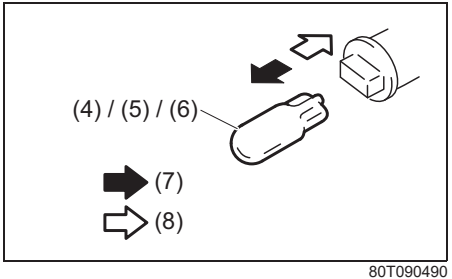

80T090490

(7) Removal
(8) Installation

4) To remove and install the bulb of the tail / brake light (4), the rear turn signal light (5), the reversing light (6), simply pull out or push in the bulb.

License Plate Light

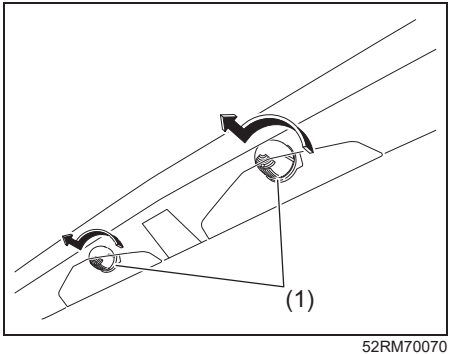

52RM70070

1) Remove the cover (1) by turning it counterclockwise.

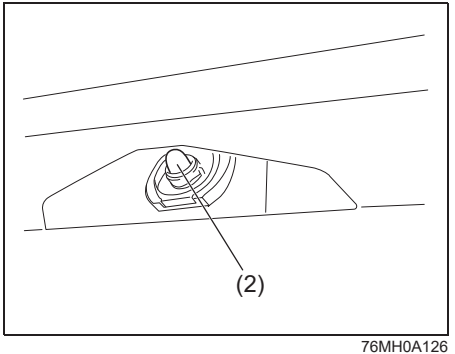

76MH0A126

2) To remove and install the bulb of the license plate light (2), simply pull out or push in the bulb.

High-mount Stop Light

LED is used. It is recommended that you take your vehicle to a Maruti Suzuki authorized workshop for light replacement since special procedures are required.

Interior Light

Front

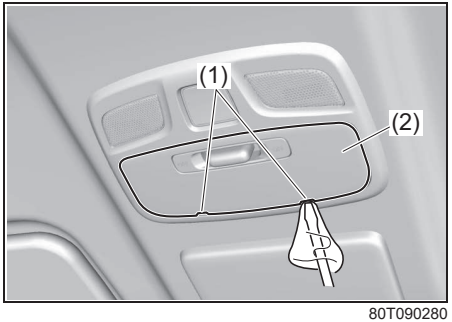

80T090280

1) To prevent scratches, insert a commercially available flat-blade screwdriver covered with a soft cloth into the notches (1), and then remove the lens (2).

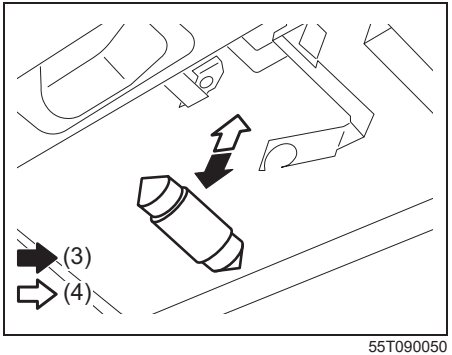

55T090050

(3) Removal
(4) Installation

2) Pull the bulb out and then insert a new one.
3) After replacing the bulb, install the center interior light lens in the reverse order of removal.

Center

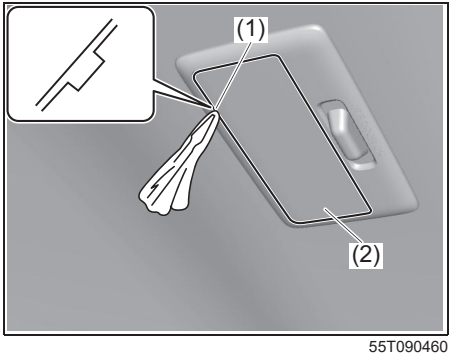

55T090460

1) To prevent scratches, insert a commercially available flat-blade screwdriver covered with a soft cloth into the notch (1), and then remove the lens (2).

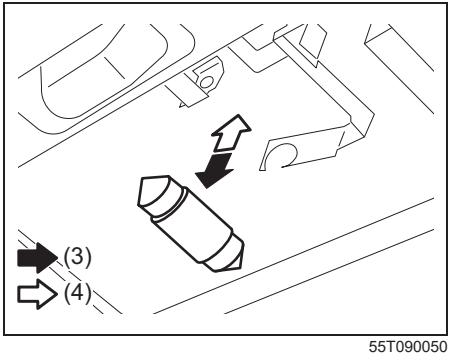

55T090050

(3) Removal
(4) Installation

2) Pull the bulb out and then insert a new one.
3) After replacing the bulb, install the center interior light lens in the reverse order of removal.

Luggage compartment (if equipped)

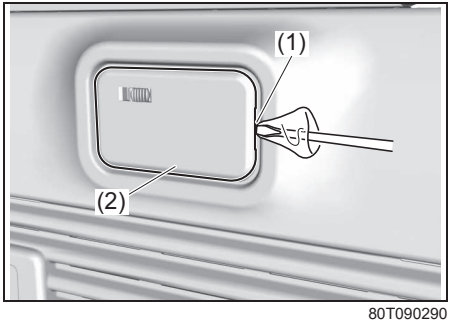

80T090290

1) To prevent scratches, insert a commercially available flat-blade screwdriver covered with a soft cloth into the notch (1), and then remove the lens (2).

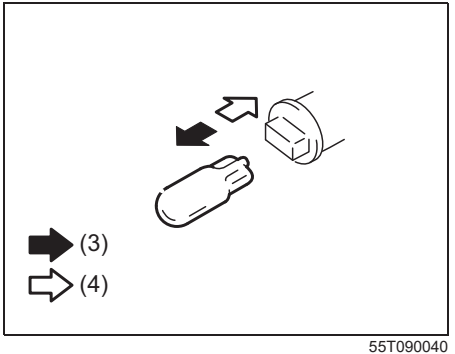

55T090040

(3) Removal
(4) Install

2) Pull the bulb out and then insert a new one.
3) After replacing the bulb, install the luggage compartment light lens in the reverse order of removal.

Headlight Washer Fluid

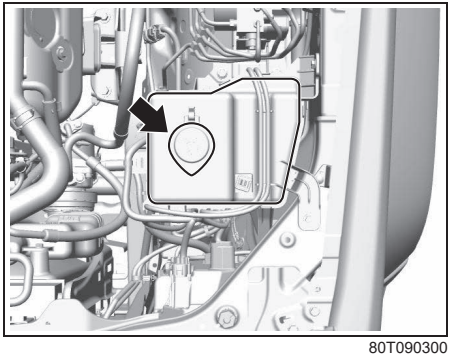

80T090300

Check that there is washer fluid in the tank in the engine room. Refill it if necessary. Use a good quality windshield washer fluid, diluted with water as necessary.

⚠ WARNING

- **Do not use radiator antifreeze in the windshield washer reservoir. This can severely impair visibility when sprayed on the windshield, and also can damage your vehicle's paint.**

(Continued)

⚠ WARNING

(Continued)

- **Do not add washer fluid when the engine is hot or operating as washer fluid contains alcohol and may catch fire if spilled on the engine, etc.**

NOTICE

- **Damage may result if the washer motor is operated with no fluid in the washer tank.**
- **In winter season, be sure to remove snow or ice on the nozzle at the front bumper before operating headlight washer.**
- **To avoid the frozen damage to the nozzle of the headlight washer, be sure to use the specific washer fluid.**

Wiper Blades

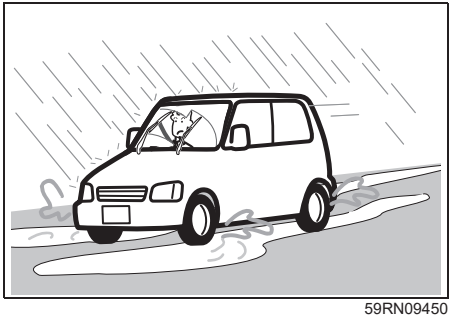

59RN09450

If the wiper blades become brittle or damaged, or make streaks when wiping, replace the wiper blades.

To install new wiper blades, follow the procedures below.

NOTICE

To avoid scratching or breaking the window, do not let the wiper arm strike the window while replacing the wiper blade.

NOTE:
Some wiper blades may be different from the ones described here depending on vehicle specifications. If so, consult with a Maruti Suzuki authorized workshop for proper replacement method.

For Windshield Wipers

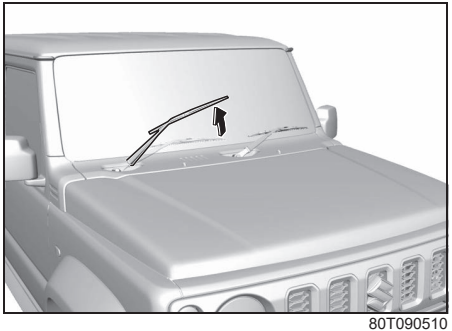

80T090510

1) Hold the wiper arm away from the window.

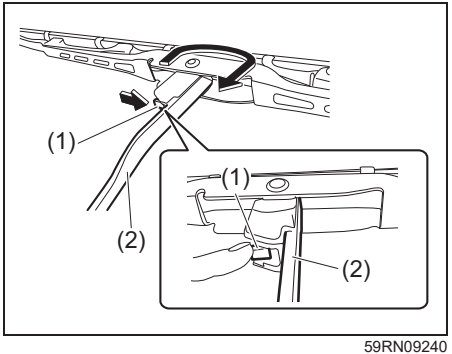

59RN09240

2) Squeeze lock (1) towards wiper arm (2) and remove the wiper frame from the arm as shown.

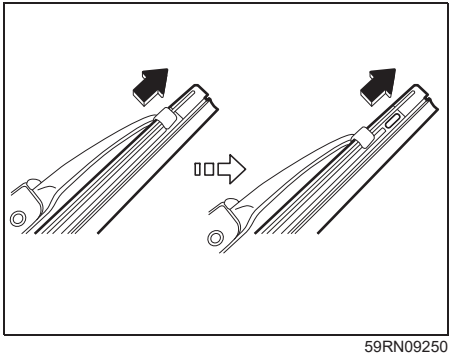

59RN09250

3) Unlock the lock end of the wiper blade and slide the blade out as shown.

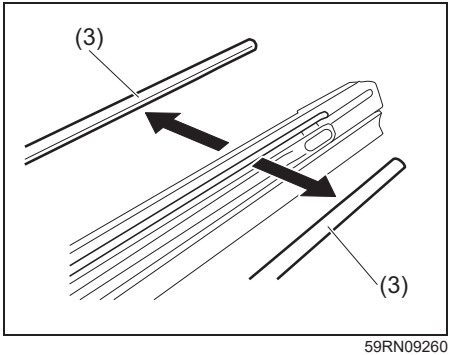

59RN09260

(3) Retainer

4) If the new blade is provided without the two metal retainers, move them from the old blade to the new one.

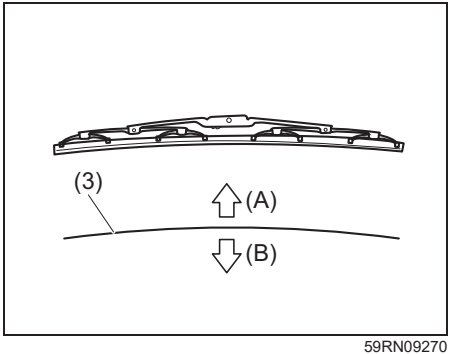

59RN09270

(A) Up
(B) Down

NOTE:
When you install the metal retainers (3), make sure the direction of metal retainers as shown in the above illustration.

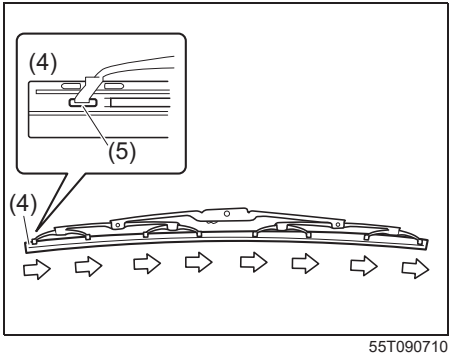

55T090710

(4) Locked end

5) Install the new blade in the reverse order of removal, with the locked end positioned toward the wiper arm. Make sure the blade is properly retained by all the hooks. Lock the blade end into place.
6) Reinstall wiper frame to arm, making sure that the lock lever is snapped securely into the arm.

NOTICE

Fit the stopper side (5) of the wiper blade in the driver's seat side.
Otherwise, the wiper blade may be misaligned while the wiper operates.

For Rear Window Wiper

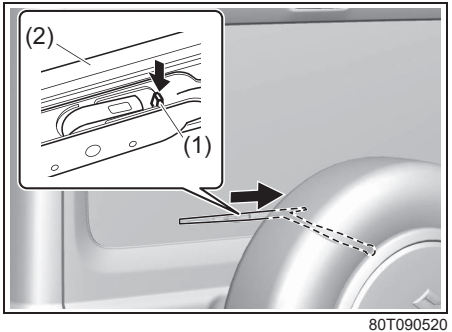

80T090520

(1) Lock end
(2) Wiper blade

1) Lift the rear wiper arm a little from the rear window. Remove the wiper frame from the rear wiper arm by pushing the lock end (1) from the side of wiper blade frame and then by pushing the wiper frame to the direction of the arrow with the lock end (1) free from locking in the above illustration.

NOTE:
Return the rear wiper arm slowly after removing the rear wiper blade.

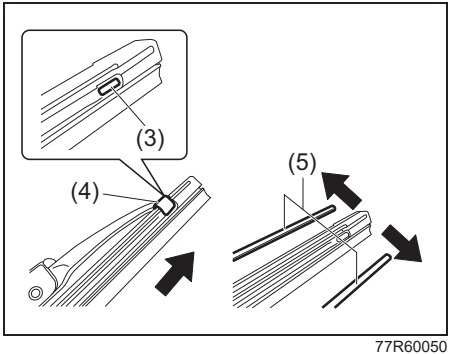

77R60050

(3) Stopper
(4) Hook
(5) Retainer

2) Pull and remove the wiper blade from the wiper frame until the stopper (3) of the wiper frame is taken out of the hook (4). Remove the retainers (5) from the wiper blade.

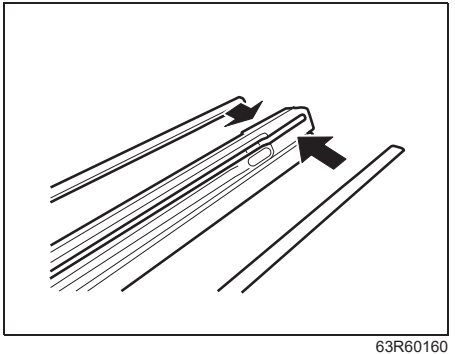

63R60160

3) If the new blade is provided without the two metal retainers, install them from the old blade to the new one.

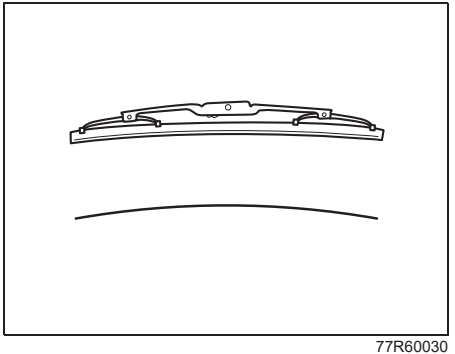

77R60030

4) Install the retainers along the direction of camber as shown in the illustration.

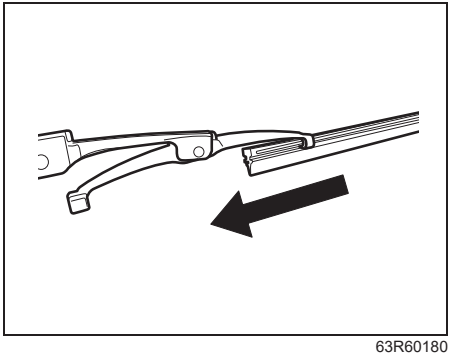

63R60180

5) Slide the new wiper blade into the wiper frame. When installing the wiper blade, put into the side that has no stopper on the wiper blade.

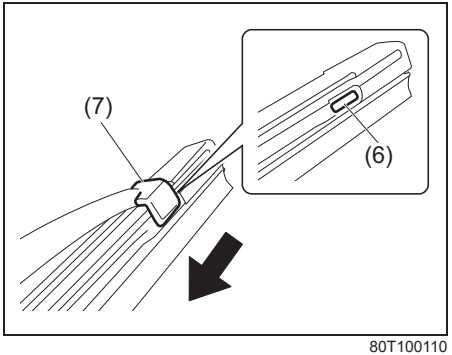

80T100110

(6) Stopper
(7) Hook

6) Fix the wiper blade securely by pushing the hook (7) into the stopper (6).
7) Reinstall the wiper frame to the rear wiper arm in the reverse order of removal. Make sure that the rear wiper blade is installed securely.

Windshield Washer Fluid

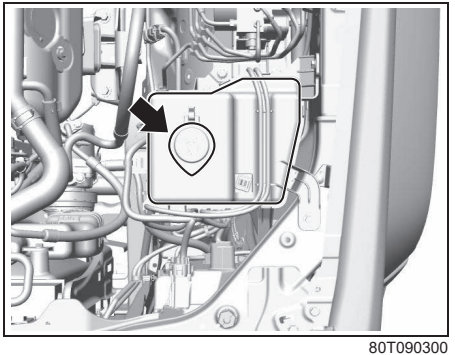

80T090300

Check that there is washer fluid in the tank in the engine room. Refill it if necessary. Use a good quality windshield washer fluid, diluted with water as necessary.

⚠ WARNING

- **Do not use radiator antifreeze in the windshield washer reservoir. This can severely impair visibility when sprayed on the windshield, and also can damage your vehicle's paint.**
- **Do not add washer fluid when the engine is hot or operating as washer fluid contains alcohol and may catch fire if spilled on the engine, etc.**

NOTICE

- **Damage may result if the washer motor is operated with no fluid in the washer tank.**
- **Avoid use of hard water to prevent building of lime scale on the vehicle.**

Air Conditioning System

If you do not use the air conditioner for a long period, such as during winter, it may not give the best performance when you start using it again. To help maintain optimum performance and durability of your air conditioner, it needs to be run periodically. Operate the air conditioner at least once a month for one minute with the engine idling. This circulates the refrigerant and oil and helps protect the internal components.

Air Conditioner Filter Replacement

Since special procedures are required, ask your Maruti Suzuki authorized workshop for this job.

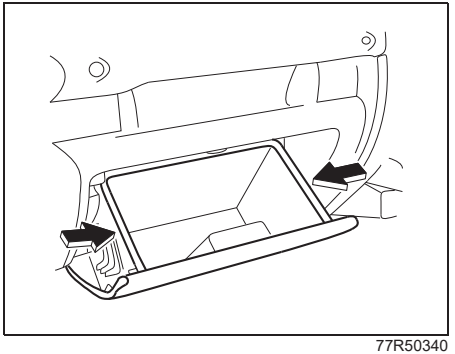

77R50340

1) To approach the air conditioner filter, remove the glove box by pressing both sides of the glove box inward and pulling it out.

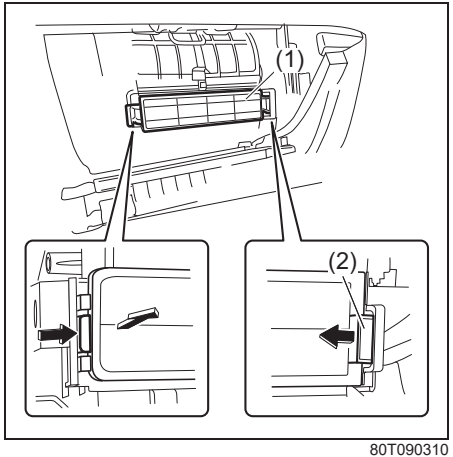

80T090310

2) Unlock the holder (1) and release it from the air conditioner unit.
3) Slide the tab (2) of the holder (1) in an arrow direction and remove the holder.

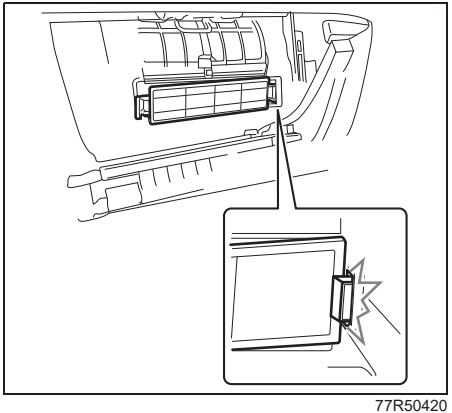

77R50420

NOTICE

Do not apply excessive force to the tab when removing the holder. Otherwise, the tab may be damaged.

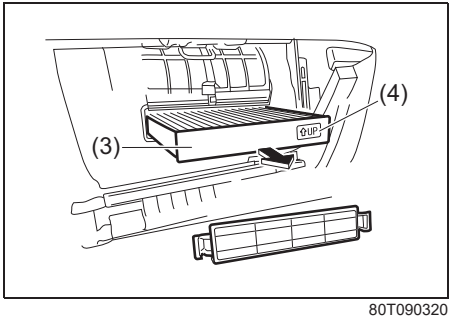

80T090320

4) Pull out the air conditioner filter (3)

NOTE:
When you install a new filter, check that the UP mark (4) faces upward.

Preparation Before Winter Season

Windshield Washer Fluid

To prevent windshield washer fluid from freezing, dilute it by the ratio according to outside temperature.

Lead-acid Battery

Check the liquid measure and the specific gravity of lead-acid battery. When it becomes cold, the battery performance gets worse. Also, it becomes difficult to start the engine by the weak battery. Refer to “Battery” in the “INSPECTION AND MAINTENANCE” section.

Engine Coolant

To prevent the inside of engine from corroding and freezing, use the designated engine coolant. Refer to “Specifications” in the “SPECIFICATIONS” section.

NOTE:
To check the concentration of engine coolant or replace it, ask your Maruti Suzuki authorized workshop.

Winter Tyres and Chocks

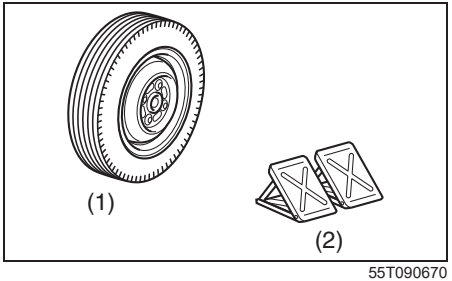

55T090670

(1) Winter tyre
(2) Chock

Winter tyres and chocks are necessary to drive on the snow roads or the frozen roads.

Before Your Driving

Snow on the Roof

80J308

Remove snow on the roof before your driving. If you do not remove it, snow may fall during your driving and it may hinder your view.

Frozen Wiper Blades

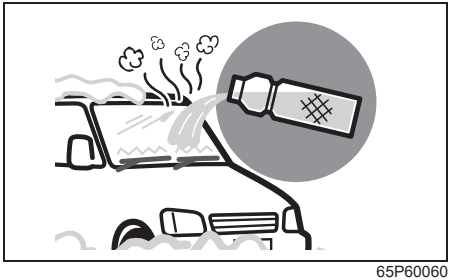

65P60060

Melt ice by pouring lukewarm water. After melting it, wipe off water to prevent refreezing. If you operate the wiper blades forcedly when ice stays freezing, the wiper rubbers may be damaged and the wiper blades may be broken.

Snow and Frost on the Window Glasses

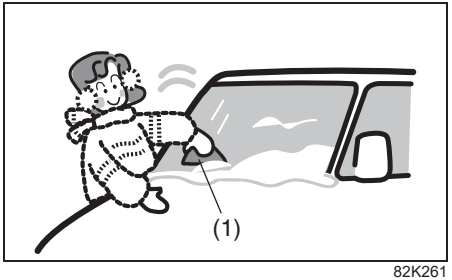

82K261

Use the plastic board (1). You can remove snow and frost not to damage the window glasses.

Frozen Outside Rearview Mirrors

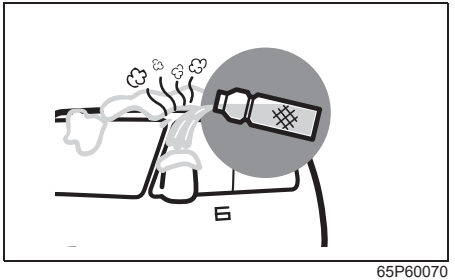

65P60070

Melt ice by pouring lukewarm water. After melting it, wipe off water to prevent refreezing. If you operate the outside rearview mirrors forcedly when ice stays freezing, the outside rearview mirrors may be broken.

NOTICE

- **For the outside rearview mirror folding switch, check if you can move the mirrors by your hands first. Then, operate the switch. If you repeat to operate the switch when ice stays freezing, the mirrors may be broken.**
- **For the remote folding mirrors, deactivate the function of the remote folding mirrors in the cold condition where the outside rear-view mirrors are frozen. If you repeat to operate them when ice stays freezing, the mirrors may be broken.**

Frozen Doors

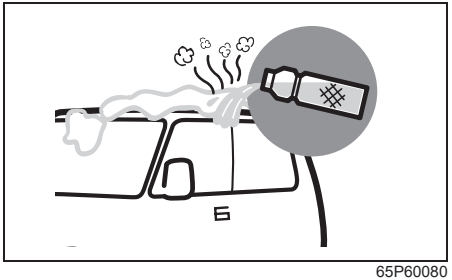

65P60080

Pour lukewarm water except the keyhole on the door. After opening the door, wipe off water. If you open the door forcedly when ice stays freezing, the rubbers around the door may be come off and broken.

Snow Attaching to Shoes

80J312

Remove snow attaching to shoes before getting in your vehicle. If you do not remove it, you may slip when operating the pedals and the window glasses may mist easily because of high humidity inside the vehicle.

When Parking the Vehicle Outside

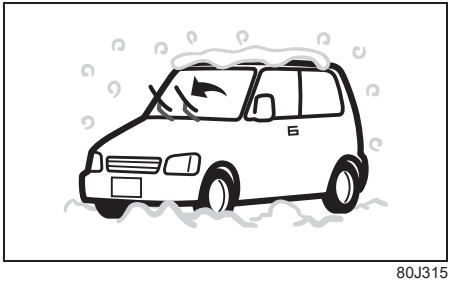

80J315

NOTICE

- **If you park the vehicle under eaves or trees, the roof of the vehicle may be dented by accumulated snow or fallen snow.**
  When it is snowing, do not park the vehicle under eaves or trees.
- **If you park the vehicle outside when it is snowing, the wiper arms may be deformed or the wiper blades may be frozen on the windshield by snow weight. Raise the wiper arms away from the windshield when parking the vehicle.**

EMERGENCY SERVICE

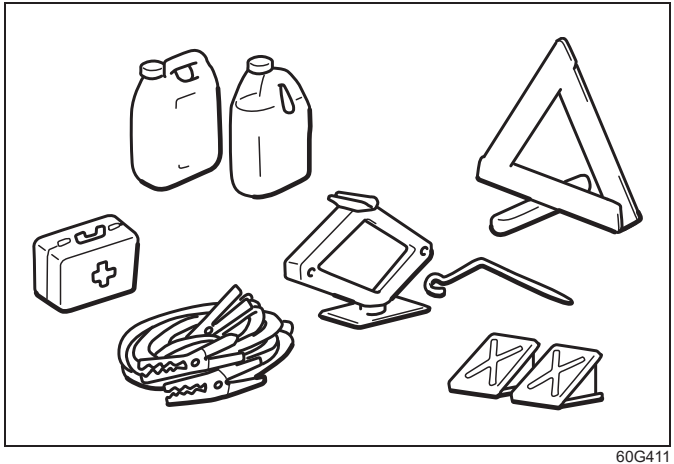

60G411

Towing Your Vehicle 10-1
Jacking Instructions 10-4
Changing Wheels 10-7
Jump-starting Instructions 10-10
Running Out of Battery 10-11
If You Get a Flat Tyre While Driving 10-11
Engine Trouble: Starter Does not Operate 10-12
Engine Trouble: Does not Start 10-12
Engine Trouble: Overheating 10-13
Warning Triangle 10-14

Towing Your Vehicle

If you need to have your vehicle towed, contact a professional service. A Maruti Suzuki authorized workshop can provide you with detailed towing instructions.

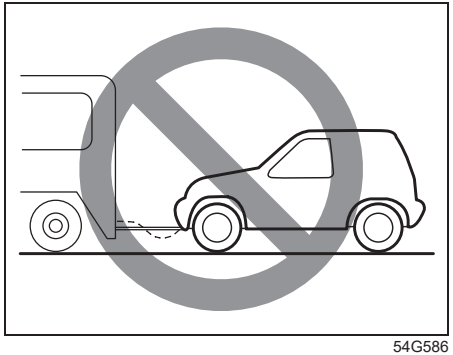

54G586

⚠ WARNING

When you tow your vehicle, refer to the following instructions to avoid accidents and damage to your vehicle. In addition, be sure to observe government and local requirements regarding vehicle lighting and trailer hitches or tow bars.

⚠ WARNING

A safety chain should always be used when you tow your vehicle.

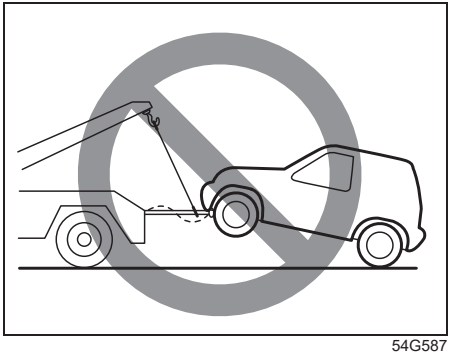

54G587

NOTICE

Do not tow your vehicle with the rear wheels directly on the ground (and the transmission in neutral). If you do, the transmission will be damaged fatally.

NOTICE

Observe the following instructions when towing your vehicle.

- **To help avoid damage to your vehicle during towing, proper equipment and towing procedures must be used.**
- **Using the frame hook, tow your vehicle on paved roads for short distances at low speed.**

Before towing

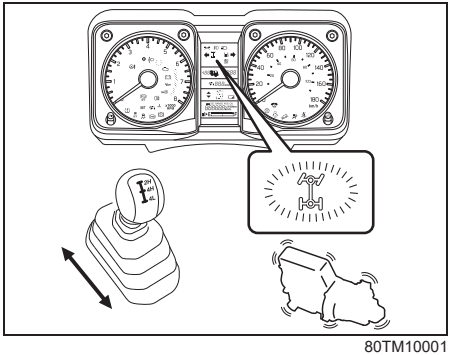

80TM10001

If you tow your vehicle with the front wheels on the ground, shift the transmission into Neutral and make sure the 4WD indicator on the instrument cluster comes on when you use the transfer lever to shift into 4-wheel drive high range position (“4H”) and goes off when you use the transfer lever to shift into 2-wheel high drive position (“2H”) with the engine running. If the 4WD indicator does not come on or it does not go off, that means, the air-locking hubs cannot be locked or unlocked, the vehicle must be towed with the front wheels lifted and the rear wheels on a dolly.

Towing a Disabled Vehicle

If your vehicle is disabled, and if the steering and drive train are in good condition (and the engine can be started for 4WD vehicles), the vehicle can be towed according to the instructions in this section. Your vehicle may also be towed by a tow truck with the front or rear wheels lifted, according to the instructions below.

Front wheels lifted (all models)

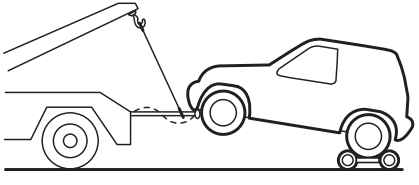

54G279

Front wheels lifted

Your vehicle may be towed by a tow truck with the front wheels lifted and a dolly under the rear wheels.

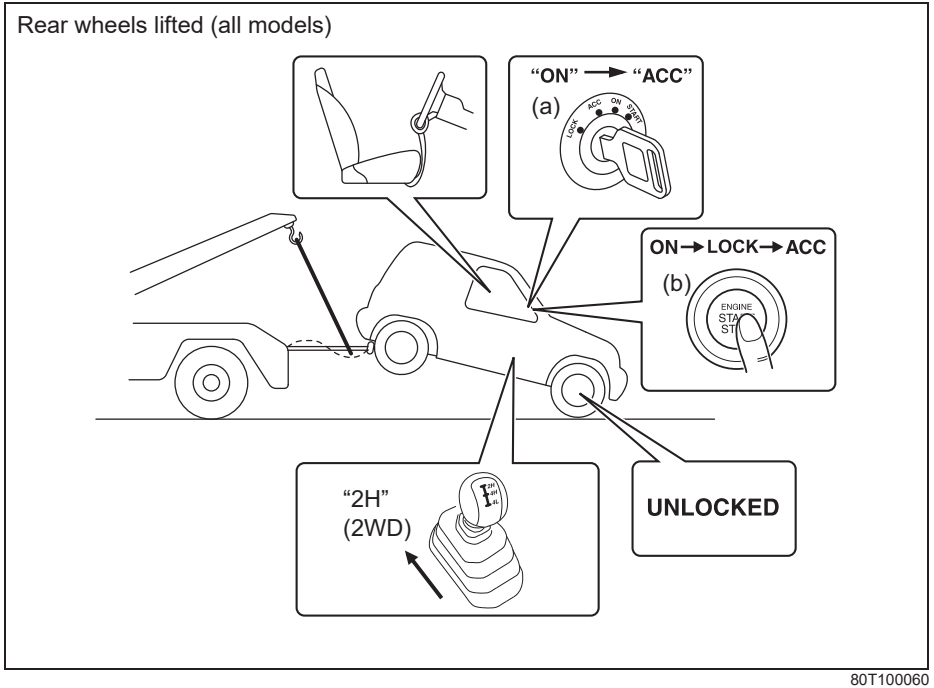

(a) Vehicle without keyless push start system
(b) Vehicle with keyless push start system

Rear wheels lifted

Your vehicle may be towed by a tow truck with the rear wheels lifted and the front wheels on the ground. Towing speed should not exceed 90 km/h (56 mph).

For this type of towing:

1) Shift the manual transmission to Neutral or the automatic transmission to "P" position and start the engine.
2) Shift the transfer lever to 2WD position ("2H").
3) Make sure the 4WD indicator on the instrument cluster is turned off.

NOTICE

If the air-locking hubs cannot be unlocked, tow the vehicle with the rear wheels lifted and a dolly under the front wheels.

4) Turn the ignition key to the "ACC" position or change the ignition mode to ACC to stop the engine and to unlock the steering wheel.

NOTICE

The steering column lock is not strong enough to withstand shocks transmitted from the front wheels during towing.

5) Make sure the front wheels are facing straight forward and secure the steering wheel with a steering wheel clamping device designed for towing service.

Jacking Instructions

1) Place the vehicle on level, hard ground.
2) Set the parking brake firmly and shift into “P” (Park) if your vehicle has an automatic transmission, or shift into “R” (Reverse) if your vehicle has a manual transmission.

⚠ WARNING

- **Be sure to shift into “P” (Park) for an automatic transmission vehicle, or into “R” (Reverse) for a manual transmission vehicle when you jack up the vehicle.**
- **Never jack up the vehicle with the transmission in “N” (Neutral). Otherwise, unstable jack may cause an accident.**

3) Turn on the hazard warning switch if your vehicle is near traffic.

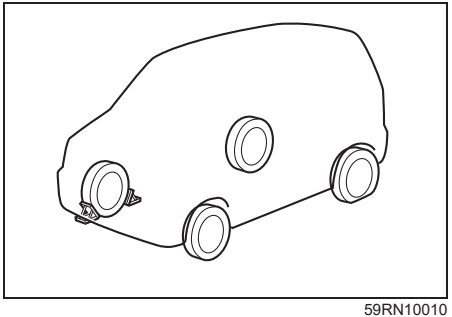

59RN10010

4) Block the front and rear of the wheel diagonally opposite to the wheel being lifted.

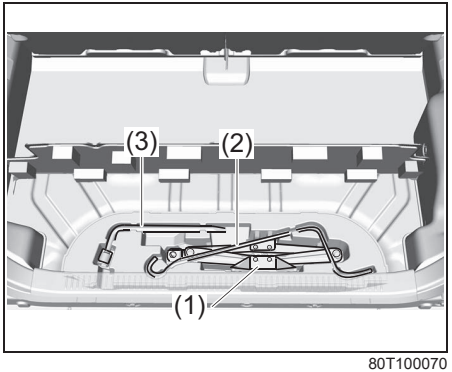

80T100070

5) Prepare the jack (1), jack handle (2) and wheel wrench (3).

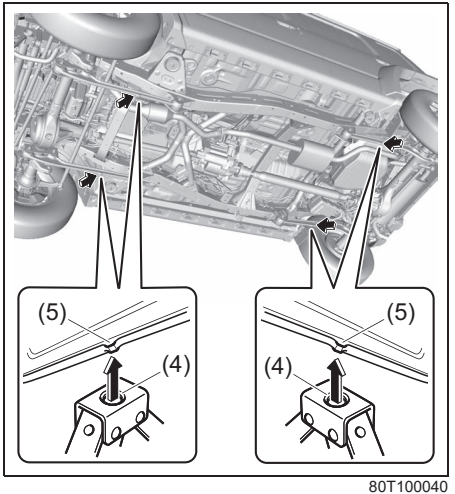

80T100040

6) Position the jack as shown in the illustration. Turn the jack handle mounting part clockwise by hand to unfold the jack and lightly contacts the jack-head hole (4) to the suspension arm boss (5) beneath the vehicle body.
7) Check that the jack-head hole (4) fits in the suspension arm boss (5) by shaking the jack-head lightly by hand.

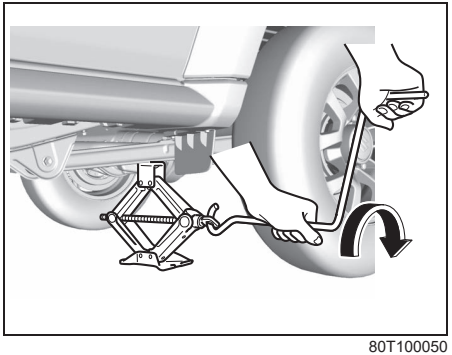

80T100050

8) Install the jack handle to the jack.
9) Turn the jack handle and carefully lift the vehicle until the tyre is slightly off the ground. Do not raise the vehicle more than necessary.

⚠ WARNING

- **Use the jack only to change wheels on level, hard ground.**
- **Never jack up the vehicle on an inclined surface.**
- **Never raise the vehicle with the jack in a location other than between the frame bosses near the wheel to be changed.**
- **Make sure that the jack is raised at least 25 mm before it contacts the boss. Use of the jack when it is within 25 mm of being fully collapsed may result in failure of the jack.**
- **Do not use wooden blocks or similar objects as a jack underlay.**
- **No person should place any portion of their body under a vehicle that is supported by a jack. Never place your hands or feet under the raised vehicle when it is supported by a jack.**
- **Never run the engine when the vehicle is supported by the jack and never allow passengers to remain in the vehicle.**

Raising Vehicle with Garage Jack

- Apply the garage jack to one of the points indicated below.
- Always support the raised vehicle with jack stands (commercially available) at the points indicated below.

(1) Front
(2) Jack stand
(3) Rear
(4) Garage jack
(5) Jacking point for garage jack

⚠ WARNING

As the vehicle may get damaged or an accident may occur, observe the following points.

- **Observe the designated points shown in the illustration.**
- **When holding the lifted vehicle, use the jack stand.**
- **When jacking up the front side or the rear side only, put a chock (commercially available) on front and back of the grounded tyre.**

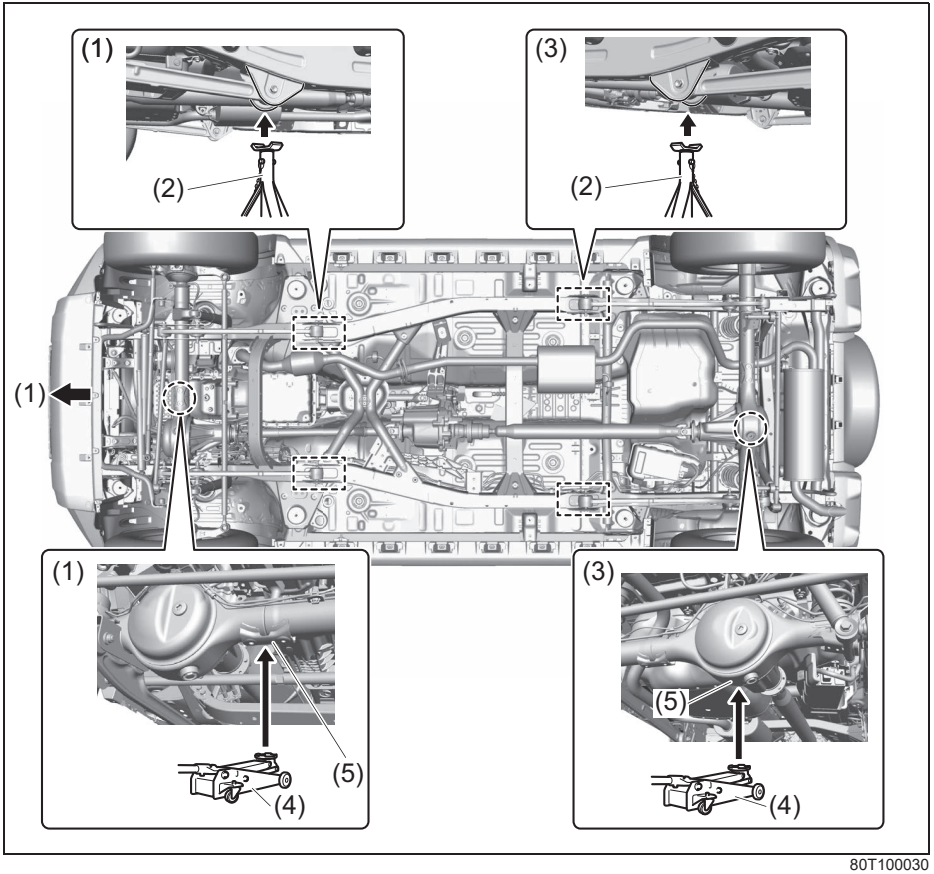

80T100030

Changing Wheels

⚠ WARNING

Never change a wheel in traffic lane. Always move the vehicle off the road on level, hard ground away from traffic for changing a wheel. For any further assistance contact your nearest Maruti Suzuki authorized workshop.

To change a wheel, use the following procedure:

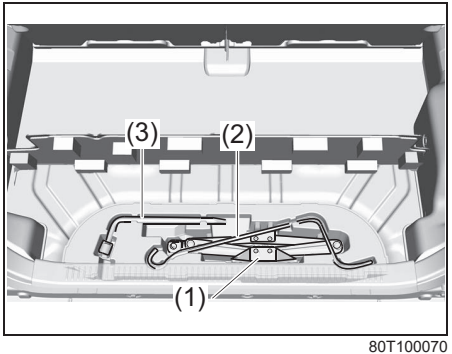

80T100070

1) Prepare the jack (1), jack handle (2), wheel wrench (3).

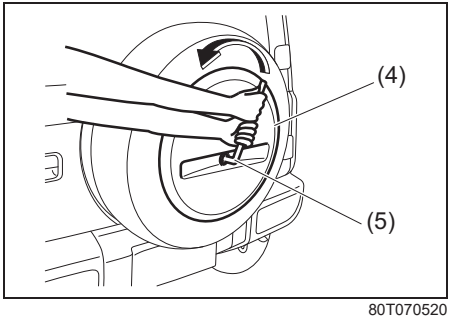

80T070520

2) Remove the spare wheel half cover (4).
   – Remove the center nut by turning it counterclockwise with the wheel wrench (5).

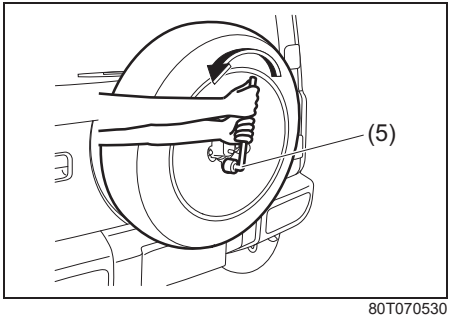

80T070530

3) Remove three wheel nuts of the spare wheel by turning them counterclockwise with the wheel wrench (5).

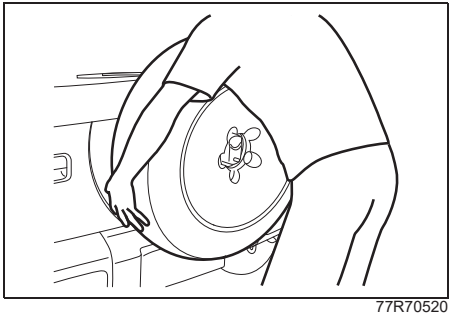

77R70520

4) Remove the spare wheel with both hands.

NOTICE

Carefully lower the spare wheel to the ground.

5) Loosen the wheel nuts, but do not remove them.
6) Jack up the vehicle (refer to the “Jacking Instructions” in this section).

⚠ WARNING

- **Shift into “P” (Park) for an automatic transmission, or into “R” (Reverse) for a manual transmission vehicle when you jack up the vehicle.**
- **Never jack up the vehicle with the transmission in “N” (Neutral). Otherwise, unstable jack may cause an accident.**

⚠ CAUTION

Immediately after the vehicle has been driven, the wheels, the wheel nuts and the area around the brakes might be extremely hot. Touching these areas may cause burn injury Do not touch these areas, immediately after the vehicle has been driven.

7) Remove the wheel nuts and wheel.

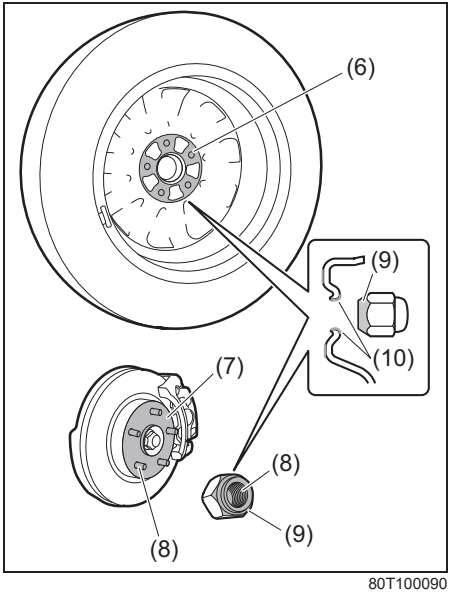

80T100090

8) Before installing the new wheel, clean any mud or dirt off from the surface of the wheel (6), hub (7), thread part (8), surface of the wheel nuts (9) and surface of the wheel holes (10) with a clean cloth. Clean the hub carefully; it may be hot from driving.
9) Install the new wheel and replace the wheel nuts. Tighten each nut snugly by hand until the wheel is securely seated on the hub.

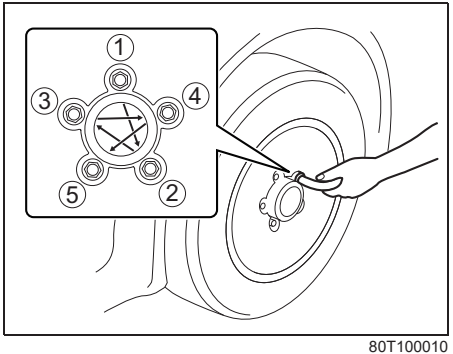

80T100010

Tightening torque for wheel nut: 100 Nm (10.0 kg-m, 72.3 lb-ft)

10) Lower the jack and fully tighten the nuts in a crisscross fashion with a wrench as shown in the illustration.

⚠ WARNING

Use genuine wheel nuts and tighten them to the specified torque as soon as possible after changing wheels. Incorrect wheel nuts or improperly tightened wheel nuts may come loose or fall off, which can result in an accident. If you do not have a torque wrench, have the wheel nut torque checked by a Maruti Suzuki authorized workshop.

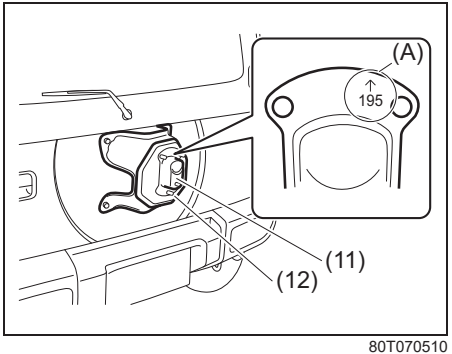

80T070510

11) Check the direction of the bracket (11) attached to the spare wheel carrier (12).
  – The “195” mark (A) should be facing up.

NOTE:
If you install the bracket upside down, the center nut of the spare wheel half cover will not tighten securely.

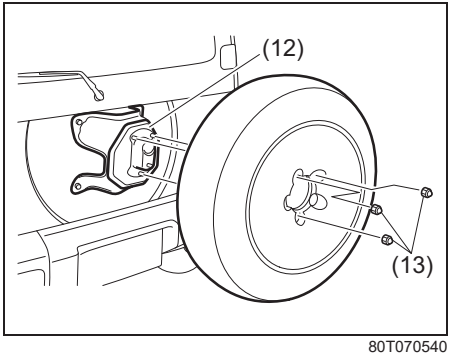

80T070540

12) Install the spare wheel to the spare wheel carrier (12).
  – Hold the spare wheel firmly in both hands and align the bolts of the spare wheel carrier (12) with the wheel holes (three locations).
13) Tighten the wheel nuts (13) evenly and securely with the wheel wrench.
14) Check that the wheel nuts (13) are securely tighten.

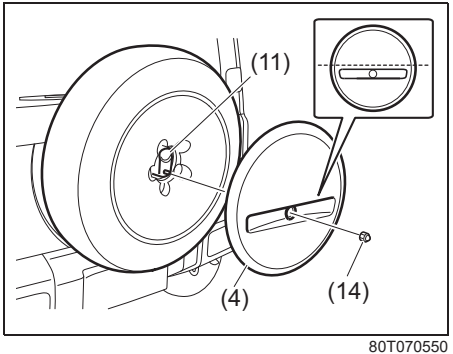

80T070550

15) Install the spare wheel half cover (4).
  – Align the hole of the spare wheel half cover with the bolt of the bracket (11) so that the hole of the cover is positioned below the center of the spare wheel half cover as shown in the illustration.
  – Tighten the center nut (14) securely with the wheel wrench.

NOTICE
Do not tighten the nut more than necessary. The spare wheel half cover may be damaged.

Jump-starting Instructions

⚠ WARNING

- **Never attempt to jump-start your vehicle if the lead-acid battery appears to be frozen. Batteries in this condition may explode.**
- **When making jump lead connections, check that your hands and the jump leads remain clear from pulleys, belts or fans.**
- **Lead-acid batteries produce flammable hydrogen gas. Keep flames and sparks away from the battery or an explosion may occur. Never smoke when working near the battery.**
- **If the booster battery you use for jump-starting is installed in another vehicle, check that the two vehicles are not touching each other.**
- **If your lead-acid battery discharges repeatedly, for no apparent reason, have your vehicle inspected by a Maruti Suzuki authorized workshop.**
- **To avoid harm to yourself or damage to your vehicle or battery, follow the jump-starting instructions below.**
  If you are in doubt, call for qualified road service.

NOTICE

Your vehicle should not be started by pushing or towing. This starting method could result in permanent damage to the catalytic converter. Use jump leads to start a vehicle with a weak or flat battery.

1) Use only a 12-volt lead-acid battery to jump-start your vehicle. Position the good 12-volt lead-acid battery close to your vehicle so that the jump leads will reach both batteries. When using a battery installed on another vehicle, check that two vehicles do not touch each other. Set the parking brakes fully on both vehicles.
2) Turn off all vehicle accessories, except those necessary for safety reasons (for example, headlights or hazard lights).

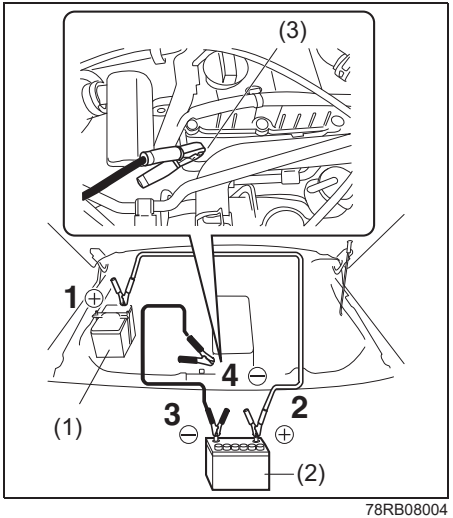

78RB08004

3) Connect jump leads as follows:
   1. Connect one end of the first jump lead to the positive (+) terminal of the discharged battery (1).
   2. Connect the other end to the positive (+) terminal of the booster battery (2).
   3. Connect one end of the second jump lead to the negative (–) terminal of the booster battery (2).
   4. Make the final connection to an unpainted, heavy metal part (3) of engine cylinder head in the vehicle with the discharged battery (1).

⚠ WARNING

Never connect the jump lead directly to the negative (–) terminal of the discharged battery, or an explosion may occur.

⚠ CAUTION

Connect the jump lead to the engine mount bolt securely. If the jump lead disconnects from the engine mount bolt because of vibration at the start of the engine, the jump lead could be caught in the drive belts.

4) If the booster battery you are using is fitted to another vehicle, start the engine of the vehicle with the booster battery. Run the engine at moderate speed.
5) Start the engine of the vehicle with the discharged battery.
6) Remove the jump leads in the exact reverse order in which you connected them.

Running Out of Battery

In the following cases, the lead-acid battery is running out.

- The starter does not engage when attempting to turn on the engine. Or, the starter rotation is too weak to make the engine start.
- The headlight illumination is extremely low or the horn volume is low.

If You Get a Flat Tyre While Driving

Firmly hold the steering wheel and carefully apply the brakes to slow down the vehicle and stop it in a safe place.

Engine Trouble: Starter Does not Operate

1) Try turning the ignition switch to “START” position or try pressing the engine switch to change the ignition mode to START with the headlights turned on to determine the lead-acid battery condition. If the headlights go excessively dim or go off, it usually means that either the lead-acid battery is discharged or the battery terminal contact is poor. Recharge the lead-acid battery or correct battery terminal contact as necessary.
2) If the headlights remain bright, check the fuses. If the reason for failure of the starter is not obvious, there may be a major electrical problem. Have the vehicle inspected by a Maruti Suzuki authorized workshop.

Engine Trouble: Does not Start

Make sure that your vehicle has enough fuel and battery.
If the engine does not start under very cold condition, press the accelerator pedal all the way to the floor and hold it while cranking the engine.
Refer to “Starting / Stopping Engine (Vehicle without Keyless Push Start System)” or “Starting / Stopping Engine (Vehicle with Keyless Push Start System)” in “OPERATING YOUR VEHICLE” section.
If the engine still does not start have your vehicle inspected by a Maruti Suzuki authorized workshop.

- Do not operate the starter motor for more than 12 seconds.

(Vehicle with keyless push start system)

NOTE:
If the engine refuses to start, the starter motor automatically stops after a certain period of time. After the starter motor has automatically stopped or if there is anything abnormal in the engine starting system, the starter motor runs only while the engine switch is held pressed.

Engine Trouble: Overheating

The engine could overheat temporarily under severe driving conditions. If the high engine coolant temperature warning light comes on as overheating during driving:

1) Turn off the air conditioner.
2) Take the vehicle to a safe place and park.
3) Run the engine at a normal idle speed for a few minutes until the high engine coolant temperature warning light goes off.

⚠ WARNING

If you see or hear escaping steam, stop the vehicle in a safe place and immediately turn off the engine to cool it. Do not open the hood when steam is present. When the steam can no longer be seen or heard, open the hood to see if the coolant is still boiling. If it is, you must wait until it stops boiling before you proceed.

If the high engine coolant temperature warning light does not go off:

1) Turn off the engine and check that the water pump belt and pulleys are not damaged or slipping. If any abnormality is found, correct it.
2) Check the coolant level in the reservoir. If it is found to be lower than “LOW” line, check radiator, water pump, radiator hoses and heater hoses for leakage. If leakage that may cause overheating is found, do not run the engine until these problems have been corrected.
3) If leakage is not found, carefully add coolant to the reservoir and then the radiator, if necessary. (Refer to “Engine Coolant” in “INSPECTION AND MAINTENANCE” section.)

NOTE:
If engine overheats and you are not sure what to do, consult with a Maruti Suzuki authorized workshop.

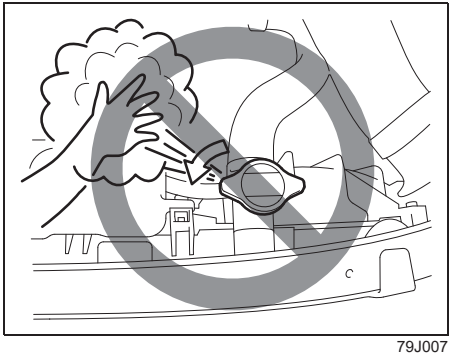

79J007

⚠ WARNING

- **It is hazardous to remove the radiator cap when the water temperature is high, because scalding fluid and steam may be blown out under pressure. The cap should only be taken off when the coolant temperature has lowered.**
- **To help prevent personal injury, keep hands, tools and clothing away from the engine cooling fan and air-conditioner fan. These electric fans can automatically turn on without warning.**

Warning Triangle

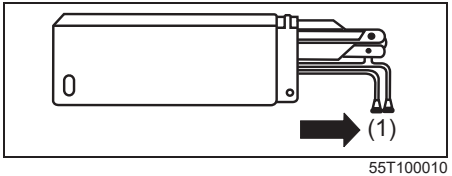

55T100010

In case of vehicle break-down or during emergency stopping, where, your vehicle could become a potential traffic hazard, keep the warning triangle, provided with your vehicle, on the road free from any obstacles behind your vehicle so as to warn the approaching traffic, at an approximate distance of 50–100 m (164–328 ft). The reflecting side of the triangle should face the oncoming traffic. Please activate the hazard warning lamps before alighting the vehicle to keep the warning triangle.

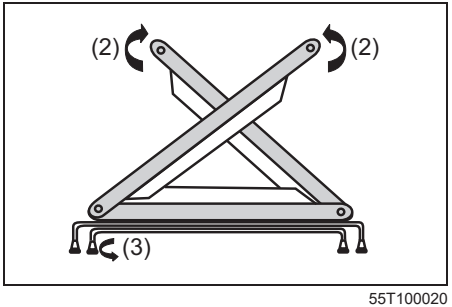

55T100020

- Remove the warning triangle carefully from the cover as shown by arrow (1).
- Open both the reflector arms as shown by arrow (2) and lock the arms with each other with the clip provided in the right arm. Open the bottom stand in counter clock-wise direction as shown by arrow (3). Position the warning triangle behind the vehicle on a plain surface.
- Reverse the removal procedure for keeping inside the cover.

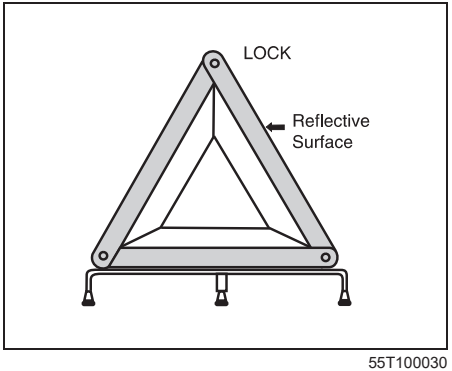

55T100030

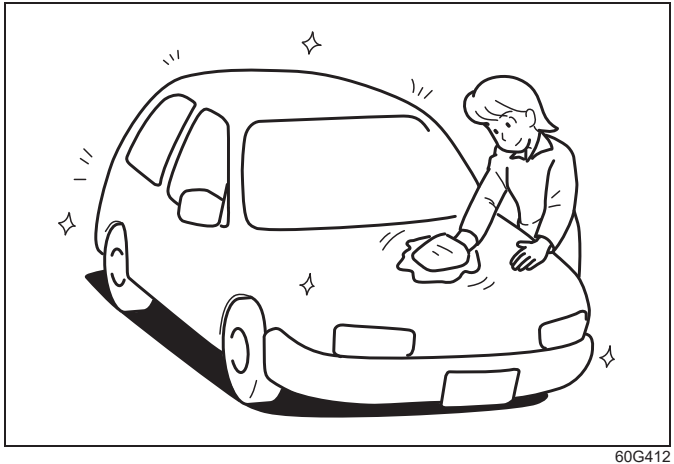

60G412

APPEARANCE CARE

Corrosion Prevention **11-1**
Cleaning Exterior **11-2**
Cleaning Interior **11-7**

Corrosion Prevention

It is important to take good care of your vehicle to protect it from corrosion. Listed below are instructions for how to maintain your vehicle to prevent corrosion. Please read and follow these instructions carefully.

Important Information about Corrosion

Common causes of corrosion

1) Accumulation of road salt, dirt, moisture or chemicals in hard-to-reach areas of the vehicle underbody or frame.
2) Chipping, scratches and any damage to treated or painted metal surfaces resulting from minor accidents or abrasion by stones and gravel.
3) Any or all of the below mentioned points:

- Continuous exposure to sunlight.
- Hard water & sea water coming in contact with vehicle.
- Foot rubbing (skirting).

Environmental conditions which accelerate corrosion

1) Road salt, dust control chemicals, sea breeze or industrial pollution will all accelerate the corrosion of metal.
2) High humidity will increase the rate of corrosion particularly when the temperature range is just above the freezing point.
3) Moisture in certain areas of a vehicle for an extended period of time may promote corrosion even when other body sections are completely dry.
4) High temperatures will cause an accelerated rate of corrosion to parts of the vehicle which are not well-ventilated to permit quick drying.

This information illustrates the necessity of keeping your vehicle (particularly the underbody) as clean and dry as possible. It is equally important to repair any damage to the paint or protective coatings as soon as possible.

How to Help Prevent Corrosion

⚠ WARNING

Do not apply additional undercoating or rust preventive coating on or around exhaust system components such as the catalytic converter and the exhaust pipes. It may catch a fire if the undercoating substance becomes overheated.

Wash your vehicle frequently

The best way to preserve the finish on your vehicle and to help avoid corrosion is to keep it clean with frequent washing.
Wash your vehicle at least once during the winter and once immediately after the winter. Keep your vehicle, particularly the underside, as clean and dry as possible.
If you frequently drive on salted roads, your vehicle should be washed at least once a month during the winter. If you live near the ocean, your vehicle should be washed at least once a month throughout the year.

For washing instructions, refer to “Cleaning Exterior” in this section.

Remove foreign material deposits

Foreign materials such as salts, chemicals, road oil or tar, tree sap, bird droppings and industrial fall-out may damage the finish of your vehicle if it is left on painted surfaces. Remove these types of deposits as quickly as possible. If these deposits are difficult to wash off, an additional cleaner may be required. Check that any cleaner you use is not harmful to painted surfaces and is specifically intended for your purposes. Follow the manufacturer’s directions when using these special cleaners.

Repair finish damage
Carefully examine your vehicle for damage to the painted surfaces. Should you find any chips or scratches in the paint, touch them up immediately to prevent corrosion from starting. If the chips or scratches have gone through to the bare metal, have a qualified body shop make the repair.

Keep passenger and luggage compartments clean
Moisture, dirt or mud can accumulate under the floor mats and may cause corrosion. Occasionally, check under these mats to ensure that this area is clean and dry. More frequent checks are necessary if the vehicle is used for off-road driving or in wet weather.
Certain cargos such as chemicals, fertilizers, cleaners, salts, etc. are extremely corrosive by nature. These products should be transported in sealed containers. If they are spilled or leaked, clean and dry the area immediately.

Park your vehicle in a dry, well-ventilated area
Park your vehicle to save it from continuous exposure to direct sunlight. Do not park your vehicle in a damp, poorly-ventilated area. If you often wash your vehicle in the garage and place it there in wet condition, your garage may be damp. The high humidity in the garage may cause or accelerate corrosion. A wet vehicle may corrode even in a heated garage if the ventilation is poor.

Use mud and gravel shields
Use mud and gravel shields
The use of mud and gravel shields will help protect your vehicle, especially if you frequently drive on gravel or salted roads. Full-size shields, which extend as close to the road as is practical, are the best. The fittings for such shields should also be corrosion resistant. Please check with your Maruti Suzuki authorized workshop for information on these shields.

Cleaning Exterior

For Keeping the Paintwork Beautiful

To keep your vehicle's beautiful appearance for a long term, daily care is important.

- For parking and storing the vehicle, we recommend garages with good ventilation and locations with roofs.
- The following situations may cause rusting and discoloration of the paint. Wash your vehicle promptly.
  - When driving in coastal areas or on roads sprayed with antifreeze agent (Wash the underside of the vehicle and around the wheel wells especially)
  - When bird droppings, dead insects, sap, iron dust, soot or smoke residue, coal tar, etc., adhere to the paint or when the vehicle gets wet with acid rain
  - When the vehicle is dirty with dust or mud
- Give the vehicle a wax about once a month or whenever the water-repelling ability of the painted surfaces has declined. Follow all instructions on the package of the wax (sold separately).

NOTE:
Do not use wax on plastic parts that are not coated. Waxing these surfaces could result in a whitened or uneven appearance.

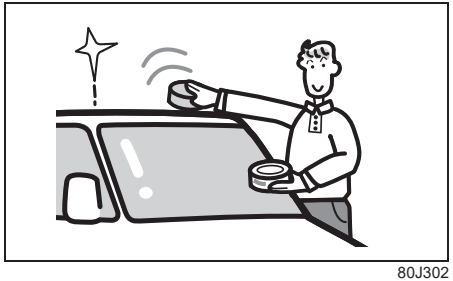

80J302

- Chips from flying rocks, scratches, etc. can cause rust. Repair these areas as soon as possible.

NOTICE

- **When repairing scratches on painted surfaces, consult with a Maruti Suzuki authorized workshop. Using an inappropriate material for repair could cause damage to the paint.**
- **It is important that your vehicle be kept clean and free from dirt. Failure to keep your vehicle clean may result in fading of the paint or corrosion to various parts of the vehicle body.**

Washing

⚠ WARNING

- **Never attempt to wash and wax your vehicle with the engine running.**
- **When cleaning the underside of the body and fender, where there may be sharp-edged parts, wear gloves and a long-sleeved shirt to protect your hands and arms from being cut.**
- **After washing your vehicle, carefully test the brakes before driving to check that they have maintained their normal effectiveness.**

NOTICE

84S09240

- **When washing or waxing the vehicle, do not lean on the vehicle body or do not push it hard.**
  This might cause it to deform.

(Continued)

NOTICE

(Continued)

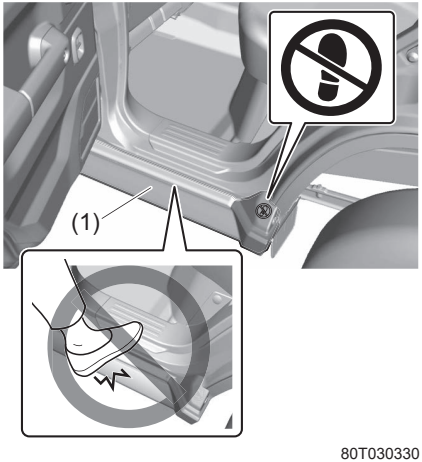

80T030330

- **When washing or waxing the vehicle, do not put your foot on the side sill splash guard (1).**
  This might cause it to damage.

Washing by hand

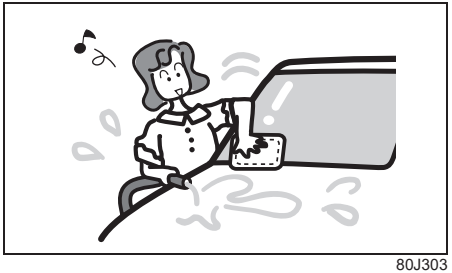

80J303

When washing the vehicle, park it in the place where direct sunlight does not fall on it as much as possible and follow the instructions below:

1) Flush the underside of body and wheel housings with pressurized water to remove mud and debris. Use plenty of water.

NOTICE

When washing the vehicle:
- **Avoid directing steam or hot water of more than 80°C (176°F) on plastic parts.**
- **Getting water or other liquids into the engine components may cause an engine starting problem or an electrical components to fail.**
  To avoid damaging engine components, do not spray the engine components with water or other liquids.

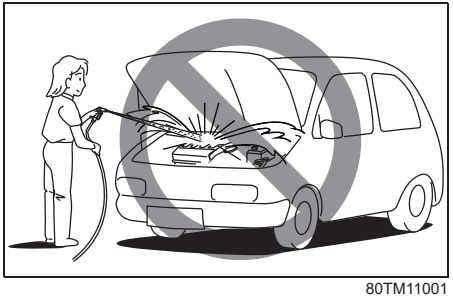

80TM11001

2) Rinse the body to loosen the dirt. Remove dirt and mud from the body exterior with running water. You may use a soft sponge or brush. Do not use hard materials which can scratch the paint or plastic. Remember that the headlight covers or lenses are made of plastic in many cases.

NOTICE

To avoid damage to the paint or plastic surface, do not wipe the dirt off without ample water. Follow the above procedure.

3) Wash the entire exterior with a mild detergent or car wash soap using a sponge or soft cloth. The sponge or cloth should be frequently soaked in the soap solution.

NOTICE

When using a commercial car wash product, observe the cautions specified by the manufacturer. Never use strong household detergents or soaps.

4) Once the dirt has been completely removed, rinse off the detergent with running water.
5) Wipe off the vehicle body with a wet chamois or cloth and allow it to dry in the shade.
6) Check carefully for damage to painted surfaces. If there is any damage, touch up the damage following the procedure below:
   1. Clean all damaged spots and allow them to dry.
   2. Stir the paint and touch up the damaged spots lightly using a small brush.
   3. Allow the paint to dry completely.

Washing by an automatic car wash

NOTICE

If you use an automatic car wash, check that your vehicle's body parts, such as antenna, cannot be damaged. If you are in doubt, consult the car wash operator for advice.

Washing by a high-pressure cleaner

NOTICE

If you use a high-pressure cleaner, keep away the nozzle from your vehicle sufficiently.

- **Pointing the nozzle to the surrounding parts of camera can allow water to enter the camera.**
  This may cause a fire, malfunction, dew condensation, etc.
- **For vehicle with rear view camera, do not point to the nozzle to the camera.**
- **Bringing the nozzle to your vehicle too close or pointing the nozzle to the opening of front grill or bumper etc. can cause damage and malfunction of the vehicle body and parts.**
- **Pointing the nozzle to door glasses and door frames can allow water to enter the cabin.**

Caring for the Windshield

If an oil film, etc. adheres to the windshield and the windshield wipers cannot clean it, use a glass cleaner (sold separately) to clean the windshield by hand.

Caring for Lights

Wash the lens part of light and wipe it off with a soft cloth.

NOTICE

- **Do not use the detergent including organic solvent on the lens surface of the light. The lens surface may be cracked.**
  If you use the detergent including organic solvent, rinse it off with ample water.
- **Do not wipe the lens surface by wax or a hard brush. This may damage the lens or hasten its deterioration.**

Caring for Cameras

Wash the lens part of camera and wipe it off with a soft cloth. If the lens part is very dirty, use a mild detergent.

NOTICE

- **Using alcohol, benzine, thinner etc. to wipe the camera may cause discoloration.**
  When you wipe the camera, do not use alcohol, benzine, thinner etc.
- **Hard coating is used for the lens of camera not to be easily scratched. However, if you use the brush for a vehicle, it may be difficult for you to see the image on the camera.**
  Be very careful not to scratch the lens.
- **The resin cover of the camera may be damaged if an organic solvent adheres to the camera.**
  Do not let organic solvent, body wax, oil film remover, or glass coating agent adhere to the product.
- **If the camera is subjected to a sudden temperature change, it may be damaged.**
  Do not expose the camera to sudden temperature changes such as melting frozen snow with hot water.

Caring for Aluminum Wheels

NOTE:

- *Do not use an acidic or alkaline detergent, or a cleaner containing petroleum solvent to wash aluminum wheels. These types of cleaners will cause permanent spots, discoloration and cracks on the finished surface and damage to the center cap.*
- *Do not use a bristle brush and a soap containing an abrasive material. These will damage the finished surface.*

Waxing

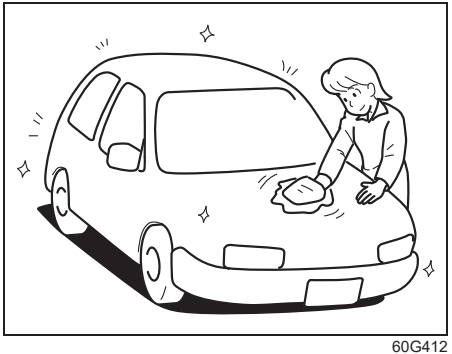

60G412

After washing the vehicle, waxing and polishing are recommended to further protect and beautify the paint.

- Only use waxes and polishes of good quality.
- When using waxes and polishes, observe the precautions specified by the manufacturers.

Cleaning Interior

- Clean out any dirt, sand, etc. using a vacuum cleaner, or wipe off the surfaces using a soft cloth moistened with cold or lukewarm water. If the interior is left dirty, scratches can occur.
- Quickly clean off any liquids such as those from air fresheners or spilled beverages by using tissue paper or a soft cloth. Leaving spilled liquids can cause staining, discoloration or cracking.

⚠ WARNING

- **Do not spray the interior with water or other liquids. If the navigation equipment, audio components, switches, wiring under the floor, or other electrical parts become wet, there is a risk of fire or malfunction, and the SRS airbag system could fail to function normally.**
  If you pour water or spill a drink in the vehicle, consult with a Maruti Suzuki authorized workshop as soon as possible for inspection.

NOTICE

- **Do not use chemical products containing the following ingredients. Doing so may cause staining, discoloration, deformation, or a deterioration in strength, etc.**
  - **Solvents such as benzine, gasoline, thinner, or sticker peeling agents**
  - **Acidic or alkaline detergents**
  - **Bleaches or dyes**
- **Do not use chemical products that include silicone for cleaning the areas around the air conditioner, electronic equipment such as the audio or navigation systems or switches. Contact with silicone may cause them to malfunction.**
- **Do not leave colored leather goods, furs, vinyl articles, etc. in your vehicle for long periods. Doing so could cause discoloration or deformation of the interior.**

NOTE:
To prevent liquid-based air fresheners from spilling, it is recommended to fix their containers in place, or use solid-type air fresheners instead.

Vinyl Upholstery

Prepare a solution of soap or mild detergent dissolved in warm water. Apply the solution to the vinyl with a sponge or soft cloth and let it soak for a few minutes to loosen dirt.
Rub the surface with a clean, damp cloth to remove dirt and the soap solution. If some dirt still remains on the surface, repeat this procedure.

Fabric Upholstery

Remove loose dirt with a vacuum cleaner. Using a mild soap solution, rub stained areas with a clean damp cloth. To remove soap, rub the areas again with a cloth dampened with water. Repeat this until the stain is removed, or use a commercial fabric cleaner for tougher stains. If you use a fabric cleaner, carefully follow the manufacturer's instructions and precautions.

Leather Upholstery

Remove loose dirt with a vacuum cleaner. Using a mild soap or saddle soap solution, wipe dirt off with a clean damp soft cloth. To remove soap, wipe the areas again with a soft cloth dampened with water. Wipe the areas dry with a soft dry cloth. Repeat this until the dirt or stain is removed, or use a commercial leather cleaner for tougher dirt or stains. If you use a leather cleaner, carefully follow the manufacturer's instructions and precautions. Do not use solvent type cleaners or abrasive cleaners.

NOTE:
- *In order to keep the leather upholstery looking good, it should be cleaned at least twice a year.*
- *If the leather upholstery becomes wet, immediately wipe it dry with a tissue paper or a soft cloth. Water may cause the leather to harden and shrink if it is not wiped off.*
- *When parking on sunny days, select a shady place or use a sunshade. If the leather upholstery is exposed to the direct sunlight for a long time, it may discolor and shrink.*
- *As is common with natural materials, leather is inherently irregular in grain and cowhide has spots in its natural state. These do not affect the performance of the leather in any way.*

Seat Belts

Clean seat belts with mild soap and water. Do not use bleach or dye on the belts. They may weaken the fabric of the belts.

Vinyl Floor Mats

Ordinary dirt can be removed from vinyl with water or the mild soap. Use a brush to help loosen dirt. After the dirt is loosened, rinse the mat thoroughly with water and dry it in the shade.

Carpets

Remove the dirt and soil as much as possible with a vacuum cleaner. Using a mild soap solution, rub stained areas with a clean damp cloth. To remove soap, rub the areas again with a cloth dampened with water. Repeat this until the stain is removed, or use a commercial carpet cleaner for tougher stains. If you use a carpet cleaner, carefully follow the manufacturer's instructions and precautions.

Instrument Panel and Console

Remove loose dirt with a vacuum cleaner. Gently wipe dirt off with a tightly squeezed damp clean cloth. Repeat this until the dirt is removed.

⚠ WARNING

Do not use chemical products that contain silicon to wipe electrical components such as the air conditioning system, audio, navigation system, or other switches. These will cause damage to the components. Do not spray water or any liquid directly on instrument cluster or any other electrical or electronic components. This may cause damage and/or lead to non-functioning of the part or may cause fire.

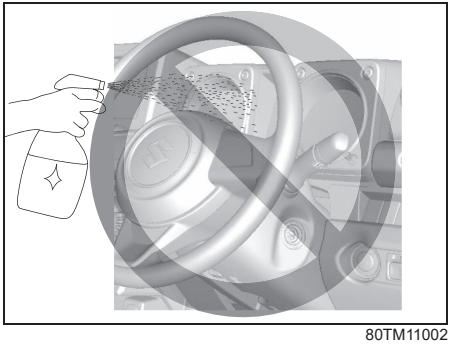

80TM11002

Inside of the Tailgate Window

NOTE:
Wipe the window along the antenna wires or heat wires by a soft cloth dampened with water to avoid damaging these wires.

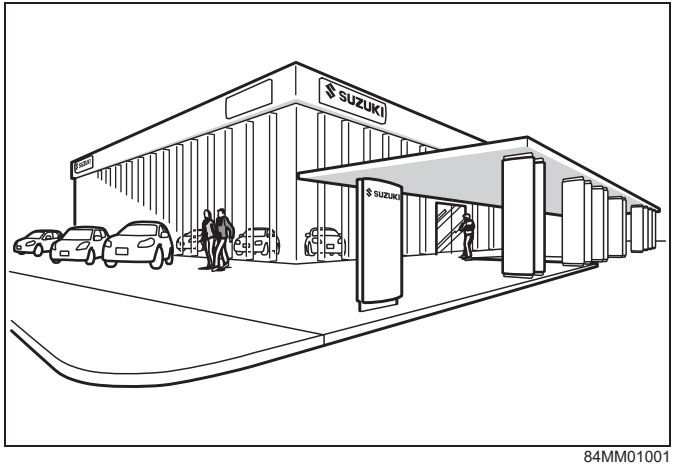

84MM01001

SPECIFICATIONS

Vehicle Identification 12-1
FASTag (if equipped) 12-2
High Security Registration Plate (HSRP) (if applicable) .. 12-3
Fuel Recommendation 12-4
Specifications 12-5

Vehicle Identification

Chassis Serial Number

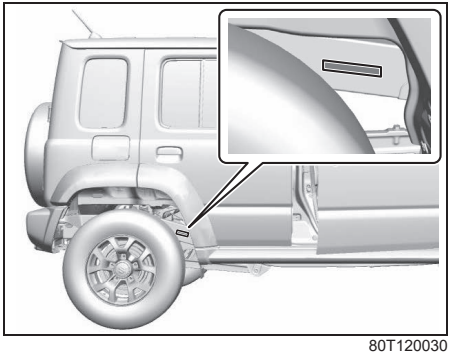

80T120030

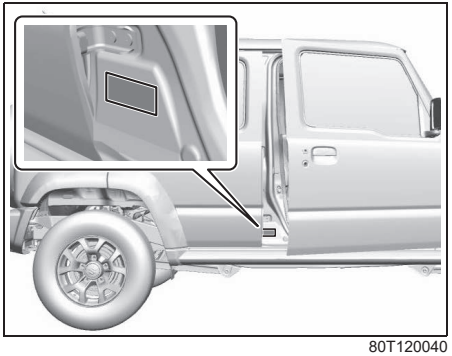

80T120040

The chassis and/or engine serial numbers are used to register the vehicle. They are also used to assist a Maruti Suzuki authorized workshop when ordering or referring to special service information. Whenever you have occasion to consult a Maruti Suzuki authorized workshop, remember to identify your vehicle with this number. Should you find the number difficult to read, you will also find it on the identification plate.

Engine Serial Number

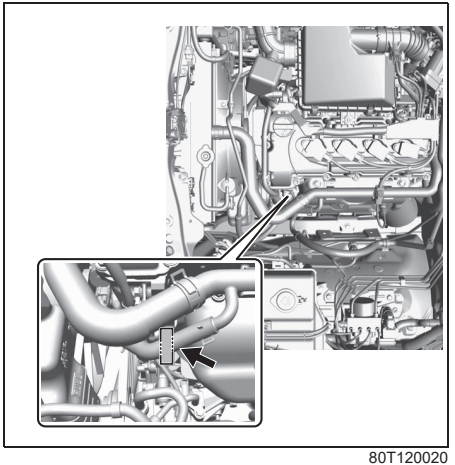

80T120020

The engine serial number is stamped on the cylinder block as shown in the illustration.

FASTag (if equipped)

As per Ministry of Road Transport and Highways, the FASTag (1) is mandatory for each vehicle for the purpose of electronic toll collection or any other purpose as may be defined by the Government of India.

In case of any damage to FASTag or replacement of front windscreen, please contact your nearest Maruti Suzuki authorized workshop.

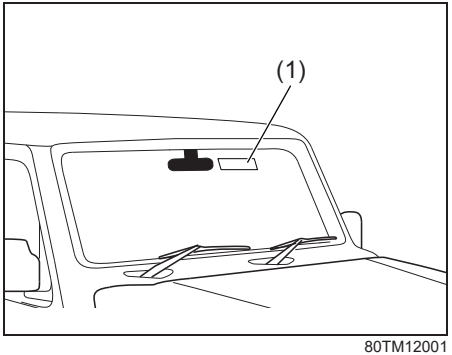

80TM12001

As seen from inside of the vehicle

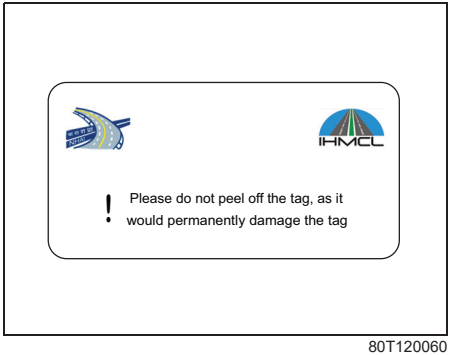

80T120060

NOTE:
The picture shown is for indicative purpose only. Internal structure of actual device mounted on vehicle may be different.

As seen from outside of the vehicle

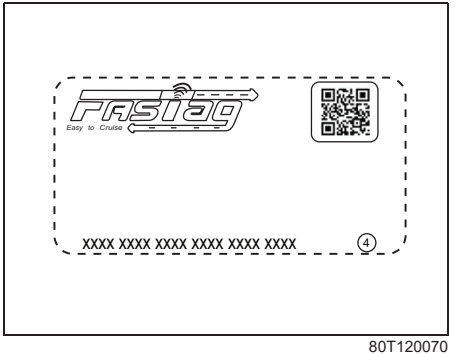

80T120070

NOTE:
The picture shown is for indicative purpose only. Internal structure of actual device mounted on vehicle may be different.

NOTE:
- *Any attempt to remove the tag from the windscreen will result in permanent damage to the tag.*
- *Use of chemical cleaners to clean the windscreen area where the tag is mounted can damage the tag.*
- *Use of any sharp objects on the tag can damage the tag.*

High Security Registration Plate (HSRP) (if applicable)

As per Ministry of Road Transport and Highways, every new vehicle must have HSRP.
HSRP contains;
• Front and rear HSRP, which will be fitted with 2 snap-locks each on number plate area.
• Third license plate on front windshield.

Third License Plate

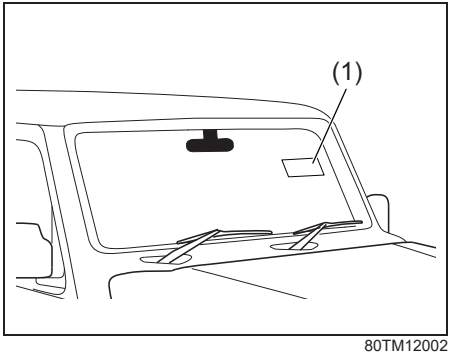

80TM12002

(1) Third license plate

Third license plate - As seen from outside of the vehicle

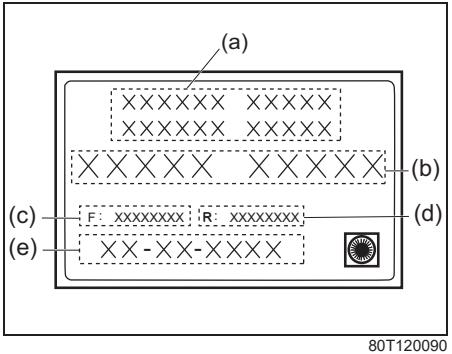

80T120090

(a) HSRP issuing authority name
(b) Vehicle registration number
(c) Unique laser number - Front plate
(d) Unique laser number - Rear plate
(e) Date of 1st registration
(in DD-MM-YYYY format)
(f) Green strips (BS6 vehicle)

NOTE:
The picture shown is for indicative purpose only. Internal structure of actual label mounted on vehicle may be different.

NOTE:
• Any attempt to remove the third license plate from the windscreen will result in permanent damage to the label.
• Use of chemical cleaners to clean the windscreen area where the label is mounted can damage the same.
• Use of any sharp objects on the label can damage the label.
• In the event of any replacement of the third license plate, may please contact the approved authority.

Third license plate - As seen from inside of the vehicle

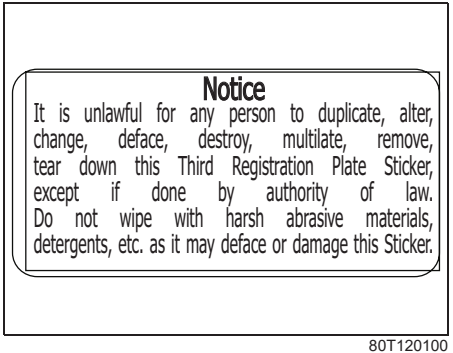

80T120100

NOTE:
The picture shown is for indicative purpose only.

NOTE:
Color of third license plate (back) is as per HSRP regulation as defined by Ministry of Road Transport and highways.

Fuel Recommendation

Petrol Engine

To avoid damaging catalytic converter, you must use unleaded petrol with an octane number (RON) of 91 or higher.

Gasoline/Ethanol blends
Blends of unleaded gasoline and ethanol, also known as gasohol, are commercially available in the country and can vary with location. Gasoline Ethanol blend up to E20 can be used as fuel for this vehicle.

Gasoline containing MTBE
Unleaded gasoline containing MTBE (methyl tertiary butyl ether) may be used in your vehicle if the MTBE content is not greater than 15%. This oxygenated fuel does not contain alcohol.

⚠ CAUTION

Use of spurious, low quality, adulterated fuel can cause damage to the engine and engine auxilliaries, affect functioning of engine and degrade engine performance including but not limited to engine seizure.

NOTICE

- **The fuel tank has an air space to allow for fuel expansion in hot weather. If you continue to add fuel after the filler nozzle has automatically shut off or an initial blowback occurs, the air chamber will become full. Exposure to heat when fully fuelled in this manner will result in leakage due to fuel expansion. To prevent such fuel leakage, stop filling after the filler nozzle has automatically shut off, or when initial vent blowback occurs, if using an alternative non-automatic system.**
- **Be careful not to spill fuel containing alcohol while refueling. If fuel is spilled on the vehicle body, wipe it up immediately. Fuels containing alcohol can cause paint damage, which is not covered under the New Vehicle Limited Warranty.**

Specifications

NOTE:
Specifications are subject to change without notice.

M/T: Manual transmission A/T: Automatic transmission

ITEM: Dimensions		UNIT: mm
Overall length		3820 (Front bumper to rear bumper) 3865 (Front bumper to spare tyre) 3985 (Front bumper to spare wheel half cover)
Overall width		1645
Overall height		1720
Wheelbase		2590
Track	Front	1395
	Rear	1405

ITEM: Mass (weight)		UNIT: kg
Curb mass (weight)	M/T	1195–1200
	A/T	1205–1210
Gross vehicle mass (weight) rating		1545
Permissible maximum Axle Weight	Front	765
	Rear	880

ITEM: Engine	
Type	K15B
Number of cylinders	4
Bore	74.0 mm
Stroke	85.0 mm
Piston displacement	1462 cm^3
Compression ratio	10.0: 1

ITEM: Electrical	
Standard spark plug	NGK KR6A-10
Battery	12V ISS N55*1 20HR 45AH CCA 480A(JIS)
Fuses	See “INSPECTION AND MAINTENANCE” section

*1: Your vehicle is equipped with a lead-acid battery for exclusive use of the ENG A-STOP system.
When replacing the lead-acid battery, make sure to select the specified type for ENG A-STOP system. Consult with a Maruti Suzuki authorized workshop for replacing the lead-acid battery.

ITEM: Recommended fuel / lubricants and capacities (approx.)			
Fuel		See “FUEL RECOMMENDATION” section	40 L
Engine oil		Classification: API SN or SP ILSAC GF–6 Viscosity: SAE 0W–16	3.6 L (replacement with oil filter)
Manual transmission oil		MARUTI GENUINE GEAR OIL 75W	1.2 L
Automatic transmission oil		SUZUKI ATF 3317 or Mobil ATF3309	5.7 L
Differential oil	Front	SUZUKI SUPER GEAR OIL 75W-85 SYNTHETIC	1.6 L
	Rear		1.3 L
Transfer oil		SUZUKI GEAR OIL 75W	1.21 L

ITEM: Recommended fluid and capacities (approx.)				
Engine coolant	SUZUKI LLC: Super (Blue) Coolant	Vehicle equipped with T.RAD radiator #1		4.8 L (including reservoir tank)
		Vehicle equipped with MAHLE radiator #1	M/T	5.0 L (including reservoir tank)
			A/T	4.8 L (including reservoir tank)
Brake fluid / Clutch fluid	MARUTI GENUINE BRAKE FLUID (MGBF) or DOT 3.	Refill to the proper oil level according to the instructions in “INSPECTION AND MAINTENANCE” section.		
Windshield washer fluid	–	4.0 L		

#1: The name of the radiator manufacturer can be identified by the label affixed to the top of the radiator or the side of the fan cover.
If the manufacturer of the vehicle's radiator is not identified, consult with a Maruti Suzuki authorized workshop.

ITEM: Wheels and tyres		
Tyre size, front and rear	195/80R15 96S*1	
Rim size	with steel wheels	15X5 1/2J
	with aluminum wheels	15X5 1/2J
Tyre pressures	For the specified tyre pressure, see the tyre information label located on the driver's door lock pillar.	
Recommended snow chain	Radial thickness: 20 mm, axial thickness: 20mm	
Recommended snow tyre	195/80R15*2	

*1 If you cannot prepare tyres with the specified load index rate and speed symbol, prepare tyres with higher load index rate and speed symbol.
*2 If you prepare snow tyres;
- Check that they are tyres of the same size, structure and load capacity as the originally installed tyres.
- Mount the snow tyres on all four wheels.
- Understand that the maximum permissible speed of snow tyres is generally less than the originally installed tyres.

Consult with a Maruti Suzuki authorized workshop for further information.

ITEM: Lights		WATTAGE	BULB No.
Interior light	Front	12V 10W	C10W
	Center	12V 10W	C10W
	Luggage compartment	12V 5W	W5W

- If you need to replace the following bulbs indicated in the above table, consult with a Maruti Suzuki authorized workshop.

*1 Since the lights are non-disassemble type, you cannot replace a bulb. Replace the target assembly if any light is defective.

- **MARUTI SUZUKI AUTHORISED DEALER WORKSHOP : SALES, SERVICE, WARRANTY & SPARE PARTS**
- **MARUTI SUZUKI NEXA DEALER WORKSHOP : SALES, SERVICE, WARRANTY & SPARE PARTS**
- **MARUTI SERVICE MASTER (MSM) : SERVICE, WARRANTY & SPARE PARTS**
- **MARUTI SERVICE ZONE (MSZ) : SERVICE, WARRANTY & SPARE PARTS**
- **MARUTI AUTHORISED SERVICE STATIONS (MASSs) : 'A' CATEGORY MASSs (**MARKED)**
  Free & paid Service, Major repairs & Accidental repairs
  'B' CATEGORY MASSs (* MARKED)
  Free & paid Service & Major repairs
  'C' CATEGORY MASSs (##MARKED)
  Free & paid Service & Minor repairs
  'D' CATEGORY MASSs (#MARKED)
  Free Service & Minor repairs

NOTE:
Certain MASSs are not authorised to undertake Warranty jobs. Customers are requested to approach only Maruti Suzuki Authorised Dealer Workshop / Maruti Suzuki Nexa Dealer Workshop / Maruti Service Master / Maruti Service Zone for Warranty jobs.

The charges and services may vary depending upon service network and location.

For latest Service Network details kindly visit **www.marutisuzuki.com** or contact our regional office / area office as mentioned below.

REGIONAL OFFICE	AREA COVERED
REGIONAL OFFICE (NORTH-I) MARUTI SUZUKI INDIA LIMITED 2nd FLOOR, 157 DIVINE , RAJPUR ROAD, DEHRADUN, UTTARAKHAND - 248001 PH:- 0135-2738549	UTTARAKHAND AND PART OF U.P.
REGIONAL OFFICE (NORTH-II) MARUTI SUZUKI INDIA LIMITED SCO: 39-40, SECTOR 8C, MADHYA MARG, CHANDIGARH - 160009 PH. NO.- 0172-2780056	PUNJAB, CHANDIGARH, PANCHKULA, ZIRAKPUR, MOHALI, JAMMU AND KASHMIR & LADAKH
REGIONAL OFFICE (NORTH-III) MARUTI SUZUKI INDIA LIMITED 4TH FLOOR, SUMMIT, PLOT NO. TCG 3/3, VIBHUTI KHAND, GOMTI NAGAR – LUCKNOW - 226010	PART OF U.P.
REGIONAL OFFICE (NORTH-IV) MARUTI SUZUKI INDIA LIMITED S.C.O. 81, FIRST FLOOR, SECTOR 5, PANCHKULA (HARYANA)-134109 PH : (0172) 2590056, 2580056	PART OF HARYANA AND HIMACHAL PRADESH
REGIONAL OFFICE (EAST-I) MARUTI SUZUKI INDIA LIMITED PLOT NO IID/15, ACTION AREA IID, NEW TOWN KOLKATA-700156	WEST BENGAL, SIKKIM, ANDAMAN & NICOBAR
REGIONAL OFFICE (EAST-II) MARUTI SUZUKI INDIA LIMITED 4TH FLOOR, ROHINI, OPP. HOTEL APSARA, 56, CIRCULAR ROAD, LALPUR RANCHI - 834001, JHARKHAND PH.: - 0651-2563931/61	BIHAR, JHARKHAND
REGIONAL OFFICE (EAST-III) MARUTI SUZUKI INDIA LIMITED 5A, 5TH FLOOR, PEACE ENCLAVE 724, ULUBARI, G.S.ROAD, GUWAHATI-781007 (ASSAM) TELE: 0361-2734308/10/11/12	ARUNACHAL PRADESH, ASSAM, MANIPUR, MEGHALYA, MIZORAM, NAGALAND, TRIPURA

SERVICE NETWORK (AS ON 31.01.2026)

REGIONAL OFFICE (WEST-I) MARUTI SUZUKI INDIA LIMITED Plot No-GEN 25 + 25 B/2,TTC INDUSTRIAL AREA,PAWANE VILLAGE,THANE BELAPUR ROAD,NAVI MUMBAI- 400705 PH NO-022 45042300	PART OF MAHARASHTRA AND GOA
REGIONAL OFFICE (WEST-II) MARUTI SUZUKI INDIA LIMITED SACRED WORLD, 7TH FLOOR, NORTH BLOCK, UNIT NUMBER 708-715; JAGTAP CHOWK, WANAWADI, PUNE – 411 040 (MAHARASHTRA) PH. (020) 26856037 / 38 / 39	PART OF MAHARASHTRA
REGIONAL OFFICE (WEST-III) MARUTI SUZUKI INDIA LIMITED 211-213, 2ND FLOOR, ISCON MALL, ABOVE STAR INDIA BAZAR, SATELLITE, AHMEDABAD - 380015 PH NO - 079 – 40036660	GUJARAT, DADRA & NAGAR HAVELI, DAMAN AND DIU
REGIONAL OFFICE (SOUTH-I) MARUTI SUZUKI INDIA LIMITED 10th Floor, Block A, Global Infocity Park, No.40, Anna Nedunchalai, Kandanchavadi, Perungudi, Chennai, Tamil Nadu – 600096 PH. - 044 - 28233050 – 53	TAMILNADU AND PONDICHERY
REGIONAL OFFICE (SOUTH-II) MARUTI SUZUKI INDIA LIMITED #204, 2ND FLOOR, EMBASSY CLASSIC BUILDING,VITTAL MALLYA ROAD,BANGALORE- 560001, KARNATAKA. PH: (080) 41120018	KARNATAKA
REGIONAL OFFICE (SOUTH-III) MARUTI SUZUKI INDIA LIMITED 2ND FLOOR, TUTUS TOWERS, 32/1787 NH47- BYE PASS, PADIVATTOM, COCHIN- 682024	KERALA
REGIONAL OFFICE (SOUTH EAST-I) MARUTI SUZUKI INDIA LIMITD 101-102 FIRST FLOOR MAHAVIR CHAMBERS, LIBERTY SQUARE STANZA, HIMAYATH NAGAR, HYDERABAD-500029, TELANGANA CONTACT NO: 040-667299999	ANDHRA PRADESH, TELANGANA
REGIONAL OFFICE (SOUTH EAST-II) MARUTI SUZUKI INDIA LIMITED UTKAL SIGNATURE, UNIT NO. 605 & 606 (6TH FLOOR) NH-5, PAHAL, CUTTACK-BHUBANESWAR ROAD, BHUBANESWAR-752101, ODISHA PH. 0674-2914129, 0674-2914139 & 0674-2914229	ODISHA AND CHHATTISGARH
REGIONAL OFFICE (CENTRAL-I & II) MARUTI SUZUKI INDIA LIMITED Nelson Mandela Marg,Vasant Kunj II, Vasant Kunj, New Delhi, Delhi - 110070	DELHI
REGIONAL OFFICE (CENTRAL-III) MARUTI SUZUKI INDIA LIMITED 7TH POOJA TOWER, 3 GOPALPURA BYEPASS, TONK ROAD JAIPUR (RAJASTHAN)- 302018, CONTACT NO.: 0141-2550888	RAJASTHAN
REGIONAL OFFICE (CENTRAL-IV) MARUTI SUZUKI INDIA LIMITED 3RD FLOOR, COMMERCE HOUSE, 7 RACE COURSE ROAD INDORE (M.P) PIN CODE: 452001 CONTACT NO.: 07314069481/852/385.	MADHYA PRADESH

DETAILS OF AREA OFFICES	
Area Office Location	**Area Office Address**
Agra	Maruti Suzuki India Limited, 7th Floor, B-15/8, Shri Vrindavan Tower, Sanjay Place, Agra-282001 Ph:-0562-4052646/47
Bhopal	Maruti Suzuki India Limited, 522, 5th Floor Corporate Zone, Ashima Mall, Hoshangabad Road, Bhopal (M.P) Pin Code: 462 026 Contact : 0755 6051555
Calicut	Maruti Suzuki India Limited, Ground Floor, Aarpees Arcade, YMCA Cross Road, Opp. Indusind Bank, Kozhikode, Kerala -PIN 673001 Phone:- 0495-2723151
Coimbatore	Maruti Suzuki India Limited, Srivari Gokul Towers, First floor, (East wing), No.108/3, Race course, Coimbatore - 641018 Ph.- 0422-2221091
Hubli	Maruti Suzuki India Limited, Shiva Avenue, 2nd Floor, Gokul Road, Hubli - 580030, Ph: 0836-4259447
Jammu	Maruti Suzuki India Limited, Hall no: 315, A2,3rd Floor, South Block, Bahu Plaza, Jammu-180012 M: 9622066444/9622524343
Ludhiana	Maruti Suzuki India Limited, SCO No. 16/17, 4Th Floor, Fortune Chambers, Feroze Gandhi Market, Ludhiana-141001, Ph: 0161-4649764
Madurai	Maruti Suzuki India Limited, 3rd floor, ADR towers, Kalavasal, Theni Bye pass road, Madurai-625016 Ph. - 0452-4200203
Mangalore	Maruti Suzuki India Limited, F - 4,5,6, 1st Floor, Classic Gateway, Mahaveer Circle Pumpwell Mangalore – 575002 Ph. 0824 - 4112111

SERVICE NETWORK (AS ON 31.01.2026)

DETAILS OF AREA OFFICES	
Area Office Location	**Area Office Address**
Nagpur	Maruti Suzuki India Limited, Plot No.244, 1st Floor, Narayani House, Hill Road, Dharampeth Extension, Nagpur - 440010 (Maharashtra) Ph. (0712) 2225808
Nashik	Maruti Suzuki India Limited, Plot No.202, Rushiraj Towers, Jehan Circle, Gangapur Road, Nashik - 422 005 (Maharashtra) Ph. (0253) 6698551
Patna	Maruti Suzuki India Limited, 307-308, Vasundhara Metro Mall, Rajapur Pul, East Boring Canal Road, Patna - 800001, Bihar Phone - 0612-2559145
Raipur	Maruti Suzuki India Limited, 629-630, Magneto Offizo,Magneto The Mall, Labhandi, Raipur, Chhattisgarh, Pin - 492001 Ph.- 0771-4039643
Siliguri	Maruti Suzuki India Limited, Unit 401, 4th Floor, Quantum Siliguri, Parivahan Nagar, Matigara Siliguri - 734010 West Bengal
Surat	Maruti Suzuki India Limited, 304, Shivalik Western, Above TGB Restaurant, L.P. Savani Road, Adajan Surat - 395009
Trivandrum	Maruti Suzuki India Limited, 8th Floor, KEK Tower, Opp. Police Head Quarters, Vazhuthacadu, Trivandrum - 695010, Phone:- 0471-2322366
Udaipur	Maruti Suzuki India Limited, 302 & 303, 3rd Floor. Manglam's Fun Square, Durga Nursery Road. Udaipur, (Rajasthan) 313001
Vijayawada	Maruti Suzuki India Limited, Vaishinavi Complex, 4th Floor, Unit 2,Opposite Executive Club, Vijayawada, -530002,
Visakhapatnam	Maruti Suzuki India Limited, Door No. 10-50-58/1, 3rd Floor, Waltair Main Road, Ramnagar, Above westside store, RK Estates, Visakhapatnam-530002, Andhra Pradesh Contact No: 0891 2745299

ANDHRA PRADESH

ANANTAPUR

1. JAYALAKSHMI AUTOMOTIVES PVT LTD (1BNB-1B-01), SY. NO. 239 - 2CIA, KAKALAPALLI, ANANTAPUR

CHITTOOR

2. BHARGAVI AUTOMOBILES PVT. LTD. (1CNA-1C-01), D.NO. 23-1/2, DR. JYOTHI REDDY NAGAR, CK PALLI, CHITTOR, PIN-517001

CUDDAPAH

3. ADARSHA AUTO WORLD PVT LTD (1DNA-1D-01), #30/205-1-1-2, REVENUE WARD 31,DUVUNI KA, #30/205-1-1-2, REVENUE WARD 31,DUVUNI KA

GUDIVADA

4. VARUN MOTORS PVT LTD (CLNA-CL-01), SY.NO:75/2 & 75/3,BANTUMILI ROAD,GUDIVADA,,AP

GUNTUR

5. JAYALAKSHMI AUTOMOTIVES PVT LTD (G5NA-G5-01), D-NO:199/2, OPP.AUTONAGAR, NH 16, VJA - GNT SERVICE ROAD, GUNTUR, ANDHRA PRADESH - 522001
PH :9959844644.
6. JAYALAKSHMI AUTOMOTIVES PVT LTD (G5NA-G5-02), SURVEY NO 110 , AMRAVATHI ROAD , INNER RING ROAD , GUNTUR

KAKINADA

7. VARUN MOTORS PVT LTD (W7NA-W7-01), BHASKARA GARDENS JAGANDHAPURAM ,KAKINADA - 533016

KURNOOL

8. MSA MOTORS (C2NA-C2-01), PLOT NO. 1, 1A, 2, 2A, WARD NO. 96, NH 44, AUTO NAGAR, KURNOOL, ANDHRA PRADESH 518003 - 518003

NANDYAL

9. MSA MOTORS (CKBN-CKB-01), SURVEY NO. 144, PYKI, UDUMALAPURAM(V), NEAR VENKATESWARAPURAM, NANDYAL

NARASARAOPET

10. JAYALAKSHMI AUTOMOTIVES PVT LTD (JTNA-JT-01), NH 167A, SRINIVASA NAGAR, NARASARAOPETA, ANDHRA PRADESH 522601

NARSIPATNAM

11. JAYABHERI AUTOMOTIVES (WTNA-WT-01), SY NO 133/1, PEDA BODDEPALLE, NARSIPATNAM,ANDHRA PRADESH - 531116

NELLORE

12. BHARGAVI AUTOMOBILES PVT LTD (A8NA-A8-01), SURVEY NO 245B, CHEMUDUGUNTA VILLAGE, NH-16, ADJACENT TO SRIDS KALYANA MANDAPAM, NELLORE, ANDHRA PRADESH - 524002
PH :8886682222.

ONGOLE

13. JAYALAKSHMI AUTOMOTIVES PVT LTD (8YNA-8Y-01), SURVEY NO:194/2, BESIDE NH 5, MUKTHINUTHALAPADU, ONGOLE, ANDHRA PRADESH – 523225 - 523225
PH :9492133433.

PENDURTHI

14. VARUN MOTORS PVT LTD (BAPN-BAP-01), Y.NO:204/2 D.NO:6-36/1,OPP AYYAPA SWAMY TEMPLE,PENDURTHI,VISHAKAPATNAM.AP

RAJAHMUNDRY

15. SB MOTOR CORP (C5NA-C5-01), D.NO:84-1-12, PADMAVATI NAGAR, BESIDE ONGC BASE COMPLEX, NH-45, RAJAHMUNDRY, ANDRAPRADESH-533106. - 533016
PH :9248727888.

SRIKAKULAM

16. VARUN MOTORS PVT LTD (W6NA-W6-01), PEDDAPADU ROAD, ARASAVALLI POST, SRIKAKULAM DISTRICT, ANDHRA PRADESH - 532401
PH :9885317344.
17. VARUN MOTORS PVT LTD (W6NA-W6-S1) - 0

TIRUPATI

18. BHARGAVI AUTOMOBILES PVT LTD (N9NA-N9-01), D NO:9-91/1, BANGLORE BY PASS ROAD,DHAMINEDU VILLAGE, TIRUPATI RURAL, ANDHRA PRADESH - 517503
19. VISHNU CARS PVT LTD (N9NB-N9-01), 150, TIRUPATI BYPASS ROAD, NEAR SOUTHERN SPICE HOTEL, TIRUPATI

VIJAYAWADA

20. VARUN MOTORS PVT LTD (26NA-26-01), OPP TO PRIYA PICKLES, BANDAR ROAD, PORANKI, VIJAYAWADA, ANDRAPRADESH-521137. - 521137
PH :6309955655.
21. VARUN MOTORS PVT LTD (26NA-26-02), DOOR NO1-1-153,REVENUE WARD NO.1,BLOCK NO3,VIDHYADARARPURAM,VIJAYAWADA - 0
22. SANTOSH AUTOMOTORS PRIVATE LIMITED (26NC-26-01), TCR COLONY, KCP COLONY, PORANKI, VIJAYAWADA, ANDHRA PRADESH 521137 - 521137

VISHAKHAPATNAM

23. VARUN MOTORS PVT LTD (46NA-46-S1) - 0
24. VARUN MOTORS PVT LTD (46NA-46-01), DOOR NO 38-22-27, SURVEY NO 39, KAPARADA VILLAGE, INDUSTRIAL ESTATE, VISHAKHAPATNAM - 533016
25. VARUN MOTORS PVT LTD (46NA-46-02), NO:88/B, D BLOCK, VARUN AUTO PARK, SRINAGAR, OLD GAJUWAKA, VISAKHAPATNAM-530026. A.P - 530026

VIZAG

26. JAYABHERI AUTOMOTIVES PVT LTD (46NB-46-01), D.NO:8-238; SY NO:7/1A; GOPALAPATNAM; VISAKHAPATNAM (AP) - 530027

VIZIANAGARAM

27. JAYABHERI AUTOMOTIVES PVT LTD (N8NA-N8-01), OPPOSITE RELIANCE MART, BALAJI JUNCTION, 100 FEET RING ROAD , VIZIANAGARAM - 535002

VSKP (ADAVIVARAM)

28. VARUN MOTORS PVT LTD (46NA-46-3), PLOT NO 47, BANGARUTHALLI NAGAR, DARA PALEM, ADAVIVARAM VISAKHAPATNAM.:– 530028 - 530028

ASSAM

AIZWAL

29. GIG MOTORS (91NA-91-01), ITI WORLD BANK ROAD, AIZAWL, MIZORAM - 796005

BAIHATA CHAIRILI

30. PALLAVI MOTORS PVT LTD (BNLN-BNL-01), DAG NO. 187, PATTA NO.138, MAUZA-BAR-BANGSHAR, VILLAGE KSHUDRA PALAHA, BAIHATA CHARIALI, ASSAM - 781381

BARPETA TOWN

31. PODDAR CAR WORLD PVT LTD (SQTN-SQT-01), DEWRIKUCHI,HOWLY BARPETA ROAD,

BIJOYNAGAR

32. PODDAR CAR WORLD PVT LTD (09NA-IA-03), DAG NO. 1093/1598 PATTA NO 709, BARTEZPUR PO KUKURMARA PS PALASHBARI , DIST KAMRUP

BISWANATH CHARALI

33. R D MOTORS (RAMLAL DURGADUTT MOTORS PVT LTD) (BXIN-BXI-01), BRAHMAPUTRA CHAPORI, NEAR POWER GRID OFFICE,

BAGHMARI, BISWANATH CHARALI, ASSAM 784176

BONGAIGAON

34. BHARATI MOTORS PVT LTD (7NNA-7N-01), CHAPAGURI RD, NEAR POST OFFICE, NORTH BONGAIGAON, AMGURI, BONGAIGAON, ASSAM 783380 - 783380
PH :7002350887.

CHANGSARI

35. PODDAR CAR WORLD PVT LTD (09NA-TED-04), DAG NO 640 K P PATTA NO. 464 VILLAGE - CHANGSARI MOUZA - SILA SENDURI KAMRUP RURAL

DIBRUGARH

36. VISHAL CAR WORLD PVT LTD (C1NA-C1-01), MOHPUALIMORA GOHAIN GAON, A.T ROAD, DIBRUGARH, ASSAM - 786008
PH :8000900008.

GOLAGHAT

37. R D MOTORS (RAMLAL DURGADUTT MOTORS PVT LTD) (J3NA-J3-01), DAG NO-308,PATTA NO-53, VILLAGE RANGAJAN BAGAN GAON, MARANGI, MOUZA, MARANGI REVENUE CIRCLE, GOLAGHAT - 785702

GUWAHATI

38. BIMAL AUTO AGENCY (09NB-`09-01), DREAMLAND APPARTMENT,NAHRANI PATH, DISPUR LAST GATE, GUWAHATI - 781006 (ASSAM)
PH :9864074525.
39. PALLAVI MOTORS PVT LTD (09NC-09-01), NARENGI, KALITAKUCHI, SATGAON, GUWAHATI, ASSAM - 781026
40. PODDAR CAR WORLD PVT LTD (09NA-09-01), AT ROAD ,KAMAKHYA GATE ,GUWHATI ,KAMRUP-781009 - 781009
PH :8085957586.

HOJAI

41. RD MOTORS (ARAN-ARA-01), DAG NO-665,PATTA NO-467,VILLAGE DIMAPUR, DISTRICT HOJAI ASSAM- 782435

JORHAT

42. R D MOTORS (RAMLAL DURGADUTT MOTORS PVT LTD) (G9NB-G9-01), M/S R D MOTORS PVT LTD , DHAPKATA, NEAR TINALI, JORHAT -785006 - 785006
PH :7002099547.

MANGALDOI

43. PODDAR CAR WORLD PVT LTD (09NA-YW-02), WARD NO 2 NH - 15, MANGALDOI TOWN, DARRANG - ASSAM

NAGAON

44. R D MOTORS (RAMLAL DURGADUTT MOTORS PVT LTD) (7JNA-7J-S1) - 0

NALBARI

45. BIMAL AUTO AGENCY (92NA-92-01), BIMAL AUTO AGENCY NALBARI HAJO ROAD AMAYAPUR, ASSAM - 781334 - 781334

NORTH LAKHIMPUR

46. SAIKIA (7PNA-7P-01), NH - 15, CHARAIMORIA, NORTH LAKHIMPUR, ASSAM 787032

SIBSAGAR

47. JAINCO AUTOTECH PRIVATE LIMITED (L9NA-L9-01), DAG NO. 531 OF P.P. NO. 4, OF VILLAGE CHANGMAI GAON, MOUZA BETBARI, SIVASAGAR REVENUE CIRCLE, SIVASAGAR

SILCHAR

48. JAIN UDYOG (J2NA-J2-01), R.S. PATTA NO.149, DAG NO.579, MOUZA RONGPUR, SILCHAR, ASSAM - 788009
PH :9436121557.

SONARI

49. JAINCO AUTOTECH PRIVATE LIMITED (BFCN-BFC-01), NAMRUP SAFEKHATI ROAD, WARD NO-6, SONARI - 785690 - 785690

TEZPUR

50. R D MOTORS (RAMLAL DURGADUTT MOTORS PVT LTD) (T1NA-T1-01), SOLAGAN VILLAGE , GOROIMARI , SONABEEL, BEFORE MAA KALYANI PETROL PUMP, TEZPUR -784105
PH :9836872710.

TINSUKIA

51. VISHAL CAR WORLD PVT LTD (J4NA-J4-01), NEXA SHOWROOM (BESIDE VISHAL BIKER'S WORLD),A.T. ROAD, LAIPULI,TINSUKIA ,ASSAM -786183
PH :9864211022.

BIHAR

BEGUSARAI

52. GS MOTORS PVT LTD (1UNA-1U-01), NALA ROAD, BEGUSARAI, PIN-851101, BIHAR - 851101

BHAGALPUR

53. SEEMANCHAL MOTORS (G8NA-G8-S1)

DARBHANGA

54. RAJKRISHNA MOTORS LLP (1VNA-1V-S1) - 0

55. RAJKRISHNA (1VNA-1V-01), MADHPUR, KHATA NO. 28, KHASRA NO 107, 108 NH 57 – DARBHANGA (BIHAR)

GAYA

56. KARLO AUTOMOBILES PRIVATE LIMITED (Y6NA-Y6-01), GAYA DOBHI MAIN ROAD, NEAR DOMUHAN, BODHGAYA, PIN -824231, BIHAR.

PATNA

57. ALANKAR AUTO SALES & SERVICE PVT LTD (15NA-15-01), OPP.RUPASPUR THANA, BAILEY ROAD NEAR GOLA ROAD, PATNA - 800002
PH :9262899356.

58. REESHAV AUTOMOBILES PVT LTD (15NB-15-01), MUKDUMPUR,DIGHA,90 NO GATE, PATNA - 800012
PH :7369944132.

59. SHREE GOPAL AUTO PVT LTD (15NC-`15-01), BIKHACHAK ANISHABAD NEW BYPASS ROAD, OPPOSITE SITA RAM COMMUNITY HALL, PATNA, BIHAR - 800002 - 800002
PH :9262853333.

60. REESHAV AUTOMOBILES PVT LTD (15NB-15-02), MAULANA AZAD NAGAR, F.C.I MORE PHULWARISHARIF PATNA – BIHAR

PURNEA

61. SEEMANCHAL MOTORS PVT LTD (6VNA-6V-01), DAMKA CHOWK,KISHANGANJ ROAD, NH-31,GUALBBAGH,PURNEA,BIHAR - 854326
PH :9334710055.

SIWAN

62. SHREE GOPAL AUTO PVT LTD (O5NA-O5-01), KHATA NO 410, SURVEY NO 464 JASAULI PAKULI CHHAPRA SIWAN ROAD NH 85, SIWAN BIHAR 841241 - 841241

SUPAUL

63. GS MOTORS PVT LTD (SKUN-SKU-01), KHATA NO. 216,218, KHESA NO. 500-504, PIPRA ROAD, SUPAUL

CHANDIGARH

CHANDIGARH

64. AUTOPACE NETWORK PVT LTD (07NA-07-01), PLOT NO. 37, INDUSTRIAL AREA – PHASE 1, CHANDIGARH - 160002
PH :7087119796.

65. AUTOVOGUE PVT LTD (07NC-07-S1) - 0

66. AUTOVOGUE PVT LTD (07NC-07-02), PLOT NO - 29/4 INDUSTRIAL AREA PHASE -2, CHANDIGARH - 160002
PH :8725099835.

67. NAVDESH AUTOS LLP (07NE-07-01), PLOT NO 182/11, INDUSTRIAL AREA PHASE 1, CHANDIGARH - 160002
PH :8827057534.

CHHATTISGARH

AMBIKAPUR

68. MAHAMAYA AUTOCARS PRIVATE LIMITED (AENA-AE-01), AJAB NAGAR,MAHATHMA GANDHI ROAD,AMBIKAPUR - 497001
PH :9516609632.

BALODABAZAAR

69. SKY AUTOMOBILES (GJNA-GJ-01), AMBEDKAR CHOWK, RAIPUR RD, BALODA BAZAR, CHHATTISGARH 493332. - 493332

BEMETARA

70. CHOUHAN AUTOMOBILES LLP (CBCN-CBC-01), NEAR AK MULTISPECIALTY HOSPITAL, KRISHNA VIHAR, RAIPUR ROAD, BEMETRA, BEMETRA DISTRICT, CHHATTISGARH

BHILAI

71. SPARSH AUTOMOBILES PVT LTD (83NB-83-S1) - 0

BILASPUR-CG

72. SATYA AUTO PVT LTD (C3NB-C3-01), PLOT NO 53, SECTOR C, SIRGITTI INDUSTRIAL AREA, BILASPUR, CHHATTISGARH - 495001
PH :6372803057.

DURG

73. CHOUHAN AUTOMOBILES LLP (7WNA-7W-01), KH NO 215/2, PLOT NO 6 BESIDES D MART DURG BY PASS PIN - 490020 - 490020

JAGDALPUR

74. SKY AUTOMOBILES (ECNA-EC-01), NEAR BR COLD STORAGE, GEEDAM ROAD, JAGDALPUR. (3S)

JANJGIR

75. SATYA AUTOMOBILES (9NNA-9N-01), NEAR KHOKSA RLY CROSSING, CHAMPA RD, JANJGIR, CHHATTISGARH - 495668

KAWARDHA

76. CHOUHAN AUTOMOBILES LLP (DINA-DI-01), KHASRA NO. 37/10, VILLAGE CHHIRAHA CHOWK,KAWARDHA, DISTRICT KABEERDHA

KORBA

77. SATYA AUTO PVT LTD (U7NB-U7-01), SHED NO 10, PART OF KHASRA NO 885, INDUSTRIAL AREA, RAJGAMAR ROAD, KORBA (C.G)

MUNGELI

78. SATYA AUTO PVT LTD (C3NB-BLE-02), BILASPUR ROAD , GIDHA , CHHATTISGARH - 495334

RAIGARH

79. M SQUARE MOTORS (A UNIT OF MAHAVIR MOTOCORP PRIVATE LIMITED) (7YNA-7Y-01), BESIDE MSQUARE NEXA SHOWROOM,KOTRA ROAD BYPASS,RAIGARGH,CHATTISGARGH,496001(COPY OF LAYOUT ATTACHED AS ANNEXURE)

RAIPUR

80. SKY AUTOMOBILES (50NB-50-01), NEXA MAGNETO, LABHANDHI ,G. E. ROAD, RAIPUR

81. SPARSH AUTOMOBILES PVT LTD (50NA-50-01), NEAR TCI GODOWN, NH-6, CHANDANDIH, TATIBANDH, RAIPUR, CHATTISGARH - 492029
PH :9926626662.

82. VISHWABHARTI AUTOMOBILES PVT LTD (50NC-50-01), SADDU RD, DALDAL SEONI, RAIPUR,CHHATTISGARH. - 492001

83. VISHWABHARTI AUTOMOBILES PVT LTD (50NC-50-S1) - 492010

84. VISHWABHARTI AUTOMOBILES PVT LTD (50NC-50-02), MAIN ROAD DEOPURI, RAIPUR-DHAMTARI ROAD, 492001

RAJNANDGAON

85. SPARSH AUTOMOBILES (LQNA-LQ-01), MUMBAI - KOLKATA HWY, ATAL VIHAR COLONY, RAJNANDGOAN, CHHATTISGARH - 491441

DELHI

DELHI

86. AAA VEHICLEADES PVT LTD (08NW-08-01), BLOCK C, NAJAFGARH ROAD INDUSTRIAL AREA, NEW DELHI, DELHI 110015 - 110015
PH :8750611111.

87. COMPETENT AUTOMOBILES COMPANY LIMITED (08NF-08-01), PLOT NO-34,RAJASTHAN UDYOG NAGAR, GT AKRNAL ROAD ,DELHI - 110033
PH :9932049425.

88. JAGMOHAN AUTOMOTIVES PVT LTD (08NX-08-01), C133-136(PART, PHASE I, INDUSTRIAL AREA, MANGOLPURI S BLOCK, NEW DELHI, DELHI 110083 - 110083
PH :9812259000.

89. MAGIC AUTO PVT LTD (A UNIT OF MAGIC LEASING & FINANCE PVT LTD) (08NA-08-01), CISF GATE NO 1, D-21, CORPORATE PARK, NEAR DWARKA SEC-8 METRO STATION, NEW DELHI - 110075
PH :9873052000.

90. MAGIC AUTO PVT LTD (A UNIT OF MAGIC LEASING & FINANCE PVT LTD) (08NA-08-S1) - 110075

91. PLATINUM MOTOCORP LLP (08NQ-08-01), PLOT NO-H4,BLOCK-B1,MOHAN CO-OPERATIVE INDEX,MATHURA ROAD,PIN-110044 - 110044

92. RANA MOTORS PVT LTD (08NE-08-01), B-242, OKHLA INDUSTRIAL AREA PHASE 1, OKHLA, NEW DELHI

93. SHREYASH AUTOMOTIVES PVT LTD (08N4-08-S1), B-91 , PHASE 1 , MAYAPURI , DELHI - 110064

94. SHREYASH AUTOMOTIVES PVT LTD (08N4-08-01), B-91, MAYAPURI PHASE-1, NEW DELHI

95. TR SAWHNEY AUTOMOBILES PVT LTD (08NN-08-01), C-46, OKHLA INDUSTRIAL AREA PHASE 2, OKHLA NEW DELHI
PH :9953350008.

GOA

(TISWADI) GOA

96. SAI POINT (34NC-34-01), SR NO 183/13, MORGADO VADDO ROAD, NEAR INDIAN OIL PETROL PUMP, GOA VELHA, TISWADI, GOA - 403108

BICHOLIM

97. SAI SERVICE (BHNN-BHN-01), H. NO. 192, SURVEY NO. 103/1, ASHWAMED HEIGHTS, CARAPUR SARVANA VILLAGE, BICHOLIM, GOA - 403505 - 403505

GOA

98. CHOWGULE INDUSTRIES PVT LTD (34NB-34-S1) - 0
99. CHOWGULE INDUSTRIES PVT LTD (34NB-34-01), SY. NO. 267/1, NEXT TO ARLEM RTO, ARLEM, RAIA, SALCETE - (GOA) - 403720. - 403720
PH :9850966950.
100. SAI POINT CARS PVT LTD (34NC-34-S1) - 0

MAPUSA

101. SAI SERVICE PVT LTD (34NA-34-02), PLOT NO 41, TIVIM INDUSTRIAL ESTATE, KARASWADA, MAPUSA BARDEZ GOA
102. CHOWGULE INDUSTRIES PVT LTD (34NB-34-02), PLOT NO 23, TIVIM INDUSTRIAL ESTATE, KARASWADA, MAPUSA GOA 403517. - 403517

PANAJI

103. SAI SERVICE PVT LTD (34NA-34-01), EMPRESSA INDUSTRIAL CHODANKAR, SURVEY NO. 114/2, SALVADOR DO MUNDO, PORVORIM, BARADEX, GOA - 403521

GUJARAT

AHMEDABAD

104. PEGASUS (A UNIT OF VISUAL MOTORS PVT LTD) (01NG-01-01), PLOT NO 9, OPP RABARI COLONY BRTS STOP, CTM, NAROL - NARODA HIGHWAY, NH-8, AHMEDABAD, GUJARAT. - 380026
PH :9909023000.
105. POPULAR WHEELERS (INDIA) PVT LTD (01NC-01-01), T P 20, F P 78, OPPOSITE SUN SQUARE COMPLEX OFF, C G ROAD, NEAR HL COLLEGE, NAVRANGPURA GULBAI TEKRA, AHMEDABAD, GUJARAT - 380009
PH :9925203344.
106. STARLINE CARS PVT LTD (01NE-01-01), PLOT NO 236, GIDC, NARODA, AHMEDABAD, GUJARAT. 382 330 - 382330
PH :7436003235.
107. PEGASUS (A UNIT OF VISUAL MOTORS PVT LTD) (01NG-01-02), SURVEY NO. 407/1, FP NO. 308/1, VIP ROAD, SHELA, SOUTH BOPAL, AHMEDABAD
108. KATARIA AUTOMOBILES PRIVATE LIMITED (01NF-01-01), PLOT NO. 14-23, T.P SCHEME NO. 1, BOPAL, AHMEDABAD-380058. - 380058
109. KIRAN MOTORS LIMITED (01NB-01-01), RAJTHAL BANQUET, -SHILAJ ROAD,

ANAND

110. AMAR CARS PVT LTD (F7NA-F7-01), SURVEY NO 1583, PLOT NO 144, NEAR GANESH CROSSING, ANAND SOJITRA ROAD, ANAND, GUJARAT - 388001
PH :9925407666.

ANKLESHWAR

111. RAVIRATNA MOTORS PVT LTD (P9NA-P9-01), S. NO. 449 & 455, PLOT NO. 4 & 5, MAHAVIR TURNING POINT, ANKLEHSWAR, GUJARAT - 393001 - 393001

BHARUCH

112. RAVIRATNA MOTORS PVT LTD (F8NA-F8-01), SURVEY NO 185/3, NH8, ZARDESHWAR, BHARUCH, GUJARAT. - 392001
PH :9727700823.

BHAVNAGAR

113. KIRAN MOTORS LIMITED (C9NB-C9-01), RAMDEV SOCIETY, CHITRA GIDC, BHAVNAGAR - GUJARAT

BHUJ

114. K D MOTORS (P5NA-P5-01), 33, UMA PARK, BEHIND MARUTI SUZUKI SHOWROOM, MIRZAPAR HIGHWAY, BHUJ - 370040
PH :9879898799.

BOTAD

115. KATARIA AUTOMOBILES PRIVATE LIMITED (APNA-AP-01), PLOT NO. 30/2, PALIYAD ROAD, BOTAD, GJ

DABHOI

116. KATARIA AUTOMOBILES PRIVATE LIMITED (UUNA-UU-01), SATYAM COMPLEX, NEAR VEGA BRIDGE, VEGA CHOKDI. DABHOI

DAHOD

117. R B CARS PVT LTD (2CNA-PL-02), PLOT NO. 142, BAPUNAGAR, DAHOD-INDOR HIGHWAY ROAD, DAHOD.

DEHGAM

118. NANDA AUTOMOBILES PVT LTD (NRNA-NR-01), SURVEY NO. 4536/2, BESIDES SHREENATH SOCIETY, OPP. SABARMATI GAS STATION, DEHGAM, GUJARAT-382305.

GANDHIDHAM

119. B M AUTOLINK (77NA-77-01), SURVEY NO 129/26, GALPADAR - ANJAR HIGHWAY, AIRPORT ROAD, GANDHIDHAM, KUTCH , GUJARAT - 370201
PH :7211120014.

GANDHINAGAR

120. NANDA AUTOMOBILES PVT LTD (2BNA-2B-01), BLOCK NO 403, NR SANGATH GATEWAY, OPP RAISAN PETROL PUMP, KUDASAN, GANDHINAGAR, GUJARAT. - 382421
PH :9687641974.

GODHRA

121. R B CARS PVT LTD (2CNA-2C-01), SURVEY NO. 38/2 PAIKE 1 PAIKE 2, LUNAWADA ROAD, OPP. GIDC, GODHRA - 389001 - 389001
PH :9925051444.

HALOL

122. RB CARS (BKCN-BKC-01), SURVEY NO. 1684, PLOT NO124/5-7, HALOL BYPASS, DISTRICT PANCHMAHAL, HALOL, GUJARAT – 389350 - 389350

HALVAD

123. DREAM VEHICLES PVT LTD (GXNA-GX-01), NEAR JANTA FOOD MALL, HALAVAD-DHRANGADHRA HIGHWAY, HALVAD-36300. DISTRICT MORBI - 363330

HIMATNAGAR

124. KIRAN MOTORS LIMITED (P6NA-P6-01), SURVEY NO. 114, OPP. SABAR DAIRY, BORIYA KHURD, HIMMATNAGAR, DIST. SABARKANTHA (GUJARAT).

JUNAGADH

125. PERFECT AUTO SERVICES (A DIVISION OF PERFECT RETREADS PVT LTD) (K8NA-K8-01), GIDC 2, RAJKOT HIGHWAY, JUNAGARH - 362037
PH :9909022619.

KADI

126. STARLINE CARS PVT LTD (URNA-UR-01), CHHALTRAL KADI HIGHWAY, IRANA ROAD, MONJE BUDASAN, TALUKA KADI, DIST MEHSANA - 382715

MANDVI

127. KIRAN MOTORS LIMITED (UYNA-UY-01), SR. NO. 62, MANDVI ZANKHVAV ROAD, AT & PO RUPAN, TALUKA MANDVI, DISTT. SURAT.

MEHSANA

128. STARLINE CARS PVT LTD (D1NA-D1-01), REVENUE SURVEY NO. 342, PLOT NO.1, 4, 5 AND 6 TO 12, VILLAGE NAGALPUR, DISTRICT MEHSANA, GUJARAT - 384002

MORBI

129. PERFECT AUTO SERVICES (A DIVISION OF PERFECT RETREADS PVT LTD) (X5NA-X5-01), RAJKOT MORBI HIGHWAY, VILLAGE SANALA, MORBI - GUJARAT (363641) - 363641

NADIAD

130. KIRAN MOTORS LIMITED (P7NA-P7-01), SURVEY NO. PAIKI 1253/1,2,3,4 NEAR BHAVAN SCHOOL , BEHIND MC DOWNLOAD , NADIAD UTTARSANDA ROAD , NADIAD (GUJARAT).

NAVSARI

131. KATARIA AUTOMOBILES PRIVATE LIMITED (Q7NA-Q7-01), BLOCK NO 1064 AT VILLAGE GANESH SISODARA, TALAND DISTRICT NAVSARI

PALANPUR

132. TANU MOTORS PVT LTD (Q8NA-Q8-01), NR. MARUTI SUZUKI COMMERCIAL SHOWROOM, PALANPUR - DEESA HIGHWAY, PALANPUR-385001 - 385001

PATAN

133. STARLINE CARS PVT LTD (Q9NA-Q9-01), ADJACENT ARENA SET UP, PATAN UNJHA ROAD, PATAN (GUJARAT) - 382465 - 382465
PH :9909043244.

RAJKOT

134. PERFECT AUTO SERVICES (A DIVISION OF PERFECT RETREADS PVT LTD) (55NB-55-01), PLOT NO. 110, 111, 127 & 128, KOTHARIYA, NEAR PERFECT HOUSE, GONDAL ROAD, RAJKOT - 360004
PH :9512035501.

RAJPIPLA

135. RAVIRATNA MOTORS PVT LTD (9XNA-9X-01), S.NO. 779, RAJPIPLA VADODARA HIGHWAY, RAJPIPLA, DISTRICT NARMADA

SURAT

136. AMAR CARS PVT LTD (40ND-40-01), SURVEY NO 139,BLOCK NO-"218"\A,OPPOSITE TO AWADH ARENA MALL,V.I.P ROAD ,BHARTHAMA,SURAT,GUJRAT - 395007
PH :9871389795.
137. KATARIA AUTOMOBILES PRIVATE LIMITED (40NA-40-01), OPP. KAMNATH MAHADEV TEMPLE, NEAR SOHAM CIRCLE, ALTHAN CANAL ROAD, ALTHAN, SURAT. GUJARAT - 395017 - 395017
138. KIRAN MOTORS LIMITED (40NB-40-01), BLOCK NO 443, FP NO 26 MOJE PALGAM, ADAJAN, SURAT, GUJRAT -395009 - 395009
PH :7020569426.
139. PEGASUS (A UNIT OF VISUAL MOTORS PVT LTD) (40NE-40-01), TP NO.6,FP NO.380,CS NO.1207,DHAMANWALA COMPOUND,NEAR GAYWALA CHAMBERS, CANAL ROAD, KHATODARA UDHANA

SURENDRANAGAR

140. DREAM VEHICLES PVT LTD (LCNA-LC-01), PLOT NO. 302, GIDC AREA, WADHWAN CITY, SURENDERNAGAR, GUJARAT. - 363035
PH :8511104644.

VADODARA

141. AMAR CARS PVT LTD (22NB-22-01), SHED NO. 56, SARDAR INDUSTRIAL ESTATE, AJWA ROAD, VADODARA - 390019 - 390019
142. KATARIA AUTOMOBILES PRIVATE LIMITED (22NA-22-01), WARD NO 11 CIRCLE SAINATH ROAD, HARINAGAR-VASNA ROAD VADODARA - 390007
PH :9824701590.

VAPI

143. KATARIA AUTOMOBILES PRIVATE LIMITED (97NA-97-01), NEAR CROMA OUTLET, RATHOD CHAMBERS, DAMAN ROAD,CHALA VAPI - 396191
PH :9714799985.

HARYANA

AMBALA

144. EAKANSH WHEELS (18NA-18-01), AMBALA-CHANDIGARH HIGHWAY ADJOINING AAJ SAMAJ VILLAGE-SADDOPUR, AMBALA
PH :8395903111.

ASSANDH

145. KARNAL MOTORS PVT LTD (CSNA-CS-01), KAITHAL BYE-PASS, BEHIND CAR CREW CENTER, ASSANDH

ATELI

146. PLATINUM MOTOCORP LLP (9QNA-9Q-02), OPP. ANARKAUR HOSPITAL, WARD NO.-11, KANINA ROAD, ATELI (HR)

BHIWANI

147. PASCO AUTOMOBILES (X3NA-X3-01), NEAR HUNNAMAL PIAYU, ROHTAK ROAD, BHIWANI-HARYANA-127021 - 127021
PH :9289192582.

CHARKHI DADRI

148. JAGMOHAN MOTORS PVT LTD (A6NA-CT-02), PLOT NUMBER 1142, KHATAUNI NUMBER 1206, CHARKHI DADRI, HARYANA

FARIDABAD

149. BVA AUTO PRIVATE LIMITED (58NC-58-01), 2J/53-54, NH-2, NIT FARIDABAD, HARYANA
PH :9911259288.

150. PASCO AUTOMOBILES (58NB-58-S1) - 0

151. PASCO AUTOMOBILES (58NB-58-01), 14/4, MATHURA ROAD, FARIDABAD, HARYANA - 121003
PH :9999790229.

152. VIPUL MOTORS PVT LTD (58NA-58-01), SUB DIVISION NO-3, INDUSTRIAL PLOT NO. -34, N.I.T, FARIDABAD HARYANA - 121001
PH :8562019252.

FARIDABBAD

153. AUTONATION (58NC-58-E1) - 121006

FARRUKHNAGAR

154. PLATINUM MOTOCORP LLP (KENA-KE-01), KHEWAT NO. 4/21/8 & 21/6 PTAUDI ROAD, FARRUKHNAGAR, HARYANA

GOHANA

155. JAGMOHAN AUTOMOTIVES PVT LTD (CUNA-CU-01), KILLA NO 36//16/2-25, KHEWAT NO 35//30 BAROTA VILLAGE SONIPAT ROAD, GOHANA, SONIPAT, 131301

GURGAON

156. PASCO AUTOMOBILES (95NA-95-01), SEC 17-18 DIVIDING ROAD, GURGAON- HARYANA, 122015 - 122015

157. PREM MOTORS PVT LTD (95ND-95-01), PLOT NO. 5, IDC, SECTOR-16, GURGAON, HARYANA - 122001
PH :1292565666.

158. TR SAWHNEY AUTOMOBILES PVT LTD (95NB-95-01), CRPF CAMP ROAD, VILLAGE ULLAWAS, NR. PIONEER PARK SECTOR-62, GURGAON, HARYANA - 122001
PH :1274254441.

159. PLATINUM MOTOCORP LLP (2LNA-95-02), KHEVAT NO 406,KHATONI NO 411, ALMORA CHOWK,SPR RD, SEC 75 A GURGAON - 122012

HISSAR

160. SARAOGI AUTOMOBILES PRIVATE LIMITED (76NB-76-01), PLOT NO -180, SECTOR 27-28, SATROD INDUSTRIAL AREA, HISAR - 125001

JHAJJAR

161. COMPETENT AUTOMOBILES COMPANY LIMITED (0BNA-0B-01), PLOT NO - 309 , OFFICER COLONY , BADLI ROAD , NEAR ANAJ MANDI , JHAJJAR , HARYANA

JIND

162. EAKANSH MOTORS PVT LTD (2KNA-2K-01), KHEWAT NO. - 155, KHASRA NO. - 142, MURRABA NO. - 210 OPP. HP LPG BOTTLING PLANT, ROHTAK-JIND ROAD, JIND. PIN - 126102. - 126102

KAITHAL

163. EAKANSH MOTORS PVT LTD (U8NA-U8-01), NH-65, OPP RKM FARM, AMBALA ROAD, KAITHAL - 136027

164. EAKANSH MOTORS PVT LTD (U8NA-U8-02), KHEWAT NO -458, KHATONI - 563, KITTAS - 20/87K 01M ADJOINING NEXA SHOWROOM, AMBALA HISAR ROAD, KAITHAL - 136027
PH :8813038777.

KARNAL

165. KARNAL MOTORS PVT LTD (89NA-89-01), 118-119 KM MILESTONE, G.T. ROAD, KARNAL, HARYANA - 132001

KHARKODA

166. JAGMOHAN AUTOMOTIVES PVT LTD (BUNA-BU-01), KHEWAT NO 885, KHATA NO 1151-53, KILA NO 153/16/2/2/4-11, SERVICE ROAD, KHARKHODA BYPASS, KHARKHODA SONIPAT.

KOSLI

167. DINCO 4 WHEELS LLP (AUTO VIBES) (CANN-CAN-01), KHEWAT NO.- 857& 900, RECT. NO-75/2/2, KOSLI, DIST.-REWARI (HARYANA).

KURUKSHETRA

168. KARNAL MOTORS PVT LTD (U6NA-U6-01), 155-200 MILESTONE GT ROAD KURUKSHETRA - 136038

MANESAR

169. PLATINUM MOTOCORP LLP (2LNA-2L-S1) - 0

NARAINGARH

170. EAKANSH WHEELS (CVNA-CV-01), KHEWAT NUMBER 118, W. NO. 5, NAHAN ROAD, NARAINGARH

NARNAUL

171. PLATINUM MOTOCORP LLP (9QNA-9Q-01), KAILASH NAGAR, REWARI ROAD, NARNAUL, HARYANA - 123001

NARWANA

172. EAKANSH MOTORS PVT LTD (CWNA-CW-01), KHEWAT & KHATA NO 441/626, OPPOSITIVE MAHINDRA SHOWROOM, HISSAR UKLANA ROAD, NARWANA, HARYANA.

NUH

173. PASCO AUTOMOBILES (7LNA-7L-01), KHATAUNI NO. 550, KILA NO. 14/1, SADDIK NAGAR, ALWAR ROAD, NUH (HARYANA).

PALWAL

174. AUTONATION (A UNIT OF TAYAL INDIA MOTORS PVT LTD) (EENA-EE-01), KILA NO.-15/2 & 16/1, 57 MILESTONE, NEAR ECHS HOSPITAL, MATHURA ROAD, PALWAL

PANIPAT

175. AUTOGALLERY (A UNIT OF RKH AUTOMOBILES PVT LTD) (D3NB-D3-01), NANGAL KHERI, NEAR BBMB POWER HOUSE, OPP. SEC-29, PANIPAT, HARYANA - 132103
PH :9812615000.

PATAUDI

176. PLATINUM MOTOCORP LLP (BYNB-BY-01), 422/2 , MITTAL & SONS , HAILYMANDI , WARD NO. 4 KULALNA ROAD , PATAUDI

REWARI

177. DINCO 4 WHEELS LLP (AUTO VIBES) (U1NA-U1-01), OPP. TULARAM STADIUM, DELHI ROAD, REWARI - 123401

ROHTAK

178. JAGMOHAN MOTORS PVT LTD (A6NA-A6-01), NORTHERN BYEPASS, SUKHPURA CHOWK, JIND ROAD, ROHTAK, HARYANA
PH :8754045446.

SIRSA

179. SHAKTI MOTORS PVT LTD (E4NA-E4-01), OPP. DELHI PUBLIC SCHOOL, NH-09, HISSAR ROAD, SIRSA - 125055

SONEPAT

180. JAGMOHAN AUTOMOTIVES PVT LTD (J5NB-J5-01), SONIPAT MURTHAL ROAD, OPPOSITE ASR CNG PUMP, SONIPAT - 131001

YAMUNANAGAR

181. PANDIT AUTOMOBILES PVT LTD (D2NA-D2-S1) - 0

HIMACHAL PRADESH

BADDI

182. GOYAL MOTORS PVT LTD (CIFN-CIF-01), KHASRA NO. 968/800, OPP. HOTEL APEX, BHUD, BADDI, DISTRICT SOLAN, HIMACHAL PRADESH - 173205

BILASPUR-HP

183. COMPETENT AUTOMOBILES COMPANY LIMITED (6YNA-6Y-01), KHASRA NO. 259/76 & 261/77 KHATONI : 18 , VILLAGE BEHAL PO BAMTA TEHSIL SADAR

CHAMBA

184. PATHANKOT VEHICLEADES PVT LTD (JFNA-JF-01), KHASRA NO. 780/370/2, GHOTI, PO- SAROL, TEH AND DISTT- CHAMBA, HIMACHAL PRADESH

HAMIRPUR

185. COMPETENT AUTOMOBILES COMPANY LIMITED (W9NA-W9-01), KHEWAT 13 MIN, KHATUANI 13 MIN, KHASRA NO. - 492,493, MOHAL CHATTER MOUZA, UGIALTA TEH, DIST. HAMIRPUR.

NAGROTA

186. KANGRA VEHICLEADES (A UNIT OF PATHANKOT VEHICLEADES PVT LTD) (D9NA-D9-01), VILL HATWAS, PATHANKOT - MANDI HIGHWAY, NAGROTA BAGWAN DISTT. KANGRA - 176047
PH :7018145653.

PALAMPUR

187. KANGRA VEHICLEADS (2TNA-2T-01), VPO BHATTU SAMULA, SUB. TEHSIL SULAH (PALAMPUR), DISTT. – KANGRA, HIMACHAL PRADESH - 176064 - 176064

PAONTA SAHIB

188. GOYAL MOTORS PVT LTD (8GNA-8G-01), SHAMSHERPUR, NH-72, POANTA SAHIB, HIMACHAL PRADESH.

RAMPUR (HP)

189. GOYAL MOTORS PVT LTD (CEZN-CEZ-01), VILLAGE NIRSU, PO DUTT NAGAR, NEAR NEW RELIANCE PETROL PUMP, RAMPUR BUSHAHR, HP - 172001

ROHRU

190. GOYAL MOTORS PVT LTD (JZNA-JZ-01), VILLAGE MEHENDLI, ROHRU - SHIMLA ROAD, ROHRU, HIMACHAL PRADESH - 171207

SHIMLA

191. MODERN AUTOMOBILES (A9NA-A9-S1) - 0

192. GOYAL MOTORS PVT LTD (A9NB-A9-01), RANJEET NAGAR , BHATTAKUFER , NEAR APPLE MARKET, SHIMLA - 171010

SOLAN

193. GOYAL MOTORS PVT LTD (7DNA-7D-S1) - 0

194. GOYAL MOTORS PVT LTD (7DNA-7D-01), DEONGHAT ,SOLAN, HIMACHAL PRADESH

UNA

195. COMPETENT AUTOMOBILES CO LTD (QDNA-QD-01), VILLAGE LAL SINGHI (OPPOSITE PRAKASH HONDA), NH 503, UNA, HIMACHAL PRADESH.

JAMMU AND KASHMIR

AKHNOOR

196. JAMMU MOTORS PVT LTD (2XNA-2X-01), KHASRA NO 680 MIN/52 KHEWAT NO 5/34 KHATA NO 90/203 MIN/204 MIN, BANGTI DASKAL, AKHNOOR, JAMMU

BARAMULLA

197. JAMKASH VEHICLEADES (KASHMIR) PVT LTD (8CNA-8C-01), KHUSHAL PORA, CHANAD, SANGRAMA, BARAMULLA, PIN-193202, JAMMU & KASHMIR - 193202

JAMMU

198. JAMKASH VEHICLEADES PVT LTD (33NB-33-01), NH-1A BYE PASS OPPOSITE CHANNI HIMMAT, JAMMU (J&K)

199. JAMMU MOTORS PVT LTD (33ND-33-01), KHASRA NO. 421, TOPE SHERKHANIA, AKHNOOR ROAD, OPPOSITE BEST PRICE, JAMMU, JAMMU & KASHMIR - 180016

KATHUA

200. JAMMU MOTORS PVT LTD (3BNA-3B-01), KHASRA NO 406/213/73, KHATA NO 1, KHEWAT NO 1, NATIONAL HIGHWAY, KALIBARI CHOWK, JAMMU AND KASHMIR

RAJAURI

201. JAMKASH VEHICLEADES PVT LTD (AINA-AI-01), 449/1,MAIN CHOWK MURADPUR - TEHSIL, RAJOURI

SRINAGAR

202. PEAKS AUTO PVT LTD (12NA-12-01), DR. ALI JAN ROAD, SOURA, SRINAGAR PIN - 190001 - 190001
PH :7006285604.

203. JAMKASH VEHICLEADES (KASHMIR) PVT LTD (12NB-12-S1) - 190001

204. COMPETENT KASHMIR AUTOMOBILES PVT LTD (12NC-12-01), KHASRA NO. 2745/1593/638 , KHEWAT NO. 352, MOUJA, BATAMALOO, SRINAGAR, J&K

JHARKHAND

BOKARO

205. HINDUSTAN AUTO AGENCY (B5NA-B5-01), KHATA NO. 752, PLOT NO. 7792, NH-32, CHAS, BOKARO. - 827013
PH :9304807318.

CHATRA

206. HINDUSTAN AUTO AGENCY (B5NA-B5-02), PLOT NO - 1110, 1111, 1112 ; KHATA NO 112,163,22 THANA – CHATRA, DIST - CHATRA JHARKHAND

CHIRKUNDA

207. RELIABLE INDUSTRIES (52NA-CQT-02), NEHRU ROAD , CHIRKUNDA - 828202

DALTONGANG

208. PREMSONS MOTOR UDYOG PVT LTD (MPNA-MP-01), RANCHI ROAD, NORTH REDMA MEDININAGAR PS DALTONGANJ, DIST PALAMU - 822102

DEOGHAR

209. PREMSONS MOTOR UDYOG PVT LTD (SGWN-SGW-01), PLOT NO 318/319 UNDER THANA NO 583,MAHESHMARA MOUJA ,DEOGHAR - 814112
PH :9835507004.

DHANBAD

210. RELIABLE INDUSTRIES (52NA-52-01), RELIABLE INDUSTRIES NEXA WORKSHOP AMAGHATA ,BY PASS ROAD SUGIADIH,PIN -828109 - 828109
PH :7992470853.

DUMKA

211. RELIABLE INDUSTRIES (L7NA-L7-01), TATA CHOWK,

GIRIDIH

212. RELIABLE INDUSTRIES (3DNA-3D-01), KHATA NO-51,PLOT NO-596,598 & 599, PO - PACHAMBA, GIRIDIH , JHARKHAND-815316

HAZARIBAGH

213. PREMSONS MOTOR UDYOG PVT LTD (Y9NA-Y9-01), PREMSON MOTOR UDYOG PVT LTD ,NEXA SHOWROOM NEXT TO GST OFFICE,ARYA NAGAR,HURHURU,HAZARIBAGH,JHARKHAND 825301 - 825301
PH :9835507004.

JAMSHEDPUR

214. MOTOR WORLD (A UNIT OF KALIMATI MOTORS PVT LTD) (31NB-31-01), NS-6, 2ND PHASE, ADITYAPUR INDUSTRIAL AREA, JAMSHEDPUR - 831013

215. PEBCO MOTORS LTD (31NA-31-01), KANDRA ROAD, ADITYAPUR INDUSTRIAL AREA, JAMSHEDPUR - 831013
PH :9334183260.

RAMGARH

216. HINDUSTAN AUTO AGENCY (AVNA-AV-01), KHATA NO -01, PLOT NO 195 MURRAMKALAN NEAR RAMGARH BAZAAR , RAMGARH JHARKHAND

RANCHI

217. PREMSONS MOTOR UDYOG PVT LTD (51NC-51-01), PLOT NO 2651/2652, KHATA NO 239, MAUJA, VILLAGE BARAGAI , BARIATU MAIN ROAD, RANCHI, JHARKHAND - 834009
PH :9334811248.

218. HILLTOP MOTORS (A UNIT OF HIRALAL MOTORS PRIVATE LIMITED) (51ND-51-01), PLOT NO. 967, 972, 973, 974, 975, BIRSA CHOWK, VILLAGE HINOO, RANCHI

219. HILLTOP MOTORS (A UNIT OF HIRALAL MOTORS PRIVATE LIMITED) (51ND-51-02), KATHALMORE, OPP. MANER DHABA, RANCHI - 834005

KARNATAKA

ANEKAL

220. PRATHAM MOTORS PVT LTD (FANA-FA-01), SY.NO.36/5,KAVALA HOSAHALLI,ANEKAL-CHANDAPURA MAIN ROAD,SIDIHOSAKOTE POST,ANEKAL TALUK,ANEKAL-562106. - 562106

BANGALORE

221. BIMAL AUTO AGENCY INDIA PVT LTD (02NL-02-01), NO.1, 3RD BLOCK, 2ND STAGE, NAGARABHAVI, OUTER RING ROAD, BANGALORE – 560072 - 560072

222. BIMAL AUTO AGENCY INDIA PVT LTD (02NC-02-01), SY.NO.9/04, NEAR KATAMANALLUR GATE, KANNAMANGALA, KADUGODI MAIN ROAD, BANGALORE - 560067
PH :9742269137.

223. BIMAL AUTO AGENCY INDIA PVT LTD (02NC-2-03), SY NO. 2/2, MARATHAHALLI TO KR PURAM OUTER RING ROAD, MAHADEVAPURA, K R PURAM HOBLI, BANGALORE

224. KALYANI MOTORS PVT LTD (02NI-02-01), SURVEY NO.17/2, KENCHENAHALLI VILLAGE, RAJARAJESHWARI NAGAR, MYSORE ROAD,BANGALORE, KARNATAKA - 560032
PH :9845049626.

225. KALYANI MOTORS PVT LTD (02NN-02-01), 152/7, OUTER RING ROAD, DODDA BANASWADI, HORAMAVU, KR PURAM HOBALI, BANGALORE -560043. - 560043
PH :9900020454.

226. MANDOVI MOTORS PVT LTD (02NJ-02-01), SURVEY NO.33/2,ALLALASANDRA, YELAHANKA NORTH, BANGALORE, KARNATAKA - 560064
PH :9513729888.

227. PRATHAM MOTORS PVT LTD (02NK-02-01), 120,SARJAPUR MAIN ROAD,DODDAKANAHALLI, VARTHUR HOBLI, BANGALORE EAST, KARNATAKA- 560035. - 560035
PH :8884000579.

228. SURAKSHAA CAR CARE PVT LTD (02NF-02-01), 2/6, BERTEN AGRAHARA, OPP TO METRO CASH & CARRY, HOSUR MAIN ROAD, ELECTRONIC CITY, BANGALORE, KARNATAKA - 560100
PH :9845047393.

229. VARUN MOTORS PVT LTD (02NG-02-01), NO.23/A, INDUSTRIAL SUBURB, 2ND STAGE, TUMKUR ROAD,YESHWANTPUR, BANGALORE, KARNATAKA- 560022. - 560022
PH :8971888885.

230. VARUN MOTORS PVT LTD (02NM-02-01), 37/56 NAGAVARA VILLAGE,HEBBAL RING ROAD ,BANGALORE - 560024
PH :9513394753.

231. KALYANI MOTORS PVT LTD (02NA-02-01), MUNICIPAL NO 1, EVEREST TALKIES, NEW WARD NO 78, PID NO 91-4-1,KENCHAPPA ROAD, FAZER TOWN, BANGALORE - 560005

232. SURAKSHAA CAR CARE PVT LTD (02NP-02-01), SY. NO.16/3, THALAGHATTAPURA VILLAGE, UTTARAHALLI HOBLI, BANGALORE, KARNATAKA

233. SURAKSHAA CAR CARE PVT LTD (02NP-02-02), #47/2, 80FT ROAD, BANASHANKARI 6TH STAGE, 4TH BLOCK, TURAHALLI, BANGALORE -56006 - 56006

234. VARUN MOTORS PVT LTD (02NO-02-01), OPP TO SOUTH EAST ASIAN TRUST, AYAPPA NAGAR,HOODI, KR PURAM,BANGALORE

235. KALYANI MOTORS PVT LTD (02NQ-02-01), SURVEY NO. 23/6,CHIKKABIDARAKALUU VILLAGE, ANCHAPALYA, DASANAPURA-HOBLI,BANGALORE NORTH TALUK BANGALORE - 560073,KARNATAKA.

BANGARPET

236. SURAKSHA (ORNA-OR-01), OPP TO SUGAR FACTORY, AMARAVATHI LAYOUT BUS STOP, KGF MAIN ROAD, BANGARPET - 563114

BELGAUM

237. SHANTESHA MOTORS PVT LTD (E8NA-E8-01), PLOT NO. 6/B, R.S NO. 34, BOUXIDE ROAD, KANGRALI B K, BELGAUM, KARNATAKA-590010. - 590010
PH :9538195381.

BELLARY

238. KPF PVT LTD (G2NA-G2-01), DOOR NO. 14&15, 1ST CROSS, GANDHI NAGAR, BELLARY- 583103 - 583103

BIJAPUR

239. CHAVAN MOTORS (KTK) PRIVATE LIMITED (T7NA-T7-S1) - 586109

240. CHAVAN MOTORS (KTK) PRIVATE LIMITED (T7NA-T7-01), R SY NO. 26/D1, KASABA VIJAYAPURA, BYE PASS CROSS, NH50 HIGHWAY ROAD, VIJAYAPURA (BIJAPUR) - 586109
PH :8799957100.

CHICKBALLAPUR

241. BIMAL AUTO AGENCY INDIA PVT LTD (KJNA-KJ-01), SY NO. 158 & 159, KANDAVARAKERE KASABA HOBLI, - 503224

CHITRADURGA

242. SAKETH AUTOMOBILES (ALNA-AL-01), SITE NO.4181/4024/10782/2, SAROJABHAI KALYANA MATAPA, NH-04 SERVICE ROAD, CHITRADURGA - 577501. - 577501

DAVANGERE

243. SHRUTI MOTORS PRIVATE LIMITED (S1NB-S1-01), AVARAGERE ROAD, OLD, PB RD, DAVANAGERE, KARNATAKA 577003 - 577003

DEVANHALLI

244. BIMAL AUTO AGENCY INDIA PVT LTD (02NL-WH-02), SURVEY NO 113,113/A, HISREAMANIKERE VILLAGE, KASABA HOBLI, DEVANAHALLI, BANGALORE RURAL DISTRICT - 562110

DHARWAD

245. RNS MOTORS PRIVATE LIMITED (BIXN-BIX-01), CTS NO. 29A/1, 29A/2, 29A/3, ASHOK NAGAR, GOA ROAD OPPOSITE PAVAN PARK, DODDNAYAKANA KOPPA DHARWAD - 580021

GADAG

246. RNS MOTORS PRIVATE LIMITED (RKNA-RK-01), SY NO. 48, BINKADAKATTI VILLAGE,GADAG, KARNATAKA.

GOKAK

247. SHANTESHA MOTORS PVT LTD (IRNA-IR-01), SY NO 106/3D/2 GOKAK- BELGAUM HIGHWAY

GULBARGA

248. LAHOTI MOTORS PVT LTD (E9NA-E9-01), #7-1211/A, OPP GUNJ BUS STAND HUMNABAD ROAD, GULBARGA - 585104

HASSAN

249. VENKAT MOTORS (C8NA-C8-01), KHATA NO 200-201, DM HALLY, BANGALORE - MANGALORE ROAD, HASSAN, KARNATAKA - 0

HOSKOTE

250. BIMAL AUTO AGENCY INDIA PVT LTD (SMNA-SM-01), SY NO. 102. NO.56, HOSAKOTE SANTE GATE FLYOVER, KAMMAVARI PETE, HOSKOTE, KARNATAKA - 562114

HOSPET

251. MUNEER ENTERPRISE PRIVATE LIMITED (MUNEER NEXA) (N7NA-N7-01), 7TH WARD, A.S. GUDI, HAMPI ROAD, HOSPET ROAD, HOSPET, KARNATAKA

HUBLI

252. RNS MOTORS PRIVATE LIMITED (73NC-73-01), SITE NO. 415/2A, P.B. UNKAL ROAD, HUBLI, KARNATAKA

KOLAR

253. MANDOVI MOTORS PVT LTD (02NJ-QU-02), KATHA NO2790,2790/1,PETECHAMANAHALI,KASABA HOBLI,KOLAR, KARNATAKA.

MANGALORE

254. MANDOVI MOTORS PVT LTD (45NA-45-01), SUMIT APARTMENT BUILDING, AIRPORT ROAD, MARY HILL, MANGLORE - 574142
PH :9845133077.
255. BHARATH AUTOCARS PVT LTD (45NB-45-01), GODOWN 17-106/P, V.S KUDVA ROAD,MAROLI, MANGALORE - 575005

MOODBIDRI

256. BHARATH AUTO CARS PVT LTD (HNNA-HN-01), BHARATH BEEDI COMPOUND, NEAR ALVA'S HOSPITAL, MOODBIDRI, KARNATAKA.

MYSORE

257. KALYANI MOTORS PVT LTD (25NC-25-01), PLOT NO.262, HEBBAL INDUSTRIAL AREA, MYSORE, KARNATAKA- 570016. - 570016
258. MANDOVI MOTORS PVT LTD (25NA-25-01), SURVEY NO. 90/7, RT NAGAR, RING ROAD, DATTAGALLY, MYSORE, KARNATAKA -570023 - 570023

NEELAMANGALA

259. RNS MOTORS PVT LTD (BBHN-BBH-01), SY NO. 216/9, KASABA HOBLI, KUNIGAL BYPASS ROAD, NEELAMANGALA TALUK,BANGALORE RURAL DISTRICT. - 562123

PUTTUR

260. BHARATH AUTOCARS PVT LTD (CZNA-CZ-01), PLOT NO. 5-28/4, NEAR GOWDA SAMAJ HALL, BYEPASS ROAD, TENKLA, PUTTUR -574201.

SAGARA

261. SHRUTI MOTORS PRIVATE LIMITED (WFNA-WF-01), NEAR INDIAN OIL PETROL BUNK,BASAVANA HOLE, JAMBAGARU, SAGARA, KARNATAKA - 577401

SHIMOGA

262. SHRUTI MOTORS PRIVATE LIMITED (B7NB-B7-01), 217/215/91/79/1, OPP TO FOREST OFFICE, SHANTI NAAGARA, HONNALI ROAD, SHIMOGA,KARNATAKA - 577201

SIRSI

263. RNS MOTORS PVT LTD (MQNA-MQ-01), SY NO,260/A5, SHIVA COMPLEX,NEJJUR COMPO, BANAVASI ROAD. TALUK SIRSI, KARNATAKA

UDUPI

264. ABHARAN MOTORS PVT LTD (G6NA-G6-01), SY NO. : 94/35 & 94/18B, UPPOR VILLAGE, UDUPI, KARNATAKA. - 576105

KERALA

ALLEPPEY

265. POPULAR VEHICLES & SERVICES LTD (E5NB-E5-01), 12/287A, PARAVOOR, ALLEPPEY - 0

CALICUT

266. A M MOTORS (47NA-47-01), 18/1472, OPP TO COMTRUST EYE HOSPITAL,SRAMBIKKAL PARAMBA,MINI BYPASS JAIL ROAD JUNCTION,PUTHIYARA POST,CALICUT, KERELA-673004. - 673004
PH :7708833966.
267. POPULAR VEHICLES & SERVICES LTD (47NB-47-01), BYPASS SERVICE ROAD, BEHIND JAYA ARCADE, THONDAYADU, CALICUT, KERALA - 673017
PH :9946104660.
268. BIMAL AUTO AGENCY INDIA PVT LTD (47NC-47-01), KTC NAGAR (OLD FORD SHOWROOM), CALICUT ROAD, MEENCHANDA, KOZHIKODE, KERALA 673018

COCHIN

269. INDUS MOTOR COMPANY PVT LTD (27NC-27-01), NH 47,THAIKATTUKARA PO,THAIKAVU, ALUVA, COCHIN - 683106 - 683106
PH :9747508822.
270. SAI SERVICE PVT LTD (27NA-27-01), 723/7,6,18,OPP TO HOTEL AARYAS, SEAPORT-AIRPORT, POOJARY VALAVU, KANAYANNOOR TALUK, THIRRAKKARA NORTH, COCHIN-682021. - 682021
PH :9645106193.
271. GEORGE MAIJO AUTOMOBILES PVT LTD (27ND-27-01), 32/1219,THIRAKKAKARA MUNICIPALITY, CIVIL LINE ROAD,VAZHAKALA JUNCTION, COCHIN
272. POPULAR VEHICLES AND SERVICES (27NB-27-01), MANAKKAPPADY JN, IRUMPANAM, COCHIN

KAIPAMANGLAM

273. SAI SERVICE PRIVATE LIMITED (RPNA-RP-01), EDAMUTTOM, EDAMUTTOM, P.O, KAIPAMANGALAM RD, THRISSUR

KANNUR

274. KVR AUTO MALL PVT LTD (K1NA-K1-01), SURVEY NO. 54/2, BYE PASS ROAD KANNUR-KOZHIKODE, ELAYAVOOR VILLAGE, KUZHUTHALY DESAM, KANNUR TALUK

KASARGOD

275. INDUS MOTOR COMPANY PVT LTD (3LNA-3L-01), SURVEY NO.384/3C,10, MUTTATHODY VILLAGE, INDIRA NAGAR, CHENGALA POST, KASARGODE, KERALA-671541 - 671541

KATTAPPANA

276. BIMAL AUTO (ZNNA-ZN-01), SERIAL NO. 53/14, OPP. VELLAYAMKUDI POST OFFICE, THODUPUZHA - PULIYANMALA ROAD, VELLAYAMKUDI, KATTAPPANA, KERALA - 685515

KAYAKULAM

277. SAI SERVICE PVT LTD (8LNA-8L-01), SAI SERVICE PVT LTD, WEST OF RAILWAY BRIDGE, K P ROAD, KAYAMKULAM, PIN : 690502 - 690502
PH :9288024222.

KODANGALLUR

278. SAI SERVICE PVT LTD (8KNA-8K-01), SURVEY NO. 506/3-2, KODUNGALLUR, THRISSUR

KOLLAM

279. SARATHY CARS PVT LTD (C7NA-C7-01), NH-47 BYE PASS ROAD, AYATHIL.P.O KOLLAM DIST, KERALA STATE PIN 691021 - 691021
PH :9848659456.

KOTTAYAM

280. AVG MOTORS LTD (B8NA-B8-01), SY. NO. 182/3,182/4, WARD NO. 10, PEROOR VILLAGE, ETTUMANOOR MUNICIPALITY, KOTTAYAM - 686630
281. SAI SERVICE PVT LTD (B8NB-B8-01), SY. NO. 341/11, 341/12, PERUR VILLAGE, MC ROAD, THELLAKOM, KOTTAYAM - 686630

MUVATTUPUZHA

282. INDUS MOTOR COMPANY PVT LTD (7ENA-7E-01), NELLIPPILLIL HOUSE, ADOOPARAMBU, MUVATTUPUZHA P.O., ERNAKULAM. - 686661

PALA

283. AVG MOTORS LTD (GNNA-GN-01), SURVEY NO 11/37,BLOCK NO -80, PULIYANNOOR VILLAGE, PALA MUNICIPALITY, KOTTAYAM DISTRICT, KERALA.

PALAKKAD

284. INDUS MOTORS (Y2NA-Y2-01), SURVEY NO. 133,135, NEARBY MOYANS SCHOOL, PALAKKAD CITY, KERALA.

TALIPARAMBA

285. POPULAR VEHICLES & SERVICES LTD (9WNA-9W-01), SY NO. 34/196 & 34/207, NH-66, TALIPARAMBA, KERALA - 670141

THIRUVANANTHAPURAM

286. INDUS MOTOR COMPANY PVT LTD (16NB-16-01), OPPOSITE EVM ASHOK LEYLAND,ALUMOOD JN,NH 47,KANNIYAPURAM, TRIVANDRUM - 695301. - 695301
PH :9656685678.

287. POPULAR VEHICLES & SERVICES LTD (16NC-16-01), SURVEY NO 39,40,59 & 75, NEAR LOURDE FORANE CHURCH, NEAR PMG JN, TRIVANDRUM - 695004

THRISSUR

288. BRD CARWORLD LIMITED (A4NA-A4-S1) - 0

289. POPULAR VEHICLES & SERVICES LTD (A4NB-A4-01), SURVEY NO 62/P, CHUNGAM,OLLARI, KANJANI ROAD, ARANATTUKARA VILLAGE, THRISSUR - 680618 - 680618

290. BRD CARWORLD LIMITED (A4NA-A4-01), CHIYYARAM VILLAGE , VILLAGE THRISSUR

MADHYA PRADESH

ASHOK NAGAR

291. PREM MOTORS PVT LTD (DSNA-DS-01), WARD NO 1 , KHASRA NO 67/2/3 , NEAR RAJMATA CHAURAHA , GUNA BYPASS ROAD , AKSHARDHAM COLONY , ASHONAGAR

BHOPAL

292. JEEWAN MOTORS PVT LTD (03NB-03-S1) - 0

293. OCEAN MOTORS PVT LTD (03ND-03-S1) - 0

294. OCEAN MOTORS PVT LTD (03ND-03ND-01), PLOT NO-54 & 55, SECTOR-A, GOVINDPURA INDUSTRIAL AREA, JK ROAD, BHOPAL

295. RAJRUP MOTOR JUNCTION (A UNIT OF RMJ MOTORS PVT LTD) (03NC-`03-01), 42, 6_BLOCK, BHEL INDUSTRIAL ESTATE, HABIBGANJ, HOSHANGABAD ROAD, BHOPAL (M.P.)

296. RAJRUP MOTOR JUNCTION (A UNIT OF RMJ MOTORS PVT LTD) (03NC-03-S2)

297. RAJRUP MOTOR JUNCTION (A UNIT OF RMJ MOTORS PVT LTD) (03NC-03-S1) - 0

BIAORA

298. UNITARA (0FNA-0F-01), 38/9/3, GRAM PADONIYA, OLD A.B ROAD, BIAORA (M.P.). - 465674

CHHINDWARA

299. KAMTHI MOTORS LLP (U5NA-U5-01), WARD NO.16, MAHATMA GANDHI WARD, SEONI PRAN MOTI, SEONI ROAD, CHHINDWARA (M.P.) - 480001

DAMOH

300. ADINATH CARS PVT LTD (RDNA-RD-01), KHASRA NO. 39/11/2/2, GRAM HIRDAYPURA, SAGAR NAKA, DAMOH, MADHYA PRADESH - 470661 - 470661

DATIA

301. PREM MOTORS (WENA-WE-01), NEAR TATA COMMERCIAL SERVICE STATION, JHANSI ROAD, DATIA (MADHYA PRADESH) - 475661

DEPALPUR

302. OCEAN MOTORS PVT LTD (WBNA-WB-01), SURVEY NO. 27/1 TAKIPURA, BETMA ROAD, DEPALPUR, INDORE, MADHYA PRADESH - 453115

DEWAS

303. UNITARA MOTORS PVT LTD (3QNB-3Q-01), 3, YAMUNA NAGAR, AB ROAD, DEWAS 455001 - 455001

304. UNITARA MOTORS PVT LTD (3QNB-3Q-S1)

DHAR

305. RUKMANI MOTORS PVT LTD (LMNA-LM-01), SURVEY NO.-472/2/1, VILLAGE JETPURA, DHAR (M.P.)

GUNA

306. PREM MOTORS PVT LTD (S3NA-S3-01), SURVEY NO. 352, KASHONDA, AB ROAD, GUNA (M.P.)

GWALIOR

307. NIKUNJ MOTORS (A UNIT OF RSKS AUTOMOTIVES PVT. LTD.) (30NB-30-01), MAHARANA PRATAP CHOWRAHA, GOLE KA MANDIR, GWALIOR, MADHYA PRADESH. - 474005

308. PREM MOTORS PVT LTD (30NA-30-S1) - 0

309. PREM MOTORS PVT LTD (30NA-30-01), SURVEY NO 442/2 , JHANSI ROAD , MAHAGAON , GWALIOR

INDORE

310. OCEAN MOTORS PVT LTD (53NB-53-01), BICHOLI MARDANA NEAR SAMPATH PALACE OPP HOTEL PRIDE - 452001

311. PATEL MOTORS (INDORE) PVT LTD (53NA-53-01), 1105/1528/5/2, MIN-1 AND 1105/1528/4/5, GRAM: KHAJRANA, DISTRICT: INDORE, KANADIA ROAD, INDORE (M.P.) - 452016
PH :7771002581.

312. RANA MOTORS PVT LTD (53ND-53-01), LASUDIA MORI, DEWAS NAKA, INDORE, PIN CODE 452010 - 452010
PH :9933055539.

313. RUKMANI MOTORS PVT LTD (53NC-53-01), RUKMANI MOTORS NEXA SERVICE,FOOTHI OTHI SQUARE,OPP.DASTOOR GARDEN,INDORE - 452002
PH :9755512100.

314. RUKMANI MOTORS PVT LTD (53NC-53-S1) - 0

315. RUKMANI MOTORS PVT LTD (53NC-53-02), 370/1/5/2P, IN FRONT OF BHARAT PETROL PUMP, NEMAWAR ROAD, PALDA, INDORE (M.P.)

JABALPUR

316. SHUBH VEHICLES LLP (54ND-54-S1) - 0

317. SHUBH VEHICLES LLP (54ND-54-01), 297/1 4 MILE LAL BUNGLOW TILHARI JABALPUR - 482020

318. STANDARD MOTOCORP PVT LTD (54NC-54-01), KHARSA NO-529/1/1 ,NEAR TRIPURI CHOWK GARHA JABALPUR M. P - 482003
PH :9773543358.

319. STANDARD MOTOCORP PVT LTD (54NC-54-03), UKHARI TIRAHA, OPPOSITE TO RAMESHWARAM WATER TANK, MR-4 ROAD, VIJAY NAGAR, JABALPUR (M.P.)

KATNI

320. SHUBH VEHICLES LLP (FKNA-FKN-01), KHASARA NUMBER 24/2, 25/1 PANNA MOD, MAIHAR ROAD, NEAR JOHN DEER REACTOR AGENCY, KATNI (MP)

KHARGONE

321. NIMAR MOTORS PRIVATE LIMITED (NEXA DIVISION) (AUNA-AU-01), SANAWAD ROAD ,JETAPUR KHARGONE - 451001

KUKSHI

322. OCEAN MOTORS PVT LTD (BION-BI-01), PLOT NO 464 , VINAYAK COMPLEX INDORE KUKSHI ROAD

MANDLA

323. STANDARD AUTO (WDNA-WD-01), KHASRA NO-44/1, BINJHIA, JABALPUR ROAD, MANDLA, MADHYA PRADESH-481661.

MANDSAUR

324. PATEL MOTORS (INDORE) PVT LTD (WCNA-WC-01), SURVEY NO 362/6, OPP KRISHI UPAJ MANDI, MHOW NEEMUCH ROAD, MANDSAUR (MP).

MORENA

325. PREM MOTORS PVT LTD (RGNA-RG-01), OPP. SHREE BAJRANG DHARAMKANTA, A B ROAD, MORENA, MP - 476001

NEEMUCH

326. PATEL MOTORS (INDORE) PVT LTD (3TNA-3T-01), KHASRA NO -1973/1&1975/2, MHOW - NEEMUCH ROAD, NEEMUCH - MADHYA PRADESH - 458441

SAGAR

327. ADINATH CARS PVT LTD (G1NA-G1-01), KHASRA NO 155, P H NO. -77, BAHERIA GADGAD,
SAGAR JABALPUR ROAD, SAGAR - 470004, MADHYA PRADESH, INDIA - 470004
PH :9752447690.

SANWER

328. RANA MOTORS PVT LTD (CWXN-CW-01), SURVEY NO. 217, KUDANA ROAD BYPASS, SANWER (MP).

SATNA

329. CITY CARS (A UNIT OF AGARWAL WHEELS PVT LTD) (D7NA-D7-01), BEHIND NEXA SHOWROOM, 666/2, AMOUDHA, PANNA ROAD, SATNA, MADHYA PRADESH - 485001
PH :6262230999.

SHAHDOL

330. STANDARD MOTOCORP PVT LTD (SFAN-SAF-01), KHASRA NO-459, VILLAGE JAMUI NEAR BAGHEL DHABA, BUDHAR ROAD, SHAHDOL (M.P.)

SINGRAULI

331. CITY CARS (A UNIT OF AGARWAL WHEELS PVT LTD) (JJNA-JJ-01), KHASRA NO.- 3055, NAUGARD TEHSIL, SINGRAULI (MP)

UJJAIN

332. YUG CARS (A UNIT RUKMARANI MOTORS PVT LTD) (3WNA-3W-01), 59/1, DEWAS ROAD, ADARSH NAGAR, NAGZIRI, UJJAIN - 456664
PH :9755512100.

333. YUG CARS (A UNIT RUKMARANI MOTORS PVT LTD) (3WNA-3W-02), 1/2/3, UJJAIN DEWAS ROAD, UJJAIN, MADHYA PRADESH. - 456001

VIDISHA

334. RAJRUP MOTOR JUNCTION (A UNIT OF RMJ MOTORS PVT LTD) (AYNA-AY-01), PLOT NO.349-3 (RG.NO.239/1, 240,242), AHMADPUR CHAURAHA, WARD NO. 29, VIDISHA (MP)

MAHARASHTRA

AHMEDNAGAR

335. KANKARIYA AUTOMOBILES PVT LTD (A5NA-A5-01), SH-60,NEWASA ROAD ,NAGARDEOLE,AHEMDANAGAR,MAHARASTRA - 414601
PH :9403961522.

AKOLA

336. ASPA BANDSONS AUTO PVT LTD (F1NA-F1-01), SHIVANI AIRPORT AREA, AKOLA - MAHARASHTRA (444001) - 444001

ALANDI

337. MY CAR (PUNE) PVT LTD (GJPN-GJP-01), SURVEY NO 214/1, PUNE ALANDI ROAD, KALE WASTI , VILLAGE CHARHOLI BURDUK , ALANDI - 412105

ALIBAG

338. SIMRAN MOTORS PVT LTD (3XNA-3X-01), 31/1/B MOUJE VESHWI , GRAM PANCHAYAT VESHWI, TALUKA ALIBAUG, DISTT RAIGAD

AMRAVATI

339. ASPA BANDSONS AUTO PVT LTD (F2NA-F2-01), F32/1 MIDC , AURANGABAD NAGPUR EXPRESS HIGHWAY, AMRAVATI, MAHARASHTRA - 444607 PH :9130041513.

AURANGABAD

340. AUTOMOTIVE MANUFACTURERS PVT LTD (21NB-21-01), PLOT NO :- L- 3 / 1 , BETWEEN GARWARE & WOCKHARDT LTD, JALGAON ROAD, MIDC CHIKALTHANA,AURANGABAD PIN : - 431006, MAHARASHTRA - 431006 PH :9970499273.

341. PAGARIYA AUTO PVT LTD (21NA-21-01), OPP AIRPORT, NEXT TO INDIAN OIL PETROL PUMP, JALNA ROAD, AURANGABAD, MAHARASHTRA - 431006 PH :8888859502.

BADLAPUR

342. AHER AUTOPRIME LLP (9ONA-9O-01), MUKTA AUTOMOBILES, BHARAT COLONY, NEAR SHANTI NAGAR, WATER TANK ROAD, BADLAPUR WEST 421503 - 421503

BARAMATI

343. MAHALAXMI AUTOMOTIVES VEHICLES PVT LTD (7RNA-7R-01), BHIGWAN ROAD, SHIV NAGAR, BARAMATI (MAHARASHTRA) PH :9850994014.

CHANDRAPUR

344. BARBATE AUTOMOTIVE (INDIA) PVT LTD (H3NA-H3-01), PLOT NO 15-18, OUT OF SURVEY NO 14/4, 15/5, MAUZA BADOLI, NAGPUR CHANDRAPUR HIGHWAY, CHANDRAPUR, MAHARASHTRA - 440025 PH :8380887666.

345. BARBATE AUTOMOTIVE (INDIA) PVT LTD (H3NA-H3-S1) - 0

CHIKHLI

346. KATARIA AUTOMOBILES (BCBN-BCB-01), SURVEY NO. 678/5 AND 7, NEAR SHIV KRUPA HOTEL, NH 48 HIGHWAY, THALA, CHIKHLI, GUJARAT - 396521 - 396521

DHULE

347. SEVA AUTOMOTIVE PRIVATE LIMITED (P3NA-P3-01), PLOT NO. F-1, ADDITIONAL DHULE INDUSTRIAL AREA, DHULE, MAHARASHTRA - 424006

GONDIA

348. BARBATE AUTOMOTIVE (INDIA) PVT LTD (20NA-4C-03), HIMGIRI LAYOUT , KAWLEWADA ROAD , GONDIA - 795140

INDAPUR

349. MAHALAXMI AUTOMOTIVES VEHICLES PVT LTD (NQNA-NQ-01), GAT NO 212/1/B, PUNE SOLAPUR ROAD , INDAPUR, DISTRICT PUNE

JALGAON

350. MANRAJ AUTOMOBILES PVT LTD (C4NB-C4-01), P 93, MIDC, R L CHOWK, AJANTA ROAD, JALGAON, MAHARASHTRA – 425003 - 425003

JALNA

351. AUTOMOTIVE MANUFACTURERS (BCNA-BC-01)

KALYAN

352. AHER AUTOPRIME LLP (IXNA-IX-01), SHOP NO-2, ALLIANCE HERITAGE, NEXT TO RELIANCE PETROL PUMP, KON GAON, KALYAN-BHIWANDI ROAD, TAL - BHIWANDI 421311 - 421311

KHARGHAR

353. SIMRAN MOTORS PVT LTD (AACN-AAC-01), 60/72, JAWAHAR COOPERATIVE INDUSTRIAL ESTATE, KALAMBOLI, KHARGHAR, MUMBAI, MAHARASHTRA. - 410209

KOLHAPUR

354. SAI SERVICE PVT LTD (38NA-38-01), 1243/66, E WARD, SHIVAJI UDHYAMNAGAR, KOLHAPUR - 416001 PH :9923208401.

355. SAI SERVICE PVT LTD (38NA-38-02), PLOT NO. C-6, SHIROLI MIDC, KOLHAPUR, MAHARASHTRA.

LATUR

356. AUTOMOTIVE MANUFACTURERS PVT LTD (V8NA-V8-01), C-4/1319/1, SURVEY NO. 89/C, RING ROAD BETWEEN BABHALGAON CHOWK AND GARUD CHOWK, PO & DIST LATUR, MAHARASHTRA - 413512 - 413512

LONAVALA

357. SEHGAL AUTORIDERS PVT LTD (CGAN-CG-01), GALI NO. 735/1, WAKSAI,LONAVALA, TALUKA MAVAL, DISTRICT PUNE , MAHARASHTRA-410405 - 410405

MANGAON

358. MY CAR (PUNE) PVT LTD (BAMN-BA-01), SHOP NO 17,18,19,20, SURVEY NO 55/1 , 55/2 MUMBAI GAO HIGHWAY, TAHSIL MANGAON, DISTRICT RAIGAID

MUMBAI

359. FORTPOINT AUTOMOTIVE (CARS) PVT LTD (05NJ-05-S1) - 0

360. KTS AUTOMOTORS PVT LTD (05NH-05-01), UNIT NO A1, PANNALAL COMPOUND, LBS KANTILAL MAGANLAL ESTATE, L.B.S MARG, BHANDUP (W), MUMBAI - 400078

361. MY CAR (PUNE) PVT LTD (05NK-05-01), PLOT NO- GEN-25 & GEN-25 B/1, TTC INDUSTRIAL AREA, PAWANE, NAVI MUMBAI, MAHARASHTRA (400709) - 0

362. MY CAR (PUNE) PVT LTD (05NK-05-S1) - 0

363. MY CAR (PUNE) PVT LTD (05NL-05-01), PLOT NO. B-21 & B-24/1, THANE INDUSTRIAL AREA, THANE, MAHARASHTRA - 400604

364. SAI SERVICE PVT LTD (05NB-`05-01), JOSEPH CARDIJN TECHNICAL SCHOOL , KHASHABA JADHAV MARG , OFF DR. AMBEDKAR ROAD , DADAR (EAST) MUMBAI, MAHARASHTRA. - 400014

365. SHIVAM AUTOZONE INDIA PVT LTD (05ND-05-S1) - 0

366. SHIVAM AUTOZONE INDIA PVT LTD (05NE-05-01), PLOT NO. 1 & 2, RAMCHANDRA LANE EXTN., KANCHPADA, OFF LINK ROAD, MALAD-WEST. - 400064 PH :9870938888.

367. SHIVAM AUTOZONE INDIA PVT LTD (05ND-`05-01), PLOT NO SILVER HOUSE, 110 MIDC, ROAD NO 13, MAROL, ANDHERI (EAST), MUMBAI, MAHARASHTRA. - 400069

NAGPUR

368. BARBATE AUTOMOTIVE (INDIA) PVT LTD (20NA-20-01), 37/2, MANISH NAGAR, BESA T POINT, BESA ROAD NAGPUR 440025 - 440025

369. BARBATE AUTOMOTIVE (INDIA) PVT LTD (20NA-20-02), C-48/1, MIDC HINGNA MAIN ROAD, WADI, NAGPUR, PIN-440028, MAHARASHTRA. - 440028

370. ARUN MOTORS PRIVATE LIMITED (20ND-20-01), PATNI ARCADE , C-48/1, MIDC HINGNA MAIN ROAD , NAGPUR - 440028

NANDED

371. SEVA AUTOMOTIVE PRIVATE LIMITED (68NA-68-01), AIRPORT ROAD,SANGVI - 431605 PH :7065026520.

NARAYANGAON

372. KOTHARI AUTO WHEELS PRIVATE LIMITED (FVNA-FY-01), WARULWADI, NH-50, NARAYANGAON - 410504

NASHIK

373. SEVA AUTOMOTIVE PRIVATE LIMITED (37NA-37-01), PLOT B-17, MIDC, AMBAD, NASIK, MAHARASHTRA - 422010 PH :8975762303.

374. SHAAN CARS PVT LTD (37NB-37-01), PLOT E-2, MIDC SATPUR, NASHIK, MAHARASHTRA - 422010

375. AUTOMOTIVE MANUFACTURERS LIMITED (37NC-37-01), PLOT NO P/1/2 , MIDC , AMBAD ,NASHIK - 422010

PALGHAR

376. SAI SERVICE PVT LTD (TENA-TE-01), MAHAVIR NIRMAN, RAILWAY STATION ROAD, PALGHAR.

PANDARPUR

377. CHAVAN MOTORS DIVISION INDIA PVT LTD (0HNA-0H-01), GAT NO. 94/1/42 & 94/1/43, ISBAVI, WAKHARI ROAD, PANDHARPUR, DISTRICT SOLAPUR, MAHARASHTRA - 413304 - 413304

PARBHANI

378. PAGARIYA AUTO PVT LTD (LNNA-LN-01), PLOT NO. 857, OPPOSITE IOC PUMP, BASMAT ROAD, PARBHANI

PHALTAN

379. CHOWGULE INDUSTRIES PVT LTD (KHNA-KH-01), SR NO 83/2A/A2 , PUNE PANDHARPUR ROAD , PHALTAN, DIT SATARA

PUNE

380. EXCELL AUTOVISTA PVT LTD (19NG-19-01), SURVEY NO 98/2A/P, NEW PUNE - MUMBAI HIGHWAY, NEAR BALEWADI STADIUM, BANER TALUKA, PUNE - 411045

381. KOTHARI AUTO WHEELS PRIVATE LIMITED (19NJ-19-01), GATE NO 1605, OLD 1099, KESNAND ROAD, WAGHOLI, TAL-HAVELI, DISTRICT - PUNE, MAHARASHTRA - 412207

382. MAHALAXMI AUTOMOTIVES VEHICLES PVT LTD (19NI-19-01), NEAR SADGURU PETROL PUMP, PUNE NASHIK HIGHWAY, AT KURALI, KHED TALUKA, CHAKAN, PUNE - 410501 PH :9923589214.

383. MY CAR (PUNE) PVT LTD (19NA-19-S1) - 0

384. SAI SERVICE PVT LTD (19NC-19-01), SINHAGAD ROAD, NEAR NANDED CITY, VADGAON KHURD, PUNE.(MAHARASHTRA) PH :9923308333.

385. SEHGAL AUTORIDERS PVT LTD (19NE-19-01), SURVEY NO 63/2, SHEWALEWADI, MANJARI BUDRUK, PUNE SOLAPUR HIGHWAY, PUNE, MAHARASHTRA - 412307 PH :9158000049.

386. WONDER CARS PVT LTD (19ND-19-S1) - 0

387. WONDER CARS PVT LTD (19ND-19-01), PLOT NO 52/1 BLOCK F2, MIDC PIMPRI, PUNE - 411019 PH :9850094151.

388. CHOWGULE INDUSTRIES PVT LTD (19NH-19-01), 43/1, OFF KARVE ROAD, KOTHRUD, OPPOSITE LILAVATI APARTMENT, PUNE - 111045

PUNE (AMBEGAON)

389. MY CAR (PUNE) PVT LTD (19NM-19-01)

RATNAGIRI

390. JAGRUT MOTORS PVT LTD (G3NA-G3-01), 410/6/1B, SALVI STOP, SHIVAJI NAGAR MAIN ROAD RATNAGIRI, MAHARASHTRA - 415612 PH :9820039626.

SANGAMNER

391. MAHALAXMI AUTOMOTIVES VEHICLES PVT LTD (HENA-HE-01), AHMADNAGAR

SANGLI

392. CHOWGULE INDUSTRIES PVT LTD (J1NA-J1-01), 118/2/1 KUBERA CHAMBERS, MAHAVIRNAGAR, SANGLI (MAHARASHTRA) - 416416
393. CHOWGULE INDUSTRIES PVT LTD (J1NA-J1-S1) - 0

SASWAD

394. CHOWGULE INDUSTRIES PVT LTD (PHNA-PH-01), SURVEY NO. 611/1, NEAR INDIAN OIL PETROL PUMP, VILLAGE SASWAD, PUNE, MAHARASHTRA - 412301

SATARA

395. CHOWGULE INDUSTRIES PVT LTD (F3NA-F3-01), GATE NO 158/1/5/B, PROPERTY NO.823, NEAR VIGHANHARTA SOCIETY COLONY B, MEDHA ROAD, AT/POST-KONDAVE, TALUKA-SATARA

SHIKRAPUR

396. KOTHARI AUTO WHEELS PRIVATE LIMITED (GKJN-GKJ-01), GAT NO. 1491/1B, PUNE NAGAR ROAD, SHIKRAPUR, TALUKA SHIRUR, PUNE - 412208 - 412208

SHILPHATA

397. VELOX MOTORS PRIVATE LIMITED (SGJN-SGJ-01), PLOT NO. 99, KALYAN SHIL ROAD, SHILPHATA. - 410203

SINNAR

398. SHAAN CARS PVT LTD (FUNA-FU-01), SURVEY NO 932/2, NEAR UDYOG BHAVAN, SINNAR, MAHARASHTRA - 422103 - 422103

SOLAPUR

399. CHAVAN MOTORS DIVISION INDIA PVT LTD (B1NA-B1-01), SURVEY NO. 534/4, BALE PUNE ROAD, SOLAPUR, MAHARASHTRA - 413224 - 413224
PH :8888881314.

TALEGAON DABHADE

400. MY CAR (PUNE) PVT LTD (4KNA-4K-01), SR. NO. 408/8, OLD MUMBAI FUNE HIGHWAY, LIMB PHATA, TALEGAON DABHADE, TAL - MAVAL, DIST. - PUNE

THANE

401. AUTOMOTIVE MANUFACTURERS PVT LTD (39NB-39-01), NERUL, MUMBAI PUNE HIGHWAY, NAVI MUMBAI - 400706
PH :9769206120.
402. AUTOMOTIVE MANUFACTURERS PVT LTD (39NB-39-S1) - 400706
403. EXCELL AUTOVISTA PVT LTD (39NA-39-01), MOHAN MILL COMPOUND, GHODBUNDER ROAD , THANE , MAHARASTHRA - 400607
PH :9967331726.
404. EXCELL AUTOVISTA PVT LTD (39NA-39-02), NEAR ARIHANT COMPOUND, KALHER, BHIWANDI, THANE - 400607
PH :9967331726.
405. KIRAN MOTORS MAHARASHTRA (A DIVISION OF KIRAN MOTOS LIMITED) (39ND-39-01), BHOIR COMPOUND, FOUNTAIN JUNCTION, OFF NATIONAL HIGHWAY 8, VILLAGE - VARSOVA, GHODBUNDER, DISTRICT - THANE (MAHARASHTRA) 401104 - 401104
406. SUPREME AUTOMOBILES (A UNIT OF RELIABLE AUTOMOTIVE PVT LTD) (39NE-39-01)

WADA

407. SHIVAM AUTOZONE INDIA PVT LTD (BXDN-BXD-01), NO. 417/15, NEAR SNEH GARDEN, VILLAGE GANDHARE, WADA KUDUS BHIWANDI ROAD, WADA, DISTRICT PALGHAR, MAHARASHTRA - 421303

YAVATMAL

408. HIMALAYA CARS (4MNA-4M-01), PLOT NO. 14, MIDC, YAVATMAL INDUSTRIAL AREA, YAVATMAL

MANIPUR

IMPHAL

409. EASTERN MOTORS (74NA-74-01), NEW PATTA NO.30, DAG NO. 99, ASIAN HIGHWAY 1(NH 102) , IMPHAL. - 795140

NAGALAND

DIMAPUR

410. PROGRESSIVE MOTORS (32NA-32-01), OPPOSITE AIRPORT, N.H.39, DIMAPUR KOHIMA ROAD, DIMAPUR OPPOSITE AIRPORT, N.H.39, DIMAPUR KOHIMA ROAD, - 797115
PH :7669223736.

KOHIMA

411. SEYIE AUTO (4NNB-4N-01), NEAR IG STADIUM, MARIEMA, KOHIMA, NAGALAND - 797001

ODISHA

BALASORE

412. JYOTE MOTORS (BALASORE) PVT LTD (L5NA-L5-01), PLOT NO: 385, GANESWARPUR, REMUNA, JANUGANJ,BALASORE, ODISHA 756019 - 756019

BARIPADA

413. JYOTE MOTORS PRIVATE LIMITED (RQNA-RQ-01), KARTABASHA , WARD NO 32 BALASORE JHARPOKRIA ROAD , BAGDIHA , BARIPADA - 757001

BERHAMPUR

414. SKY AUTOMOBILES (E2NA-E2-01), PLOT NO 373/2229 & 373/1204, AMABAPUA MOUZA, BRAHMAPUR (ODISHA) - 760007

BHUBANESHWAR

415. JYOTE MOTORS PVT LTD (04NA-04-S1) - 0
416. NARAYANI MOTORS PVT LTD (04NC-04-01), PLOT NO 140/2004, KHATA NO -1152/364, UNIT-20, JAGAMARA, KHANDGIRI, CHAWAK, BHUBANESHWAR - 0
417. NARAYANI MOTORS PVT LTD (04NC-04-S1) - 0
418. SKY AUTOMOBILES (04NB-04-01), BAPUJI NAGAR, SHREE VIHAR CHANDRASEKHARPUR ROAD, BHUBANESWAR - 751017 - 751017

BHUBANESWAR

419. TUSHI MOTORS PRIVATE LIMITED (04ND-04-01), IDCO SHED NO.: B/18, UNIT NO.: 12, BOMIKHAL, PS.: RASULGARGH - 751010

JEYPORE

420. LEGEND CARS PRIVATE LIMITED (SWNA-SW-01), NH26, OPPOSITE HOTEL HELLO, INDUSTRIAL ESTATE, JEYPORE, ODISHA

JHARSUGUDA

421. ODYSSEY MOTORS PVT LTD (D4NA-BJU-02), POWER HOUSE ROAD, SARBAHAL,JHARSGUDA-768201 (ODISHA) - 768201

PARADEEP

422. NARAYANI MOTORS PVT LTD (OENA-OE-01), DO-CHHAKI, PARADEEP - CHANDIKHOL RD, PARADEEP, ODISHA 754141

ROURKELA

423. ORBIT MOTORS PVT LTD (87NA-87-01), PLOT NO 5G/3, VED VYAS, SUNDARGARH, ROURKELA - 769041
PH :9165071234.

SAMBHALPUR

424. ODYSSEY MOTORS PVT LTD (D4NA-D4-01), SAMBALPUR, CHOWK, REMED, ODISHA 768006 - 768006

ORISSA

JAJPUR

425. SKY AUTOMOBILES (RZNA-RZ-01), PANIKOILI JAJPUR ROAD,JAJPUR

PUDUCHERRY

KARAIKAL

426. SHENBAKA CARS (CCFN-CC-01), RESY. NO. 38/16-A, POOVAM VILLAGE, KARAIKAL, PUDUCHERRY. - 609609

PUNJAB

AMRITSAR

427. JAYCEE MOTORS PRIVATE LIMITED (17NC-17-01), JAYCEE MOTORS, VERKA BYE PASS, OUTSIDE ASHBERRY HOMES, VILLAGE VALLAH, AMRITSAR, PUNJAB - 143501

BATALA

428. PATHANKOT VEHICLEADES PVT LTD (V5NA-V5-01), HARDO JANDE , GT ROAD, BATALA

BHATHINDA

429. TARA AUTOMOBILES (70NA-70-01), KHASRA NO. 3534, NEAR ITI CHOWK, MANSA ROAD, BHATHINDA, PUNJAB - 151001
PH :8437019666.

GURDASPUR

430. PATHANKOT VEHICLEADES (4XNA-4X-01), KHASRA NO. 24/1, 24/2, 25/1, KHEWAT NO. 54/55, SITUATED AT BABRI NATIONAL HIGHWAY, GURDASPUR, PUNJAB.

HOSHIARPUR

431. HOSHIARPUR AUTOMOBILES (H4NA-H4-S1) - 0
432. HOSHIARPUR AUTOMOBILES (H4NA-H4-01), SHED NO 11 A & 12 A, INDUSTRIAL ESTATE JALANDHAR ROAD HOSHIARPUR, 14602 - 14602

JALANDHAR

433. LOVELY AUTOS (35NA-35-01), NH 1 GT ROAD, PRAGPUR, JALANDHAR PUNJAB
434. MARWAHA AUTOS (A UNIT OF INDERJIT MARWAHA AUTOS PVT LTD) (35NC-35-01), KHASRA NO - 16450, SITUATED AT RAJA GARDEN, KAPURTHALA ROAD, JALANDHAR CITY. - 144003
PH :9915944600.

KAPURTHALA

435. LOVELY AUTOS (4ZNA-4Z-01), KEVAT KHATA NO. 1140/1400, KHASRA NO. 2362/2/73-19, OPPOSITE NEW SABJI MANDI, SULTANPUR ROAD, KAPURTHALA CITY, PUNJAB

KHANNA

436. HOSHIARPUR AUTOMOBILES (N3NA-N3-01), H B NO. 221, KHAWAT NO. 231, ALOUR, KHANNA

LUDHIANA

437. GULZAR MOTORS PVT LTD (62NE-62-01), PLOT NO 2662 NEAR SILVER ARC MALL, AARTI CHOWK, LUDHIANA, PUNJAB - 141003
PH :9814839777.
438. HOSHIARPUR AUTOMOBILES (62NG-62-01), S-46/1616/1, G.T. ROAD, DHOLEWAL CHOWK, LUDHIANA, PUNJAB - 141003
PH :8872501234.
439. LOVELY AUTOS (62NF-62-01), 287/1, MOTI NAGAR, SHERPUR BYPASS, GT ROAD, LUDHIANA - 141010
PH :9875999161.

440. MARWAHA AUTOS (A UNIT OF INDERJIT MARWAHA AUTOS PVT LTD) (62NH-62-01), OPP. MEDIWAYS HOSPITAL, FEROZPUR ROAD, LUDHIANA - 141015
PH :8872000357.

MANSA

441. TARA AUTOMOBILES (TLNA-TL-01), NEAR TEENKONI ,SIRSA MANSA FLY OVER , MANSA, PUNJAB.

MOGA

442. REMIRA MOTORS PVT LTD (H6NA-H6-S1) - 0

MOHALI

443. CM AUTOSALES PRIVATE LIMITED (L1NA-L1-01), C-155, INDUSTRIAL AREA, PHASE-7, MOHALI

NABHA

444. DIVINE AUTOWORLD LLP (UFNA-UF-01), RADHA SWAMI BYPASS ROAD, ADJOINING PUNJAB FURNITURE PALACE, NABHA, DIST. PATIALA, PUNJAB - 147201

NAKODAR

445. LOVELY AUTOS (35NA-5B-02), KHASRA NO. 46/26 SHOWROOM NO. 1, NEAR ST. JUDE'S CONVENT SCHOOL, OPP. THE PALM, NAKODAR, JALANDHAR - 144040

NAWANSHAHR

446. LOVELY AUTOS (J7NA-J7-01), VILL. LANGROYA, CHANDIGARH-NAWANSHAHR ROAD, DIST. NAWANSHAHR (S.B.S. NAGAR) - 144516
PH :9915028682.

PATHANKOT

447. PATHANKOT VEHICLEADES PVT LTD (A7NA-A7-01), PLOT NO.-C-30, INDUSTIAL GROWTH CENTRE, VILL. CHACELI, PATHANKOT - 145023
PH :7527006800.

RAJPURA

448. DIVINE AUTOWORLD LLP (HKNA-HK-01), VILLAGE BHADAK, RAJPURA -PATIALA HIGHWAY, RAJPURA, PATIALA

SANGRUR

449. MAX AUTOMOBILES (G4NB-G4-01), VILL. BHINDRAN, PATIALA ROAD, SANGRUR PIN - 148001 - 148002

TARN TARAN

450. JAYCEE MOTORS PRIVATE LIMITED (BLPN-BL-01), KHASRA NO 22/2/2(1-6), 22//9(3-4) 22//15/1/1(1-8) 22//12(0-8) 22//15/1/2(3-0) 2//17(0-16) SARHALI- AMRITSAR ROAD, NEAR MAJHA PUBLIC SCHOOL, TARN TARAN, PUNJAB

RAJASTHAN

AJMER

451. NAVNEET MOTORS (B2NA-B2-01), PLOT NO7 -8,RIICO INDUTRAIL ESTATE MAKHAPURA NASIRBAD ROAD,AJMER(RAJASTHAN)-PIN CODE-305002 - 305002
PH :9414149149.

ALWAR

452. FORTUNE CARS (A UNIT OF JYOTI AUTOMOBILES PVT LTD) (F9NA-F9-01), 6TH MILESTONE VILLAGE JATIYANA,OPP. PETROL BEHROR ROAD ALWAR - 301001
PH :9982341741.

ANGUL

453. ODYSSEY MOTORS PVT LTD (W1NA-W1-01), NH 55, KANDASAR, NALCO NAGAR, ANGUL, ODISHA, 759145

BAGRU

454. PREM MOTORS PVT LTD (USNA-US-01), KHASRA NO. 64/1104, NH-8, AJMER ROAD, NEAR SANSKAR COLLAGE, BAGRU (RAJASTHAN)

BARAN

455. BHATIA & COMPANY (A UNIT OF BHATIA CORPORATION PVT LTD) (PMNA-CTG-01), ATRU ROAD, BARAN, RAJASTHAN. - 325205

BARMER

456. LMJ SERVICES LTD (SHNA-SH-01), KHASRA NO. -1665/4/2, NH-68, OPP. CHOWDHARY PETROL PUMP, BARMER, RAJASTHAN.

BHARATPUR

457. TM MOTORS PVT LTD (5JNA-5J-S1) - 0

BHILWARA

458. CHAMPION CARS (A UNIT OF PREM CARS PVT LTD) (E3NA-E3-01), NEXA SUKHADIA CIRCLE, CHAMPION CARS, AJMER ROAD, BHILWARA - 311001
PH :9001027933.

BHIWADI

459. FORTUNE CARS (A UNIT OF JYOTI AUTOMOBILES PVT LTD) (9HNA-9H-01), KHASRA NO 990/1329 VILLAGE KHIJURIWAS, OPP MATILA POLICE CHOWKI, BHIWADI (RJ) - 301019

BIKANER

460. AURIC MOTORS PRIVATE LIMITED (71NA-71-01), PLOT NO. F-189, SRI GANAGANAGAR ROAD, OPPOSITE RAC-3RD , BICHHWAL INDUSTRIAL AREA , BIKANER 334001 - 334001
PH :9887222786.

461. VIPUL MOTORS (71NB-71-01), E-62, PHASE -1, BICHHWAL INDUSTRIAL AREA, BIKANER (RJ) - 334001

CHAKSU

462. KTL AUTOMOBILE (JMNA-JM-01), KHASRA NO. 2937, TONK ROAD CHAKSU, JAIPUR - 303901

CHIRAWA

463. AURIC MOTORS PRIVATE LIMITED (SYNA-SY-01), WARD NO.-15, NEAR DOBI, CHIRAWA (RAJASTHAN)

CHITTORGARH

464. TECHNOY MOTORS INDIA PVT LTD (K9NA-K9-01), PLOT NO-28, OLD RIICO INDUSTRIAL AREA, CHITTORGARH, RAJASTHAN - 312001

465. TECHNOY MOTORS INDIA PVT LTD (K9NA-`03-S1) - 0

DAUSA

466. VIPUL MOTORS PVT LTD (FMNA-FM-01), 1365, RAJPOOT COLONY, JAIPUR ROAD, DAUSA

HINDAUN

467. FORTUNE CARS (A UNIT OF JYOTI AUTOMOBILES PVT LTD) (S0NA-S0-01), (KHASRNA NO 771,772, SH 1 , ROAD WAYS BUS STAND , PHULWARA , HNDDAUN CITY , KARAULI

JAIPUR

468. KP AUTOMOTIVES PVT LTD (11NB-11-01), PLOT NO.3-4,MANGLAM RIICO INDUSTRIAL AREA,NEAR KANAKPURA RAILWAY STATION,SIRSI ROAD - 302034
PH :7412059823.

469. PREM MOTORS PVT LTD (11NC-11-01), PLOT NO- 12,13,14, SUDARSHANPURA INDUSTRIAL AREA, NEAR 22 GODAM, JAIPUR

470. PREM MOTORS PVT LTD (11NC-11-S1) - 0

471. SATNAM MOTOCORP PVT LTD (11ND-11-S1) - 0

472. SATNAM MOTOCORP PVT LTD (11ND-11-01), D-27, K/L/M, ROAD NO-3,SIKAR ROAD, VISHWAKARMA INDUSTRIAL AREA ,JAIPUR, RAJASTHAN-302023. - 302023
PH :9649373311.

473. VIPUL MOTORS PVT LTD (11NA-11-S1) - 0

474. KTL AUTOMOBILE PVT LTD (11NF-11-01), PLOT NO.- F-131, RIICO, MALVIYA NAGAR, JAIPUR (RAJ) - 302034

475. SATNAM MOTOCORP PVT LTD (11ND-11-02), E-50, ROAD NO.3, SIKAR ROAD, VKIA, JAIPUR, PIN-302013

JHALAWAR

476. BHATIA & COMPANY (A UNIT OF BHATIA CORPORATION PVT LTD) (RVNA-RV-01), NEAR RAILWAY BRIDGE , GINDORE, TALUKA JHALARAPATAN, JHALAWAR, RAJASTHAN

JHUNJHUNU

477. AURIC MOTORS PRIVATE LIMITED (FNNA-FN-01), NEAR TVS TWO WHEERLER SHOWROOM ROAD NO 3 GUDHA MOD, RAJASTHAN 333001 - 333001
PH :7970006402.

JODHPUR

478. AURIC MOTORS PRIVATE LIMITED (65NA-65-01), 14 A, HEAVY INDUSTRIAL AREA, ITI CIRCLE, SARASH DAIRY ROAD, JODHPUR - 334001
PH :7300077394.

479. LMJ SERVICES LTD (65NB-65-01), B-8, C-9,10, MIA, BASNI, PHASE-1 JODHPUR - 342009
PH :7412087320.

480. LMJ SERVICES LTD (65NB-65-02), PLOT NO.-61, GERU MARKET, BHADWASIYA FRUIT MANDI, JODHPUR, RAJASTHAN - 342001
PH :8094011126.

KOTA

481. BHATIA & COMPANY (A UNIT OF BHATIA CORPORATION PVT LTD) (61NA-61-01), G-11A, AUTOMOBILE ZONE, IPIA, NEAR DAKANIYA RAILWAY STATION, KOTA - 324005
PH :8094011126.

NAGAUR

482. SHRI MANGALAM AUTO PVT LTD (HLNA-HL-S1) - 0

PALI

483. LMJ SERVICES LTD (J9NA-J9-01), PLOT NO. 21, SUMERPUR ROAD, PALI, RAJASTHAN. - 306401

RAJSAMAND

484. TECHNOY MOTORS INDIA PVT LTD (X2NA-X2-01), P.NO. F-28,29,30, RICCO INDUSTRIAL AREA, DHOINDA, RAJSAMAND (RAJ)

SAWAI MADHOPUR

485. PREM MOTORS PVT LTD (FYNA-FY-01), PLOT NO 9 & 10 , RAMNAGAR VANJYAK YOJNA , OPPOSITE INDIAN PETROL PUMP , KHERDA , JEENAPUR,SAWAI MADHOPUR

SHAHPURA

486. K.P. AUTOMOTIVES PVT LTD (NHNA-NH-01), 1876/715, DHANI HANUMAN SAGAR, WARD NO. -23, NH-48, SHAHPURA (RAJASTHAN).

SIKAR

487. JAMU AUTOMOBILES PVT LTD (K7NA-K7-01), THAR PETROL PUMP,JAIPUR ROAD,SIKAR - 332001
PH :9414037515.

SUJANGARH

488. AURIC MOTORS PRIVATE LIMITED (BRBN-BRB-01), NEAR AABKAAN THANA, CHAPPAR ROAD, SUJANGARH

SURATGARH

489. AURIC MOTORS PVT LTD (LGNA-LG-01), PLOT NO. S-6, VRINDAVAN VIHAR, IN FRONT SURATGARH PG COLLEGE, OPP. GSS, MAIN GANGA NAGAR ROAD, SURATGARH, RAJASTHAN

TONK

490. KP AUTOMOTIVES PVT LTD (GMNA-GM-01), PLOT NO - 36~39 , NEAR KAMDHENU CIRCLE , JAIPUR ROAD , TONK

UDAIPUR

491. TECHNOY MOTORS INDIA PVT LTD (49NB-49-01), OPP. NAND BHAWAN, GOVERDHAN VILLAS , UDAIPUR
492. NAVNEET MOTORS (49NA-49-01), NEAR MEGNUS HOSPITAL, BHUVANA, UDAIPUR (RAJASTHAN)- 31

TAMIL NADU

ATTUR

493. SM CAR PVT LTD (QTNA-QT-01), APPAMASAMUDRAM, ATTUR MAIN ROAD, TAMIL NADU. - 636010

CHENGALPET

494. AIE CARS PRIVATE LIMIED (BBSX-BBS-01), NO. 1/7-A, GST ROAD, CHENGALPET – 603001 - 603001

CHENNAI

495. ABT LIMITED (14NJ-14-01), NO123, KANNIGAPURAM, VELACHERY MAIN ROAD, BEHIND RACE COURSE, GUINDY, CHENNAI, TAMIL NADU - 600032
PH :9994444303.
496. KHIVRAJ MOTORS PVT LTD (14NA-14-01), PLOT NO.21, AMBIT IT PARK ROAD, AMBATTUR INDUSTRIAL ESTATE, CHENNAI-600058. - 600058
PH :9626099999.
497. KHIVRAJ MOTORS PVT LTD (14NA-14-02), OLD S.NO. 11/1 & 2, NEW S.NO.11/2 - B, NO.100, NERKUNDRAM VILLAGE, SAIDAPET TALUK, CHENNAI - 600107
498. PILLAI & SONS MOTOR COMPANY (14NC-14-01), DOOR NO.46, MEDAVAKKAM MAIN ROAD, KEELAKATTALAI, CHENNAI, TAMILNADU - 600117
PH :9994950505.
499. POPULAR VEHICLES & SERVICES LTD (14NB-14-01), 69/A & 69/B, SAMAYAPURAM MAIN ROAD, PORUR, CHENNAI,TAMILNADU- 600116. - 600116
PH :9842389111.
500. VISHNU CARS PVT LTD (14NG-14-01), SURVEY NO 219, ADJOINING HP PETROL PUMP, POONAMALLE HIGH ROAD, KATTUPAKKAM, CHENNAI, TAMIL NDU - 600056
PH :7339359111.
501. VISHNU CARS PVT LTD (14NG-14-02), POONAMALLE HIGH ROAD, ARUMBAKKAM, KOYAMBEDU, CHENNAI, TAMIL NADU. - 600056
PH :7550333622.
502. CRESCO (A UNIT OF NEXGEN VENTURES PVT LTD). (14NK-14-01), SY NO. 56/2, PERIYAR E.V.R SALAI (POONAMALLEE HIGH ROAD), PERIYAMET, CHENNAI -600003.
503. KALYANI MOTORS PVT LTD (14NM-14-S1)

CHIDAMBARAM

504. VISHNU CARS PVT LTD (CPKN-CPK-01), TS NO: 1375/5A & 5B, RAJALAKSHMI NAGAR, CHIDAMBARAM BY-PASS LINK ROAD, CHIDAMBARAM -608001.

COIMBATORE

505. AADHI CARS PRIVATE LIMITED (41NB-41-01), PLOT NO.50-55, ASHOK NAGAR, C-COLONY,TAKKAL PURAM, TRIVANDRUM ROAD,KOKKARAKULAM VILLAGE, PALAYAMKOTTAI, TIRUNELVELI,TAMILNADU - 627007
PH :9003977577.
506. ABT LIMITED (41NC-41-S1) - 0
507. ABT LIMITED (41NC-41-01), 56, BHARATHI NAGAR, SATHY MAIN ROAD, GANAPATHY, COIMBATORE - 641006
508. JAIKRISHNAA AUTOSALES PVT LTD (41ND-41-01), NO. 656, TRICHY ROAD, NEAR ORTHO ONE HOSPITAL, COIMBATORE, TAMIL NADU- 641012 - 641012
509. SREE SARADHAMBAL AUTOMOBILES PVT LTD (41NA-41-01), 18/1472, S.N.R COLLEGE ROAD, NAVA INDIA, COIMBATORE, AND TAMILNADU-641004. - 641004
PH :9790004271.

CUDDALORE

510. VISHNU CARS PVT LTD (5QNA-5Q-01), SY NO. 1898 &1909/4, WARD NO.5, BLOCK NO. 50, RAMAKRISHNA AVENUE, CUDDALORE - 607002

DHARMAPURI

511. SRI AMMAN CARS INDIA PVT LTD (5RNA-5R-01), SY NO. 5/1 & 11/2, KRISHNAGIRI MAIN ROAD, DHARMAPURI, TAMILNADU.

DINDIGUL

512. PL.A MOTORS FIRM (S4NA-S4-01), SEELAPADI, TRICHY HIGHWAY, DINDIGUL, TAMIL NADU - 624001

ERODE

513. SREE SARADHAMBAL AUTOMOBILES ERODE PVT LTD (H7NA-H7-01), NO.75, NEAR SURABI NURSERY, PERUNDURAI ROAD, ERODE, TAMILNADU-638011. - 638011
PH :9786022272.

GUDUVANCHERRY

514. VISHNU CARS PVT LTD (BADN-BAD-01), SY NO. 5/2B & 6/3, GST ROAD, POTHERI, GUDUVANCHERY, CHENGALPATTU DISTRICT, TAMIL NADU

HOSUR

515. SRI AMMAN CARS INDIA PVT LTD (7QNA-7Q-01), NEAR CATER PILLAR WARE HOUSE, SEETHA RAMNAGAR,NH-44,OPP TO ANAND ELECTRONICS, HOSUR, KRISHNAGIRI DISTRICT, TAMILNADU - 635109
PH :9841033464.

KARAIKUDI

516. MEENAKSHI AUTO ZONE PRIVATE LIMITED (HXNA-HX-01), T S NO 624/1, DOOR NO. 5, 1ST STREET, SUBRAMANIAPURAM, KARAIKUDI, TAMIL NADU - 630001
PH :9940094881.

KARUR

517. AADHI CARS PRIVATE LIMITED (K4NA-K4-01), SF NO. 364 ,SALEM BYPASS, KARUR, TAMIL NADU - 639006

KATPADI

518. GANESH CARS PVT LTD (C6NA-C6-3), SYNO 613/SA3, CHENNAI ROAD, KATPADI, VELLORE

KRISHNAGIRI

519. AMMAN CARS (QLNA-QL-01), SY NO.410/5, 410/3B1, CHENNAI BYEPASS ROAD, BOGANAPALLI, KRISHNAGIRI. - 635001

KUMBAKUNAM

520. PILLAI & SONS MOTOR COMPANY (N4NA-N4-01), 3133/A, CRESANT NAGAR, CHENNAI BYPASS ROAD, KORANATTU KARUPPUR, KUMBAKONAM – 612501. - 612501

MADURAI

521. ASIR AUTOMOBILES PVT LTD (42NA-42-01), 176, MAIN ROAD, KAMARAJAR ROAD, MADURAI, TAMIL NADU – 625001 - 625001
522. SIVA AUTOMOTIVE TRADING PVT LTD (42NB-42-01), 4-113/H,RING ROAD, UTHANGUDI, MADURAI, TAMILNADU

MAYILADUTHURAI

523. PILLAI & SONS (AGNA-AG-01), NO.46, VALLALAGARAM, SS NALLUR POST, SIRKALI MAIN ROAD, MAYILADUTHURAI. - 609118

NAGERCOIL

524. ATHEN CARS (S5NA-S5-01), NO. G. 3/9, NO. 1197, NELSON COMPOUND, KP ROAD, PARVATHIPURAM, NAGERCOIL, TAMILNADU - 629003
PH :9751196436.

NAMAKKAL

525. SRI CITY AUTO (A UNIT OF CITY AUTO PVT LTD) (X4NA-X4-01), SURVEY NO. A, 96/5, SALEM - NAMAKKAL ROAD, NAMAKKAL, TAMIL NADU 637001 - 637001

OOTY

526. SREE SARADHAMBAL AUTOMOBILES PVT LTD (41NA-Y1-02), DOOR NO 155/A IN ASSESSMENT NO 60466,UDHAGAMDALAM(OOTY),TAMIL NADU

PONDICHERRY

527. SHENBAKA CARS PVT LTD (96NA-96-01), RS NO 50/5A, PONDICHERRY CUDDLORE MAIN ROAD ,KIRUMAMBAKKAM, BAHOOR COMMUNE,PONDICHERY - 607402
PH :7338322220.

RAJAPALAYAM

528. ABT (5VNA-5V-01), NO.490/3, OPPOSITE TO N.A MANJAMMAL POLYTECHNIC COLLEGE, IDYANKULAM PANCHAYAT, RAJAPALAYAM MAIN ROAD, MAMSAPURAM, RAJAPALAYAM – 626110. - 626110

SALEM

529. SM CAR PVT LTD (A2NB-A2-01), S NO 131/1A,BYPASS ROAD, NEAR INDIAN OIL ASSOCIATION, PETROL BUNK, KONDALAMPATTY, SALEM - 636010
PH :7094440010.
530. THRIVENI CAR COMPANY PVT LTD (A2NA-A2-01), 2/6, KANDHAMPATTY,BYE PASS ROAD, SALEM, TAMILNADU - 636005
PH :9786022272.

SRIPERUMBADUR

531. VISHNU CARS PVT LTD (7BNA-7B-01), SURVEY NO 147/2A, NEW SR. NO : 147/10, CHENNAI -BANGALORE HIGHWAY, SRIPERUMBUDUR, TAMIL NADU 602105. - 602105

SULUR

532. AADHI CARS PRIVATE LIMITED (TKNA-TK-01), 3/147-4C, ASHWINI MAHAL COMPLEX, TRICHY MAIN ROAD, SULUR, 641401

TENKASI

533. AADHI CARS PRIVATE LIMITED (BXRN-BXR-01), D.NO. 166/4 & 166/5, KUTHUKKALVALASAI, TENKASI

THANJAVUR

534. PILLAI & SONS MOTOR COMPANY (E7NA-E7-01), SURVEY NO 237/1, NEELAGIRI THAKUR THOTTAM, VALLAM ROAD, THANJAVUR, TAMIL NADU - 613403
PH :9443264165.

THENI

535. MEENAKSHI AUTO ZONE PRIVATE LIMITED (9UNA-9U-01), SURVEY NO. 120, EAST RATHINAM NAGAR, PERIYAKULAM MAIN ROAD, THENI-625531

TIRUNELVELI

536. AADHI CARS PRIVATE LIMITED (A3NA-A3-01), PLOT NO.50-55, ASHOK NAGAR, C-COLONY, TAKKALPURAM, TRIVANDRUM ROAD, C1 KOKKARAKULAM

TIRUPUR

537. SHASHTI CAR PVT LTD (Y7NA-Y7-01), 16A-1,SHREE PADMINI GARDENS, KANGAYAM RD, TIRUPPUR, TAMIL NADU - 641604
PH :9942903310.

TIRUVALLUR

538. KHIVRAJ MOTORS PVT LTD (HHNA-HH-01), 173 A, POONAMALLEE HIGH ROAD, VENGATHUR, TIRUVALLUR - 602002

TIRUVANNAMALI

539. GANESH CARS PVT LTD (C6NA-LX-02), SURVEY NO. 63/1A, VENGIKKAL, VELLORE MAIN ROAD, TIRUVANNAMALAI, PIN-606604, TAMILNADU - -606604

TRICHY

540. PLA MOTORS (23NA-23-01), TS NO.29P,31P & 32P,36P, NEW WARD "E", NEW BLOCK NO.27, ANNA NAGAR, TRICHY, TAMILNADU - 620017. - 620017
PH :8110099991.

TUTICORIN

541. ASIR AUTOMOBILES PVT LTD (S6NA-S6-S1) - 0

VELLORE

542. GANESH CARS PVT LTD (C6NA-C6-01), 96/6, CHENNAI-BANGALORE HIGHWAY, NH-46, PERUMUGAI,VELLORE, TAMILNADU - 632009
PH :9884722126.

VILUPPURAM

543. ABT LIMITED (QQNA-QQ-01), NO. 526, 1, MAMBALAPATTU ROAD, NEAR ES SCHOOL, MOOVENDAR NAGAR, VILUPPURAM, TAMILNADU. - 605602

TELANGANA

ARMUR

544. VARUN MOTORS PVT LTD (1HNA-BBN-03), CHIKKABALLAPUR, KARNATAKA - 562101.

ATTAPUR (HYDERABAD)

545. ADARSHA AUTO (10NM-10-03), H.NO 13-6-434/C/1,PILLAR NO 85,ATTAPUR,HYDERABAD - 500048

BODUPAL (SECUNDRABAD)

546. VARUN MOTORS PVT LTD (K6NA-K6-02), SURVEY NO 63, PEERZADIGUDA, BODUPPAL, MEDCHAL MALKAGIRI DISTRICT, HYDERABAD

HYDERABAD

547. ADARSHA AUTO WORLD PVT LTD (10NG-10-01), PLOT NO 6/P, 54, SURVEY NO. 204, PRAGATI NAGAR, BALANAGAR, KUKATPALLY, HYDERABAD - 500072
548. ADARSHA AUTO WORLD PVT LTD (10NG-`10-02), SHAMSHABAD, NH44, HYDERABAD, TELANGANA – 501218 - 501218
PH :8297116633.
549. ADARSHA AUTO WORLD PVT LTD (10NG-10-S1) - 0
550. ADARSHA AUTO WORLD PVT LTD (10NM-10-01), SY NO 382 TO 385, RAMAPALLY, HYDERABAD - 500051
551. GEM MOTORS (INDIA) PVT LTD (10NH-10-01), D.NO.8-96, SURVEY NO.128/2 & 129, TYAGARAYANANAGAR COLONY, KOTHAPET, HYDERABAD, TELANGANA. - 500084
PH :9912345899.
552. JAYABHERI AUTOMOTIVES PVT LTD (10ND-10-01), HNO 2-40/64, SURVEY NO 23 TO 28, JUBILEE GARDENS, KOTHAGUDA, HYDERABAD, TELANGANA-500032. - 500032
553. JAYABHERI AUTOMOTIVES PVT LTD (10NN-10-01), STALL NO MI-1, MIYAPUR, HYDERABAD -500049 - 500049
554. KALYANI MOTORS PVT LTD (10NE-10-01), SURVEY NO.184, KARMAGHAT VILLAGE, BESIDE KHARMANGHAT HANUMAN TEMPLE, R.R DISTRICT, HYDERABAD, TELANGANA - 500079
PH :9347121212.
555. THE MITHRA AGENCIES (10NK-10-01), USHA MAYURI THEATER, OPP TO SPENCERS MARKET, MUSHEERABAD, SECUNDERABAD, ANDRAPRADESH-500020. - 500020
556. POPULAR VEHICLES & SERVICES LTD (10NO-10-S1) - 0
557. POPULAR VEHICLES & SERVICES LTD (10NO-10-01), KOMPALLY,BASHIRABAD, JEEDIMETLA, SECUNDERABAD, TELANGANA 500010 - 500014
558. POPULAR VEHICLES & SERVICES LTD (10NO-10-02), PLOT NO 8 MINI INDUSTRIAL ESTATE,SERILINGAMPALLY, HAFEEZPET, HYDERABAD - 500050
559. SAI SERVICE PVT LTD (10NC-10-01), SURVEY NO 78, ADJACENT TO HP PETROL PUMP, GOPANAPALLY, GACHIBOWLI, HYDERABAD -500046. - 500046
PH :9966377888.
560. VARUN MOTORS PVT LTD (10NB-10-01), B-54, CO.INDUTRIAL ESTATE, BALANAGAR, HYDERABAD, TELENGANA - 500037
561. VARUN MOTORS PVT LTD (10NB-10-02), H.NO. 8-2-120/117/A/2. PLOT NO. 83,83A,83B, ROAD NO. 2, BESIDES SBI BANK, BANJARA HILLS, HYDERABAD - TELANGANA - 500033
PH :9885610555.
562. KALYANI MOTORS PVT LTD (10NE-10-02), NO.611 PEDDA AMBERPET MUNICIPALITY, PEDDA AMBERPET, TELANGANA, HYDERABAD - 501505

IBRAHIMPATNAM-TL

563. KALYANI MOTORS PRIVATE LIMITED (CSFN-CSF-01), PLOT NO. 3, 4, 11 & 12, SHERIGUDA, IBRAHIMPATNAM, TELANGANA

JANGAON

564. ADARSHA AUTO WORLD PVT LTD (KINA-KI-01), SY NO:289,HYDERABAD ROAD,JANGOAN

KAMAREDDY

565. VARUN MOTORS PVT LTD (1HNA-KX-02), BESIDES SK FUNCTION HALL , KAMAREDDY - 507125

KARIMNAGAR

566. ADARSHA AUTO WORLD PVT LTD (N6NA-N6-01), 8-6-301, BY PASS ROAD, AUTO NAGAR, KARIMNAGAR, TELANGANA - 505001
PH :9847073265.
567. ADARSHA AUTO WORLD PVT LTD (N6NA-N6-02), PADMANAGAR, SIRICILLA ROAD, KARIMNAGAR - 505001

KHAMMAM

568. PARAMASHIVA MOTORS PVT LTD (1GNA-1G-01), SY NO. 507,VELUGUMATLA, VILLAGE, KHAMMAM, TELANGAN

KOTHAGUDEM

569. VARUN MOTORS PVT LTD (26NA-HF-03), TALLADA - KOTHAGUDEM RD, BABUCAMP, KOTHAGUDEM, TELANGANA 507125 - 507125

MAHBUBNAGAR

570. SRI JAYARAMA MOTORS PRIVATE LIMITED (WPNA-WP-01), CHRISTIANPALLY, BHOOTPOOR ROAD, MAHBUBNAGAR, TELANGANA - 509001
PH :8096990074.

MANCHERIAL

571. ADARSHA AUTO WORLD PVT LTD (CMNA-CM-01), SURVEY NO-417,BELLAMPALLI MANCHERIAL ROAD ,MANCHERIAL,TELANGANA - 504208
PH :9133329709.

MEDAK

572. VARUN MOTORS PVT LTD (KHFNA-KF-01), PLOT NO 74,SY NO 248/3 ,NEAR CWHC GODOWNS,MEDAK

MEDCHAL

573. AUTOFIN LIMITED (CIDN-CID-01), OPP BHARATH PETROLEUM HYDERBAD-KAMREDDY HIGHWAY,MEDCHAL

NIRMAL

574. ADARSHA AUTO WORLD PVT LTD (10NG-AA-03), SY 79,80,83/A,KADTHAL VILLAGE,M/O SOAN,NIRMAL

NIZAMABAD

575. VARUN MOTORS PVT LTD (1HNA-1H-01), 1-51/4/1/D4 MADAHAVA NAGAR,HYDERABAD ROAD,NIZAMABAD,TELANGANA,503230 - 503230
PH :9542222486.

SANGAREDDY

576. SAI SERVICE (OINA-OI-01), SY NO 772/A,HYDERABAD TO MUMBAI HIGHWAY, SANGAREDDY

SECUNDERABAD

577. AUTOFIN LIMITED (K6NB-K6-01), PLOT NO.6, SURVEY NO.267/1 & 267/2, BOWENPALLY, BALANAGAR MAIN ROAD, SECUNDERABAD, TELANGANA - 500011
PH :8886144551.
578. VARUN MOTORS PVT LTD (K6NC-K6-01), VARUN MOTORS,2ND CROSS ROAD,SAINIKPURI,SECUNDERABAD
PH :779960094.

SHADNAGAR

579. SRI JAYARAMA MOTORS PRIVATE LIMITED (WSNA-WS-01), SY.NO 204,BESIDE VIVA HOSPITALS,SHADNAGAR

SIDDIPET

580. ADARSHA AUTO WORLD PVT LTD (10NM-CAL-02), SY.NO.194/4.PONNALA CROSS. BESIDE HP PETROL, SIDDIPET - 502375

WARRANGAL

581. ADARSHA AUTO WORLD PVT LTD (D5NA-D5-01), H.NO: 23-6-132, HUNTER ROAD, OPP TO CITIZENS CLUB, WARANGAL, TELANGANA - 506007
PH :8978944414.

ZAHEERABAD

582. JAYABHERI AUTOMOTIVES PVT LTD (BATN-BAT-01), SITE AT SY NO. 271 & 275, MAIN ROAD, ZAHIRABAD

UTTAR PRADESH

AGRA

583. KTL PVT LTD (66NC-66-01), KHASRA NO - 246/1, 249/1, 251 , KUBERPUR, AGRA. - 282006
584. PREM MOTORS PVT LTD (66NB-66-S1) - 0
585. PREM MOTORS PVT LTD (66NB-66-01), KHASRA NO.-655, VILL ARTONI, DELHI-AGRA HIGHWAY, AGRA - 282007

586. MERAK VEHICLES LLP (66NE-66-01), 30, MUNRO ROAD, SADAR BAZAAR, AGRA CANTT, 282001. - 282001

AKBARPUR

587. KTL PVT LTD (LHNA-LH-01), GRAM BARA TEHSIL AKBARPUR, NEAR PRABHAT ENGINEERING COLLEGE. KANPUR DEHAT, (UTTAR PRADESH)

AKBARPUR-A NAGAR

588. SMARTWHEELS (BINA-BI-01), PLOT NO 486 MI MAUJA BAIRAMPUR BARWAN , AKBARPUR DISTT,
AMBEDKAR NAGAR, UTTAR PRADESH

ALIGARH

589. ANIL MOTORS (A UNIT OF CLML VEHICLES PVT LTD) (B6NA-B6-01), PLOT NO. 5/129, GT ROAD, RAM NAGAR COLONY, SARSOL, ALIGARH, UTTAR PRADESH. - 202002
PH :9639775522.
590. ANIL MOTORS (A UNIT OF CLML VEHICLES PVT LTD) (B6NA-B6-02), VILL KARSUA, PALWAL-DELHI ROAD, ALIGARH PIN 202140 - 202140
PH :9358373099.
591. ANIL MOTORS (A UNIT OF CLML VEHICLES PVT LTD) (B6NA-B6-S1)

ALLAHABAD

592. BRIGHT 4 WHEEL SALES PRAYAGRAJ PRIVATE LIMITED (29NC-29-01), PLOT NO. C-23, INDUSTRIAL AREA - NAINI, PRAYAGRAJ - 211009
593. BRIGHT 4 WHEEL SALES PRAYAGRAJ PRIVATE LIMITED (29NC-29-S1) - 0
594. AMITDEEP MOTORS (29NA-29-S1)

ALMORA

595. NAINITAL MOTORS PVT LTD (SQNA-SQ-01), NH109, PALTAN BAZAR, DHARANAULA, ALMORA, UTTARAKHAND

AMROHA

596. AKANKSHA MBD (AONA-AO-01), GATA NO. 2993, MOHALLA SARAI KOHNA, BIJNOR ROAD, AMROHA - 244221

BAREILLY

597. CORAL MOTORS PVT LTD (56NA-56-01), DELHI RAMPUR ROAD, IN FRONT OF MINI BYPASS, CB GANJ, BARIELLY, UP - 243001
PH :9359101010.

BARHALGANJ

598. ARBIT AUTOMOBILES PVT LTD (72NB-SHK-02), AARAZI NO- 395 & 395 SINDHUAPUR TEHSIL GOLA DIST GORAKHPUR

BIJNOR

599. SHAKUMBARI AUTOWHEELS PVT LTD (6DNA-6D-01), 4TH KM. MILESTONE, BIJNOR - NAJIBABAD RD, NEAR DPS SCHOOL, BIJNOR, UTTAR PRADESH 246701 - 246701

BULANDSHAHR

600. SKUNIVERSE AUTOMOBILES PVT LTD (M5NA-M5-01), 578M,DELHI ROAD,TRANSPORT NAGAR,BULANDSHAHR-203001 - 203001

ECOTECH (NOIDA)

601. J J IMPEX (MSM) (T283-T2-S1) - 421503

ETAH

602. DEV MOTORS PVT LTD (XGNA-XG-01), GATA NO.164, VIRAMPUR, ETAH DELHI G.T ROAD, IN FRONT OF MAHINDRA SHOWROOM, ETAH, UTTAR PRADESH, PIN CODE - 207001 - 207001

ETAWAH

603. KULDEEP MOTORS PVT LTD (6ENA-6E-01), PILKHAR, KANPUR-ETAWAH ROAD, ETAWAH. - 206001

FATEHPUR

604. KULDEEP MOTORS KANPUR LLP (TMNA-TM-01), 466, G.T ROAD, NAUWA BAGH, FATEHPUR, UTTAR PRADESH - 212601 - 212601

FIROZABAD

605. DEV MOTORS PVT LTD (DFNA-DF-01), DHOLPURA, NEAR ST. JOHNS CHAURAHA, AGRA ROAD, FIROZABAD - 283203

GAJRAULA

606. AKANKSHA AUTOMOBILES PVT LTD (XDNA-XD-01), KHASRA NO. 1411F, ADJ. HYUNDAI SHOWROOM, OPP. RELIANCE PETROL PUMP, DELHI ROAD, GAJRAULA

GHAZIABAD

607. MOTORCRAFT SALES PVT LTD (59NB-59-S1) - 0
608. MSM (JJ IMPEX) (5982-59-N1), PLOT NO C, J J IMPEX (DELHI) LIMITED, 224, SITE-1, INDUSTRIAL AREA, BULANDSHAHR ROAD INDUSTRIAL AREA, GHAZIABAD, UTTAR PRADESH 201003 - 201003
609. REGENT AUTOLINKS PVT LTD (59NC-59-01), A-10/32,33,34, MEERUT ROAD INDUSTRIAL AREA, GHAZIABAD - 201002
610. ROHAN MOTORS LTD (59NA-59-S1) - 0
611. ROHAN MOTORS LTD (59NA-59-01), KHASRA NO 46 , DELHI MEERUT ROAD MEERUT ROAD INDUSTRIAL AREA, MORTA, GHAZIABAD, UTTAR PRADESH 245101 - 245101
PH :8178839830.
612. TR SAWHNEY AUTOMOBILES PVT LTD (59ND-59-01), A-8 AMBEDKAR ROAD, GHAZIABAD UP - 201001
613. MOTORCRAFT SALES PVT LTD (59NB-T2-02), D-40, SITE IV, GREATER NOIDA (U.P.)

GORAKHPUR

614. SMARTWHEELS PVT LTD (72NA-72-01), ARAZI NO. 623, 624 & 625, GULHARIA BAZAR, MEDICAL COLLEGE ROAD, GORAKHPUR, UTTAR PRADESH - 273009
PH :8222002147.
615. ARBIT AUTOMOBILES PVT LTD (72NB-72-01), PLOT NO - A & B, BUDDH VIHAR YOJNA, PART-B, TARAMANDAL ROAD, GORAKHPUR - 273009

GREATER NOIDA

616. MSM (JJ IMPEX) (T283-T2-N1), MARUTI SERVICE MASTERS, NEXA SERVICE, PLOT NO 02, ECOTECH 12, GREATER NOIDA, GAUTAM BUDDHA NAGAR, UTTAR PRADESH - 201009
617. RANA MOTORS PVT LTD (T2NB-T2-01), PLOT NO.26, SECTOR ECOTECH-12, GREATER NOIDA, GAUTAM BUDH NAGAR, GREATER NOIDA, PIN-201310, UTTAR PRADESH

HARDOI

618. CONCEPT CARS LIMITED (QENA-QE-01), PLOT NO. 1609 & 1605, GUNGABUX PURVA, BILGRAM RD, HARDOI, UTTAR PRADESH - 241001
PH :7607696666.

HATHRAS

619. DEV MOTORS PVT LTD (LPNA-LP-01), NAGLA UMMED, NEAR COCA COLA FACTORY, BANNA DEVI, ALIGARH ROAD, HATHRAS

JHANSI

620. SURI AUTOMOBILES (60NA-60-01), SHIVPURI - JHANSI ROAD, OPPOSITE HANSRAJ MODERN SCHOOL, JHANSI, UTTAR PRADESH - 284003
PH :7705000558.
621. BASERA VELOCITY CARS (A UNIT OF BASERA HOTELS AND RESORTS LLP) (60NB-60-01), 329, BUDHA, BADAGAON,GWALIOR ROAD, JHANSI

KANNAUJ

622. KTL PVT LTD (EMNA-EM-01), ARAZI GATA NO. 1247, NEAR MAA GAYATRI FILLING STATION, ASHOK NAGAR, SARAIMEERA, KANNAUJ, UTTAR PRADESH

KANPUR

623. KTL PVT LTD (28NB-28-01), ARAZI NO. 352, SINGHPUR KACHHAR, BITHOOR ROAD, NORTHERN RAILYWAY COLONY, KANPUR, UTTAR PRADESH. - 208017
PH :7408409312.

KHURJA

624. SKUNIVERSE AUTOMOBILES PVT LTD (SKPN-SKP-01), 206, V-TAINA GOSPUR, KHURJA JEWAR ROAD, KHURJA,

LAKHIMPUR KHERI

625. SUMITRA DS MOTORS PVT. LTD. (M3NA-M3-01), KHASRA NO - PLOT NO. 706, VILLAGE BHANDSARIYA, SH 730, LAKHIMPUR KHERI, UTTAR
PRADESH

LUCKNOW

626. KTL AUTOMOBILE PVT LTD (13ND-13-S1) - 0
627. KTL AUTOMOBILE PVT LTD (13ND-13-S2) - 0
628. KTL AUTOMOBILE PVT LTD (13ND-13-01), PLOT NO - 513, VILL HARIHARPUR BIJNAUR, OPP ANSAL API, AMAR SHAHEED PATH, LUCKNOW - 227105
PH :7311190503.
629. KTL AUTOMOBILE PVT LTD (13ND-13-02), GODAWARI ESTATE, SITAPUR ROAD, LUCKNOW
630. KULDEEP MOTORS (LUCKNOW) PVT LTD (13NE-13-S1) - 0
631. MEGA MOTORS (A UNIT OF AKM MOTORS PRIVATE LIMITED) (13NF-13-01), B-107, SECTOR-C, MAHANAGAR, LUCKNOW - 226006
632. ANAND MOTOR AGENCIES LTD (13NC-13-01), GATA NO. 1062 PARGANA RAJA BIJLI PASI VILLAGE AURANGABAD, SHAHEED PATH (OPPOSITE TO RAMABAI AMBEDKAR MAIDAN), LUCKNOW, UTTAR PRADESH - 226012
633. BRIGHT 4 WHEEL SALES PVT LTD (13NB-13-S2)
634. BRIGHT 4 WHEEL SALES PVT LTD (13NB-13-S1) - 0
635. BRIGHT 4 WHEEL SALES PVT LTD (13NB-13-01), PLOT NO - D10, SAROJINI NAGAR INDUSTRIAL AREA, LUCKNOW. PIN - 226008 - 226008
636. BRIGHT 4 WHEEL SALES PVT LTD (13NB-13-02), KHASRA NO. 197, 198, 200, 201, 202 SEMRA, FAIZABAD ROAD, LUCKNOW.
637. ONEUP MOTORS INDIA PRIVATE LIMITED (13NG-13-01), KHASRA NO. 1040, MUBARAKPUR, LUCKNOW, UTTAR PRADESH 226201 - 226201

MAHARAJGANJ

638. ARBIT AUTOMOBILES PVT LTD (EINA-EI-01), 120, VILL RAMPUR, TEHSIL SADAR, MAHARAJGANJ, UTTAR PRADESH.

MAHOBA

639. VELOCITY CARS (RMNA-RM-01), 12/1, SHOP AT CHARKHARI, BYPASS ROAD, NEAR PARMANAND CHOWK, MAHOBA, UTTAR PRADESH

MAINPURI

640. KULDEEP MOTORS PVT LTD (SGNA-SG-01), KHASRA NO. 1457, NAGAR PALIKA CHATRA, MAINPURI, 205001

MATHURA

641. UMA MOTORS PVT LTD (H8NA-H8-01), PLOT NO 222, MAHOLI, NEAR KIRAN HOSPITAL, MATHURA - 281004
PH :9997385999.

MEERUT

642. RADHAGOVIND WHEELS INDIA PRIVATE LIMITED (48NC-48-S1) - 0
643. TR SAWHNEY AUTOMOBILES PVT LTD (48NB-48-01), 1183/17 RITHANI, ZONE - A, SECTOR 4 NEAR PETROL PUMP, MEERUT, UTTAR PRADESH - 250103
PH :18002704142.
644. TANYA AUTOMOBILES PVT LTD (48ND-48-01), KHASRA NO. 150, VILLAGE RALI CHAUHAN, MEERUT.

MIRZAPUR

645. VARANASI MOTORS PVT LTD (6KNA-6K-01), PURJAGIR, MIRZAPUR BHADOHI ROAD, MIRZAPUR

MODINAGAR

646. SNV AUTOMOBILES PVT LTD (M7NA-M7-01), KHASRA ANO- 564 , SIKARI KALAN , MEERUT ROAD , MODINAGAR - 201204

MORADABAD

647. AKANKSHA AUTOMOBILES PVT LTD (B4NA-B4-01), RTO ROAD, LAKRI FAZALPUR, NEAR RAJAN OVERSEAS, MORADABAD - 244001
648. AKANKSHA AUTOMOBILES PVT LTD (B4NA-B4-S1) - 0

NAUGARH

649. SMARTWHEELS (QGNA-QG-01), GATA NO. 110, 111, 112 & 113, GRAM-PIPRA, POST- CHAURI MAHULANI, NEAR PAKDI CHAURAHA, TEHSIL-NAUGARH DIST. SIDDHARTHNAGAR, UTTAR PRADESH, 272153 - 272153

NOIDA

650. FAIR DEAL PREMIUM WHEELS PRIVATE LIMITED (A1ND-A1-01), A-107, SECTOR-5. NOIDA - 201301
651. MOTORCRAFT SALES PVT LTD (59NB-59-01), C 42 SECTOR 57, NOIDA, UTTAR PRADESH - 201301
652. VIPUL MOTORS PVT LTD (A1NB-A1-S1) - 0
653. VIPUL MOTORS PVT LTD (A1NB-A1-01), C1 SECTOR 57, NOIDA - 201301 - 201301
654. MAGIC AUTO PVT LTD (A UNIT OF MAGIC LEASING & FINANCE PVT LTD) (A1NE-A1-01), B-51, HOSIERY COMPLEX, NOIDA (U.P.) - 110025

PRATAPGARH

655. BRIGHT 4 WHEEL SALES PRAYAGRAJ PRIVATE LIMITED (NKNA-NK-01), GATA NO 287,VILLAGE GOPALPUR, SADAR, PRATAPGARH ,UTTAR PRADESH.

PRAYAGRAJ

656. SARASWATI (29ND-29-01), KHASRA NO. 638, ANDHAWA, TEHSIL PHOOLPUR, PRAYAGRAJ.

RAEBARELI

657. KTL AUTOMOBILE PVT LTD (HSNA-HS-01), 1481, NEAR KATHWARA BUS STAND, LUCKNOW RAIBARELI HIGHWAY, HARCHANDPUR, RAIBARELI - 229303
PH :7311190503.

RAMPUR

658. AKANKSHA AUTOMOBILES PVT LTD (6LNA-6L-01), PLOT NO 95 , ADJACENT HONDA BIKE SHOWROOM, VILLAGE- TASHKA, NEAR RAMPUR HOSPITAL, NAINITAL ROAD, RAMPUR, UTTAR PRADESH

SAHARANPUR

659. TANYA AUTOMOBILES PVT LTD (S2NA-S2-01), OPP. PHULWARI GARDEN, DELHI ROAD, SAHARANPUR PIN - 247001 - 247001

SAHIBABAD

660. MSM (JJ IMPEX) (M983-M9-N1), MARUTI SERVICE MASTERS, NEXA SERVICE, PLOT NUMBER 58/4, SITE 4, SAHIBABAD INDUSTRIAL AREA - 201010
PH :9711474930.

SHAHJAHANPUR

661. SUMITRA DS MOTORS PVT LTD (W2NA-W2-01), SH25 , RETI ROAD SHAHJAHANPUR

SIKANDRABAD

662. SKUNIVERSE AUTOMOBILE PVT LTD (CWQN-CWQ-01), 2328, OPP. AGRASEN INTER COLLEGE, DANKAUR ROAD, SIKANDRABAD, DIST.-BULANDSHAHR (UTTAR PRADESH). - 203205

SITAPUR

663. CONCEPT CARS LIMITED (6MNA-6M-01), PLOT NO 279 , CANTT STATION

SRINAGAR (UK)

664. SHAKUMBARI AUTOWHEELS PVT LTD (ANAN-AN-01), KHATA NO 26/339 , KHET NO 221 , KATULASYUN , SRINAGAR, PAURI

VARANASI

665. AGR AUTOMOBILES PVT LTD (84NA-84-01), ARAZI NO - 285,286 LUCCHERPUR, PARGANA-ATHGAWA TEHSIL, HARHUA , VARANASI - 221105
666. STAR CARS (A UNIT OF SARASWATI VEHICLES LLP) (84NB-84-01), HARDATTPUR, MOHANSARAI, VARANASI-ALLAHABAD ROAD, VARANASI - 221001

UTTARAKHAND

DEHRADUN

667. ROHAN MOTORS LTD (57NA-57-S1) - 0
668. SHAKUMBARI AUTOWHEELS PVT LTD (57ND-57-01), KHASRA NO.-15-ANA, MOHABBEWALA, SAHARANPUR ROAD, DEHRADUN-248001 - 248001
669. SHAKUMBARI AUTOWHEELS PVT LTD (57ND-57-S1) - 0
670. TANYA AUTOMOBILES PVT LTD (57NF-57-01), MOHBEWALA CHOWK, SAHARANPUR ROAD, DEHRADUN PIN 248002 - 248002
671. PREM MOTORS (57NG-57-S1)

HALDWANI

672. NAINITAL MOTORS PVT LTD (J6NA-J6-01), 5TH KM RAMPUR ROAD, JEETPUR NEGI, NEAR AMAR UJALA PRINTING PRESS, HALDWANI, UTTARAKHAND - 263139

RAJSAMAND

673. TECHNOY MOTORS INDIA PVT LTD (X2NA-X2-S1)

RISHIKESH

674. SHAKUMBARI AUTOMOBILES (AASN-AAS-01), GURUDEV PLAZA, 279/1, HARIDWAR ROAD, OPPOSITE GOVERNMENT P.G. COLLEGE, RISHIKESH, DISTRICT DEHRADUN

ROORKEE

675. SHAKUMBARI AUTOWHEELS PVT LTD (H2NA-H2-01), 5 KM MILESTONE ,NH-58,ROORKEE-DELHI ROAD ,NEAR HOTEL GODWARI,ROORKEE, UTTARAKHAND - 247667

RUDRAPUR

676. AKANKSHA AUTOMOBILES (RUDRAPUR) PVT LTD (U4NB-U4-01), KASHIPUR ROAD, OPPOSITE GREEN PARK COLONY, VILLAGE DIBDIBA, TEHSIL BILASPUR, RAMPUR, UTTRAKHAND - 244901

VIKASNAGAR

677. ROHAN MOTORS LTD (RINA-RI-01), KHASRA NO 5587, C/O BHARAT NEGI, NEAR SVM INTER COLLEGE, BABU GHAR, VIKASNAGAR, DEHRADUN WARD NO 6, UTTARAKHAND

UTTRAKHAND

RUDRAPRAYAG

678. ROHAN MOTORS (IKNA-IK-01), KHASRA NO. 149, 150, 151, KHATA NO. 7, RAINTOLI PUNAR, NEAR BATALION 10 HOTEL, BADRINATH ROAD, RUDRAPRAYAG

WEST BENGAL

ASANSOL

679. BEEKAY AUTO PVT LTD (F6NA-F6-01), NH-2 ,CHANDA MORE ,POST KALI PAHARDI, JAMMURIA DISTRICT WEST BARDHAMAN - 713339
PH :9932049425.

BANKURA

680. BHANDARI AUTOMOBILES PVT LTD (G7NA-6Q-02), VILLAGE KAMRAR MATH , CINEMA ROAD , MOUZA BIKNA

COOCHBEHAR

681. SEVOKE MOTORS PVT LTD (BWZN-BWZ-01), NEXA COOCH BEHAR CENTRAL VILL & P.O. - MAHISHBATHAN P.S. - KOTWALI, NH - 31 COOCHBEHAR,W.B. -734617 - 734617

DARJEELING

682. BEEKAY AUTO (6UNA-6U-01), BATASIA HILL CART ROAD, PO GHOOM, PS - JOREBUNGLOW, DARJEELING - 734102 WEST BENGAL - 734102

GANGTOK

683. ENTEL AUTOS (B9NA-B9-S1)

HOWRAH

684. MACHINO TECHNO SALES LTD (X7NA-X7-01), 109, 1, UPPER FORESHORE RD, CHOURA BUSTEE, SHIBPUR, HOWRAH, WEST BENGAL 711102 - 711102
PH :9830081632.

JALPAIGURI

685. PODDAR CAR WORLD PVT LTD (XYNA-XY-01), ASSAM MORE BUS STOP, SH12A, JALPAIGURI, WEST BENGAL 735102 - 735102
PH :8945533002.

JHARGRAM

686. BHANDARI AUTOMOBILES PVT LTD (BUGN-BUG-01), PLOT NO 200, KHAITAN NO 502 JL NO 370, MOUZA - JHAMDA PS JHARGRAM, DIST - JHARGRAM - WEST BENGAL

KHARAGPUR

687. BHANDARI AUTOMOBILES PVT LTD (G7NA-G7-01), CHOWRANGEE, PLOT NO-138 & 139, O T ROAD, KHARAGPUR - 721301
PH :7603076061.

KOLKATA

688. JYOTE MOTORS (BENGAL) PVT LTD (06ND-06-01), MIRANIA ROAD, ARUPOTA ON BASANTI HIGHWAY, - 700105
PH :9074158220.
689. MACHINO TECHNO SALES LTD (06NG-06-01), 98/A/2 BT ROAD,P.S - BARANAGAR, P.O. - ISI BT ROAD, KOLKATA, WEST BENGAL – 700090.
690. PREMIER CARWORLD PVT LTD (06NB-06-C1), PLOT NO 123,MICHEAL NAGAR, BESIDE NATIONAL MODEL HIGH SCHOOL, NEAR HP GYANI PETROL PUMP, KOLKATA , WEST BENGAL - 700133 - 700133

691. DEWARS GARAGE LIMITED (06NH-6-01), 1696/A, LASKARAHAT, NAZIRABAD, P.S. - SONARPUR, KOLKATA - 700150 - 700150
692. ONE AUTO (06NI-06-01), LR DAG NO 273,274,275,276 JL NO 20, RS NO 36 LR KHAITAN NO 217, PS THAKURPUKUR DIST - SOUTH 24 PARGANAS PIN 700104 - 700104

KOLKATA (TARATALA)

693. BHANDARI AUTOMOBILES (06NA-06-01), 1/NEW, TARATALA ROAD, KOLKATA, WEST BENGAL - 700088

RANAGHAT

694. STARBUST MOTORS PVT LTD (BBTN-BBW-02), NH 34 RANAGHAT, NEAR BEGOPARA, CATHOLIC CHURCH NADIA WEST BENGAL - 741232 - 741232

SILIGURI

695. SEVOKE MOTORS PVT LTD (43NA-43-01), WARD NO 42, 3RD MILE, NEXA, SEVOKE RD, NEAR SONA PETROL PUMP, CHAYAN PARA, SALUGARA, SILIGURI, WEST BENGAL - 734008

SREERAMPORE

696. STARBUST MOTORS PVT LTD (BBTN-BBT-01), NEAR ALLAHABAD BANK, MOLLARBER, SERAMPORE.

ANDAMAN AND NICOBAR ISLANDS

DIGLIPUR

1. AGENCY HOUSE (A & N ISLANDS) PVT LTD (--0B), MADHUPUR VILLAGE,TEHSIL DIGLIPUR,NORTH ANDAMAN - 744202

PORT BLAIR

2. AGENCY HOUSE (A & N ISLANDS) PVT LTD (--01), GARACHRAMA, PORT BLAIR - 744105
3. AGENCY HOUSE (A & N ISLANDS) PVT LTD (--04), NAYAGEN, PORTBLAIR - 744101

RANGAT

4. AGENCY HOUSE (A & N ISLANDS) PVT LTD (--03), NIMBUTULLA, PO RANGAT, DIST. MIDDLE ANDMAN, - 744201
PH :211546.

ANDHRA PRADESH

ADONI

5. MSA MOTORS (--01), BESIDE HP GAS YEMMIGANUR ROAD ADONI - 518301

AMALAPURAM

6. SB MOTOR CORPORATION (--01), #241/2B, BESIDE: BAPUJI PRIMARY SCHOOL MAIN ROAD, OPP. RR NAGAR, BANDARULANKA, AMALAPURAM, EAST GODAVARI (DIST) - 533201
PH :8374303303.

AMARAVATI

7. JAYALAKSHMI AUTOMOTIVES PVT LTD (--01), SURVEY NO. 29, TOWNSHIP-16, SECTOR-137, COLONY-539, BLOCK-2029, PLOT NO. 1, SUB-DIVISION-L40, MALKAPURAM LIMITS, MANDAL - THULLURU, AMARAVATI-CITY, DIST. -GUNTUR, ANDHRA PRADESH. - 522237

ANAKAPALLE

8. JAYABHERI AUTOMOTIVES PRIVATE LTD (--01), SURVEY NO.822/1 & 2, NH-5 ROAD, ANAKAPALLE, DISTT. VISHAKHAPATNAM. - 531001
PH :7093575555.

ANANTAPUR

9. JAYALAKSHMI AUTOMOTIVES PVT LTD (--01), SURVEY NO 146-3,SRI NAGAR COLONY, ANANTAPUR, ANDHRA PRADESH
10. NIVYA AUTOMOBILES PRIVATE LIMITED (--01), NH 44 RAJEEV COLONYNEAR SILPARAMAM - 515001

ANNAVARAM

11. VARUN MOTORS PVT LTD (--01), DO-NO : 5/116, SURVEY NO – 59.,CHALAMAYYA NAGAR, RAILWAY STATION ROAD, NEAR SMP BAJAJ SHOWROOM,
ANNAVARAM, EAST GODAVARI DISTRICT, ANDHRA PRADESH. - 533406
PH :9885288339.

ARAKU

12. VARUN MOTORS PVT LTD (--01), SURVEY NO 33-9/A, RAVULAGADDA VILLAGE,BESIDE GOVT DEGGRE COLLEGE,ARAKU,VISHAKAPATNAM,ANDHRAPRADESH - 531151
PH :9885317344.

ATMAKUR

13. BHARGAVI AUTOMOBILES PVT LTD (--01), D.NO. 524, NELLORE PALEM, ATMAKUR, BESIDE HERO SHOWROOM, KURNOOL - 524322

BHIANSA

14. ADARSHA AUTOMOTIVES PVT LTD (--01), SURVEY NO 448A/1, BASAR ROAD, BHAINSA,NIRMAL DISTRICT,TELANGANA - 504103
PH :8886092222.

BHIMAVARAM

15. NOVELTY REDDY AND REDDY MOTORS PVT LTD (--01), NEAR BYEPASS ROAD,UNDI ROAD,BHIMAVARAM - 534202
PH :7799771177.

BOBBILI

16. VARUN MOTORS PVT LTD (--01), D. NO. 4-64, SURVEY NO. 219/8, VILLAGE – MALLAMMAPETA, BESIDE GROWTH CENTRE, BOBBILI, DISTRICT – VIZIANAGARAM, ANDHRA PRADESH. - 535558

CHANDRAGUNDA

17. VARUN MOTORS PVT LTD (--01), CHANDRUGONDA GRAM PANCHAYAT RECORD SURVEY NO. 81/4, OPP.SAI KRISHNA PETROL BUNK - 507166

CHEPURAPALLI

18. JAYABHERI AUTOMOTIVES PRIVATE LTD (--01), 4-284, CHEEPURPALLI, VIZIANAGARAM, ANDHRA PRADESH

CHILKALURIPET

19. JAYALAKSHMI AUTOMOTIVES PVT LTD (--01), M/S JAYALAKSHMI AUTO, SURVEY NO 457/C3, CHILKALURIPET, NADENLA MANDAL, GUNTUR, ANDHRA PRADESH - 522616
PH :9989144344.

CHINTALAPUDI

20. REDDY & REDDY MOTORS (--01), RS NO.698/2 MARUTI NAGAR COURT CENTRE, ELURU-CHINTALAPUDI HIGHWAY, CHINTALAPUDI MANDAL, ANDHRA PRADESH - 534460

CHIRALA

21. JAYALAKSHMI AUTOMOTIVES PVT LTD (--04), 9-1-92, CHURCH ROAD,CHIRALA, - 523157
PH :7331151661.

CHITTOOR

22. BHARGAVI AUTOMOBILES PVT LTD (--03), 22-241/A,KATTAMANCHI TIRUPATI ROAD,CHITTOOR, - 517001
PH :8463955558.

CHODAVARAM

23. VARUN MOTORS PVT LTD (--01), SURVEY.NO: 108-2-A, 108-3-A & 108-4, GOVCHODAVARAM, DIST. VISAKHAPATNAM, - 531036
PH :9885317344.

CUDDAPAH

24. MSA MOTORS (--03), K.T. BYE PASS ROAD,CUDDPPAH,ANDHRA PRADESH, - 516001
PH :7396685628.

DARSI

25. JAYALAKSHMI AUTOMOTIVES PVT LTD (--01), SURVEY NO 1025/1, DARSI, PRAKASHAM DISTRICT, ANDHRA PRADESH - 523247

DHARMAVARAM

26. JAYALAKSHMI AUTOMOTIVES PVT LTD (--01), BESIDE SIVALAYAM TEMPLE, B.C. COLONY, POTHUKUNTA, DHARMAVARAM - 515671

DRAKSHARAMMAM

27. VARUN MOTORS PVT LTD (--01), D.NO.19-2-9/1 ,PITTAVARI STREET , DRAKSHARAMAM, RAMACHANDRAPURAM MANDAL, EAST GODAVARI DISTRICT , ANDHRA PRADESH- - 533255

ELURU

28. REDDY & REDDY MOTORS (--01), OLD NH-5 ROAD,BESIDES C R REDDY WOMEN'S COLLEFE OLD NH-5,ELURU, - 534001
PH :9705311566.

GAJAPATINAGARAM

29. JAYABHERI AUTOMOTIVES PRIVATE LTD (--01), SURVEY NO 50-14, D.NO 3-1/C, BONDAPALLI MANADALAM, GAJAPATHINAGARAM, ANDHRA PRADESH. - 535270
PH :9100818111.

GAMBHEERAM

30. JAYABHERI AUTOMOTIVES PRIVATE LTD (--02), PLOT NO. 40-45 & 48, GREEN INDUSTRIAL PARK, GAMBHERAM, ANANDPURAM, VISHAKAPATNAM. - 530052
PH :9642496789.

GAMPALAGUDEM

31. VARUN MOTORS PVT LTD (--01), R.S.NO. 11/2A, AT PEDAKOMIRA PANCHAYAT, THIRUVURU SUB DIVISION, GAMPALAGUDEM MANDAL, N.T.R DISTRICT - 521403

GIDDALURU

32. JAYALAKSHMI AUTOMOTIVES PVT LTD (--01), S NO 716, BESIDE PADMAVATI GARDENS, GIDDALUR - 523357

GUDIVADA

33. VARUN MOTORS PVT LTD (2603--02), D NO. 1-621,AUTONAGER 1ST LANE,GUDIVADA - 521301
PH :9885651383.

GUDUR

34. BHARGAVI AUTOMOBILES PVT LTD (--01), SURVEY NO.1619/3A,GUDUR BYPASS, GUDUR RURAL, GUDUR DISTT. NELLORE, A.P. - 524101
PH :9652984999.

GUNTUR

35. JAYALAKSHMI AUTOMOTIVES PVT LTD (--01), D-N-8-24-31,MANGALAGIRI ROAD,GUNTUR - 522001
36. JAYALAKSHMI AUTOMOTIVES PVT LTD (--05), AT 1-14-114, OPP. HINDU COLLEGE, BANDLAMUDI GARDENS, AMARAVATI ROAD, GUNTUR-522003, AP - 522203
37. JAYALAKSHMI AUTOMOTIVES PVT LTD (--06), SURVEY NO 509, D.NO 25-11-50 TOWN, WARD NO 22, OPPOSITE ITC BUILDING, R AGRAHARAM, NAGARAPALAM ROAD,GUNTUR, - 522004
PH :8374847777.
38. VARUN MOTORS PVT LTD (--01), DOOR NO. 25-16-176, IN D.NO. 169/C1 & 2, ANKIREDDYPALEM, GUNTUR CHIALAKALURIPET R - 522007

HANUMAN JUNCTION

39. SANTOSH AUTOMOTORS PVT LTD (--01), SY NO. 569/1 BESIDES NH5, VELURU VILLAGE, BAPULAPADU MANDAL, HANUMAN JUNCTION KRISHNA DISTRICT PIN 521105 - 521115
PH :9703633755.

HINDUPUR

40. JAYALAKSHMI AUTOMOTIVES PVT LTD (3602-36-01), PLOT NO.83,BYPASS ROAD,BESIDE AR HOSPITARTC COLONY,CHAITANYANAGAR, HINDUPUR - 515201

ICHAPURAM

41. JAYABHERI AUTOMOTIVES PRIVATE LTD (--01), SURVEY NO. 105/3 , 105/4 AND 229/7, ICHAPURAM, BALAKRISHNAPURAM PANCHAYAT,MUNIBHADRA VILLAGE,ANDHRA PRADESH. - 532312

JAGGAIAHPETA

42. VARUN MOTORS PVT LTD (2603--05), DOOR NO. 2-20, MUTHYALAMMA GUDI STREET JAGGAIAHPET TOWN, JAGGAIAHPET, KRISHNA DISTT. - 521175

JAGGAMPET

43. SB MOTOR CORPORATION (--01), M/S D.NO 10-37, JAGGAMPETA, EAST GODAVARI DISTRICT, ANDHRA PRADESH - 533435
PH :8886677759.

JAMMALAMADUGU

44. ADARSHA AUTOMOTIVES PVT LTD (--01), 21/570/A,TADIPATRI ROAD, JAMMALAMADUGU,KADAPA - 516434

JANGAREDDYGUDEM

45. REDDY & REDDY MOTORS (--02), NEAR R&B GUEST HOUSE,ELURU ROAD,JANGAREDDYGUDEM, - 534447
PH :9912563666.

K. KOTAPUDU

46. VARUN MOTORS PVT LTD (--01), NEAR SAMPATH MOTORS, S.H: 142,K.KOTAPADU (VILLAGE & MANDAL),VISAKHAPATNAM – DIST. PIN-
531034 A.P - 531034

KAIKALURU

47. SANTOSH AUTOMOTORS PVT LTD (--01), SY. NO. 127/7 &9, OPP. NAIDU COMPLEX, AATAPAKA, KAIKALURU MANDAL, DIST. KRISHNA - 521333

KAKINADA

48. SB MOTOR CORPORATION (--01), D. NO. 52-10-36/3,NEAR AMAR GHATI CENTER,KARAPA ROAD, KAKINADA - 533001
PH :9885119888.

KALYANADURGAM

49. JAYALAKSHMI AUTOMOTIVES PVT LTD (--01), SURVEY NO.328-B,DODAGATTA ROAD, NEAR NAGULA DHINNE,KALYANADURGAM - 515761

KANCHIKACHERLA

50. VARUN MOTORS PVT LTD (--01), SURVEY NO. 510/5, DOOR NO. 13-144, 146, 13TH WARD, KANCHIKACHERLA VILLAGE AND MANDAL, KRISHNA DIST., ANDHRA PRADESH. - 521180

KANDUKURU

51. JAYALAKSHMI AUTOMOTIVES PVT LTD (--01), SURVEY NO. 414, MAHADEVAPURAM VILLAGE, O. V. ROAD, KANDUKURU MANDAL, DISTRICT – PRAKASHAM, ANDHRA PRADESH. - 523105

KANIGIRI

52. JAYALAKSHMI AUTOMOTIVES PVT LTD (--01), SURVEY NO 793, PLOT NO 11,12 , KANIGIRI, PRAKASHAM DISTRICT, ANDHRA PRADESH - 523230

KAVALI

53. BHARGAVI AUTOMOBILES PVT LTD (--05), OPP. VENKATESWAR SWAMI TEMPLE, AUTO NAGAR MAIN ROAD
KAVALI, DISTT. NELLORE - 524201
PH :9248702567.

KHAMMAM

54. VARUN MOTORS PVT LTD (2603--09), D.NO-15-19-48/3, PLOT NO.119, KHANAPURAM INDUSTRIAL AREA - 521108

KORUKONDA

55. VARUN MOTORS PVT LTD (--01), D. NO:1-220, NEAR INDIAN OIL PETROL BUNK, JUMBUPATNAM KORUKONDA, EAST GODAVARI- 533289. - 533289

KURNOOL

56. MSA MOTORS (--01), AUTO NAGAR,INDUSTRIAL ESTATE, NH-7, KURNOOL - 518004
PH :9912826682.
57. ADARSHA AUTOMOTIVES PVT LTD (--01), SURVEY
NO 105, DINNEDEVARAPADU VILLAGE, KURNOOL, ANDHRA PRADESG - 518001
PH :9160182222.

KURUPUM

58. VARUN MOTORS PVT LTD (--01), SY.NO: 76/2B1, RAVADA ROAD, KURUPAM - 535524

MACHERLA

59. JAYALAKSHMI AUTOMOTIVES PVT LTD (--01), D.NO. 343/7, 343/5-3, 15-2-3, MACHERLA, MACHERLA MUNICIPALITY. - 522426

MADANAPALLI

60. BHARGAVI AUTOMOBILES PVT LTD (--01), SURVEY NO.762, BASIKONDA VILLAGE, MADANPALLI, CHITTOOR DISTT. ANDHRA PRADESH - 524101
PH :9959893434.

MADHURAWADA

61. JAYABHERI AUTOMOTIVES PRIVATE LTD (--01), SY, NO. 180/2B, PARADESIPALEM,MADHURWADA, ANDHRA PRADESH - 530048
PH :8886669985.

MALKIPIURAM

62. VARUN MOTORS PVT LTD (--01), SURVEY NO 49/6A, MALKIPURAM VILLAGE AND MANDAL, EAST GODAVARI DISTRICT, ANDHRA PRADESH - 533250
PH :9885317344.

MANDAPETA

63. SB MOTOR CORPORATION (--01), BLOCK NO. 4, D. NO. 4-1-64, MANDAPETA, DISTRICT – EAST GOADAVARI, ANDHRA PRADESH . - 533308
PH :8886664090.

MARKHAPURAM

64. JAYALAKSHMI AUTOMOTIVES PVT LTD (--01), D. NO 4/515, RAILWAY STATION ROAD, MARKAPURAM, DIST: PRAKASAM, ANDHRA PRADESH-523316 - 523316

MOVVA

65. VARUN MOTORS PVT LTD (--01), D NO:4-64,KODALI ROAD,MOVVA POST AND MANDAL ,KRISHNA DISTRICT,ANDHRA PRADESH-521135 - 521135

MYLAVARAM

66. VARUN MOTORS PVT LTD (--01), D NO. 2-176/2, MAIN ROAD, MYLAVARAM, KRISHNA DISTRICT, PIN-521230, ANDHRA PRADESH - 521230

NAGARI

67. VISHNU CARS PVT LTD (--01), SURVEY NO 213/5, 1A& 1B, BALAJI GOLDEN CITY, NAGARI, DIST- CHITOOR, ANDHRA PRADESH - 517590

NAIDUPET

68. SB MOTOR CORPORATION (--01), M/S SURVEY NO 11-2, JUVALAPALEM VILLAGE, NAIDUPETA, ANDHRA PRADESH
STATE: - 524126
PH :9248747777.

NAKKAPALLI

69. VARUN MOTORS PVT LTD (--01), SURVEY NO 202/3, 203/4,PEDGUMMULURU GRAM PANCHAYAT,
RAYAVARAM
MANDAL,NAKKAPALLI,VISHAKAPATNAM, ANDHRA PRADESH - 531081
PH :9885317344.

NANDIGAMA

70. VARUN MOTORS PVT LTD (--01), RE SURVEY NO. 601/1B, NH-9 ROAD, NANDIGAMA, DIST. -KRISHNA, ANDHRA PRADESH. - 521185

NANDYAL

71. MSA MOTORS (--01), SURVEY NO. 333, VUDUMALPURAM, MANDAL – NANDYAL, OPP. AUTO NAGAR, NANDYAL, DISTRICT – KURNOOL. - 518501
PH :9490666616.

NARASARAOPET

72. JAYALAKSHMI AUTOMOTIVES PVT LTD (--03), P.NO 267/A1, CHILAKALURIPETA ROAD ,NARSAROAPET, GUNTUR , ANDHRA PRADESH NEAR RELIANCE PETROL PUMP BUNK,VINUKONDA ROAD, NARASAROAPET, GUNTUR, - 522603

NARSAPURAM

73. NOVELTY REDDY AND REDDY MOTORS PVT LTD (--01), SY NO. 98/7, NARSAPURAM– CHINCHINDA BYPASS ROAD,NARSAPURAM, PALAKOLLU MANDAL, WEST GODAVARI DISTRIC
T,ANDHRA PRADESH - 534206
PH :9703900011.

NARSIPATNAM

74. JAYABHERI AUTOMOTIVES PRIVATE LTD (--01), OPP. RDO BUNGLAW, BANK COLONY, VISAKHAPATNAM ROAD, NARSIPATNAM - 531116
PH :7702333513.

NELLORE

75. BHARGAVI AUTOMOBILES PVT LTD (--01), D.NO.25/II/97 INDUSTRIAL ESTATE, A.K. NAGAR, P.B.NO.18, NELLORE(A.P.) - 524004
PH :9248742225.
76. BHARGAVI AUTOMOBILES PVT LTD (--04), A2, INDUSTRIAL ESTATE,A.K. NAGAR,NELLORE, - 524004
PH :9248727888.
77. VISHNU CARS PVT LTD (--01), FIELD NO. 628 /SURVEY NO. 877, 878/A/4 AND 883/A/1A, NELLORE BIT-II, BESIDES GSR GARDENS, BALAJI NAGAR, NH-16, NELLORE CITY. - 542002
PH :7337340778.
78. BHARGAVI AUTOMOBILES PVT LTD (--07), PLOT NO 11, WOOD COMPLEX, VEDAYAPALEM, NELLORE - 524004

NIDDAVOHOLU

79. NOVELTY REDDY AND REDDY MOTORS PVT LTD (--01), D.NO 479/5, SAMISRAGUDEM , NIDADAVOLU, WEST GODAVARI, ANDHRA PRADESH - 534301

NUZVID

80. VARUN MOTORS PVT LTD (2603--03), BESIDE R T C BUS DEPOT.,OLD D M OFFICE,VIJAYAWADA ROAD, NIZVID - 521201

ONGOLE

81. JAYALAKSHMI AUTOMOTIVES PVT LTD (--02), THROVAGUNTA COMPANY CENTRE,NH-5,GUNTUR ROAD,ONGOLE,PRAKASAM DISTRICT. - 523003
PH :9701055955.

PADERU

82. JAYABHERI AUTOMOTIVES PRIVATE LTD (--01), DOOR NO.5-73, BESIDE MODHAKONDAMMA TEMPLE, NEAR OLD BUS STAND, G. MADUGULA ROAD - 524341

PALAKONDA

83. VARUN MOTORS PVT LTD (--01), SURVEY NO. 8, ANAVARAM GRAMAM, PALAKONDA, SRIKAKULAM DISTRICT, ANDHRA PRADESH. - 532440

PALASA

84. JAYABHERI AUTOMOTIVES PRIVATE LTD (--01), SURVEY NO. 63 OF VILLAGE – PURUSHOTTAPURAM, PALASA MANDAL, KASIBUGGA MUNICIPALITY, DISTRICT – SRIKAKULAM, ANDHRA PRADESH. - 532221

PALMANERU

85. VISHNU CARS PVT LTD (--01), SURVEY NO. 184/3, PALAMANERU VILLAGE, GANGAVARAM MANDALAM, DIST. CHITTOR, PIN-517408, ANDHRA PRADESH - 517408

PARVATHIPURAM

86. JAYABHERI AUTOMOTIVES PRIVATE LTD (--01), SY.NO. 195-1A, NEAR TBR THEATRE, NARSIPURAM, PARVATHIPURAM MANDAL, DISTRICT – VIZIANAGARAM, ANDHRAPRADESH,PINCODE – 535522 - 535522 PH :9100818111.

PATHAPATNAM

87. VARUN MOTORS PVT LTD (--01), D.NO 4-245,SURVEY NO 264/1A, PATHAPATNAM, SRIKAKULAM, ANDHRA PRADESH - 532213 PH :9885317344.

PEDDAPURAM

88. VARUN MOTORS PVT LTD (--01), S NO: 19-1-412/2, SUDHA COLONY, REVENUE WARD NO-15, PEDDAPURAM- 533 437. KAKINADA DIST. A.P - 533437

PENDURTHI

89. VARUN MOTORS PVT LTD (--01), SURVEY NO.107/1B, VELAMPETA, ANAKAPALLI TO PENDURTHI HIGHWAY, NEAR BRIDGE, PENDURTHI DISTT: VISAKAPATNAM - 530047 PH :9885438455.

90. VARUN MOTORS PVT LTD (--02), SURVEY NO 240/1,2 & 241, PENDURTHI, VIZAG - 531173 PH :9703843737.

PIDUGURALLA

91. JAYALAKSHMI AUTOMOTIVES PVT LTD (--01), SURVEY NO. 897/16, PIDUGURALLA, DISTRICT – GUNTUR, ANDHRA PRADESH. - 522413

PITHAPURAM

92. SB MOTOR CORPORATION (--01), NO. 11-2-114, 11TH WARD, KAKINADA-KATHIPUDI ROAD, PITHAPURAM, EAST GODAVRI DIST., ANDHRA PRADESH. - 533450

PONNUR

93. JAYALAKSHMI AUTOMOTIVES PVT LTD (--01), PLOT NO. 4, D.NO. 213-1, VAISHNAVI NAGAR, PONNUR, GUNTUR, ANDHRA PRADESH. - 522124

PRODUTTHUR

94. ADARSHA AUTOMOTIVES PVT LTD (--02), 11/301,BESIDE-DMART MYDUKUR ROAD - 516360

PUSAPTIRAGA

95. VARUN MOTORS PVT LTD (4603--11), SY.NO: 16/21, CHODAMMA AGRAHARAM - 535002

RAJAHMUNDRY

96. SB MOTOR CORPORATION (--01), OPP.FCI GOWDOWN,JAILROAD,LALACHERUVLI,RAJAMUNDRY - 533101

97. SB MOTOR CORPORATION (--03), D. NO. 3-243, NH-5, ROAD, HUKUMPETA, RAJAHMUNDRY. - 533107

98. VARUN MOTORS PVT LTD (--01), SURVEY NO. 660, PALACHERLA VILLAGE OF RANJANAGRAM MANDAL, RAJAHMUNDRY, EAST GODAVARI DSIT.. - 533102 PH :9642225289.

RAJAM

99. VARUN MOTORS PVT LTD (--01), SURVEY NO 44, SARATHI VILLAGE, RAJAM, SRIKAKULAM, ANDHRA PRADESH. PLOT NO. 44, SARATHI NAGAR, RAJAMNAGAR PANCHAYAT, RAJAM, DISTRICT - SRIKAKULAM, ANDHRA PRADESH - 532127 PH :7799666998.

RAMPACHODAVARAM

100. VARUN MOTORS PVT LTD (--01), SURVEY NO 14/1,IRLAPALLY VILLAGE, RAMPACHODAVARAM,ANDHRA PRADESH - 533288 PH :9885288339.

RAYACHOTY

101. ADARSHA AUTOMOTIVES PVT LTD (--01), #38/105-8-8, CHITOOR ROAD, REVENUE WARD NO 88, RAYACHOTY - 516269

REPALLE

102. JAYALAKSHMI AUTOMOTIVES PVT LTD (--01), D.NO 430, BESIDE ESAR PETROL BUNK, REPALLE, DISTRICT: GUNTUR, ANDHRA PRADESH - 522265 PH :8374847777.

S KOTA

103. JAYABHERI AUTOMOTIVES PRIVATE LTD (--01), SURVEY NO 113/3,MALLIPUDI MADHURA VENKATARAMANAPETA, SRUNGAVARAPUKOTA, VIZIANAGARAM, ANDHRA PRADESH - 535145 PH :9100818111.

SALUR

104. VARUN MOTORS PVT LTD (--01), D. NO:139, NH-43, KOTTAKKI (VIL), RAMABADRA PURAM, SALUR-535579, MANYAM - 535579

SHAHABAD

105. GEM MOTORS (INDIA) PVT LTD (--01), SURVEY NO 467/1 ,SHABAD ,RANGA REDDY - 509217

SOMPETA

106. VARUN MOTORS PVT LTD (--01), KHATA NO 406,407,408 DENOTED IN SURVEY NO 241/1,MOGILIKOTURU VILLAGE, SOMPETA, SRIKAKULAM, ANDHRA PRADESH - 532284

SRIKAKULAM

107. VARUN MOTORS PVT LTD (4603--09), PEDDA PADDU ROAD,ARASAVILLI (P.O.),SRIKAKULAM, - 532001 PH :9985477155.

108. JAYABHERI AUTOMOTIVES PRIVATE LTD (4606--04), SURVEY NO 22/7P,22/8 AND SURVEY NO 29/12,16,17, BALAGA RURAL,SRIKAKULAM CITY, DISTRICT: SRIKAKULAM - 532001 PH :9100818111.

SULURUPETA

109. BHARGAVI AUTOMOBILES PVT LTD (--01), S.K.S KALYANA MANDAPAM, OPPOSITE KOTAPOLLUR RD, SULLURUPETA 524121 - 524121

TADA

110. VISHNU CARS PVT LTD (--01), SURVEY NO 58/3,TADA, NELLORE DISTRICT - 524401 PH :9840434242.

TANUKU

111. NOVELTY REDDY AND REDDY MOTORS PVT LTD (--01), NH-5 ROAD, NEAR WOMEN'S COLLEGE, BESIDE IOC PETROL PUMP, TANUKU, DISTT: WEST GODAVARI(ANDHRA PRADESH) - 534211 PH :9912341624.

TATIPAKA

112. VARUN MOTORS PVT LTD (--01), D-2-96/2 ,NAGARAM VILLAGE.TATIPAKA, EAST GODAVARI DT ,ANDHRAPRADESH -

TEKKALI

113. VARUN MOTORS PVT LTD (--01), SURVEY NO 497-4, RAGHUNADHAPURAM, TEKKALI MAIN RD, TEKKALI, ANDHRA PRADESH - 532201

TENALI

114. JAYALAKSHMI AUTOMOTIVES PVT LTD (--01), D.NO 131/1, SULTANABAD, GUNTUR MAIN ROAD, TENALI KAVI RAJA NAGAR, GUNTUR ROAD, TENALI, GUNTUR DISTT. - 522002

THAGARAPUVALASA

115. VARUN MOTORS PVT LTD (--01), SURVEY NO.11/2B,11/3,NAGARAMPALEM VILLAGE, NH-16, NAGARAMPALEM GRAMA PANCHAYAT LIMITS, THAGARAPUVALASA, BHEEMUNIPATNAM MANDAL, VISHAKAPATNAM, - 531162

TIRUPATI

116. BHARGAVI AUTOMOBILES PVT LTD (--02), 11/66/1,TIRUPATI RENIGUNTA ROAD,TIRUPATI, - 517507 PH :7997969946.

117. BHARGAVI AUTOMOBILES PVT LTD (--06), DOOR NO: 22-9-57/5G, REVENUE WARD NO-22, THIMMINAIDU PALEM, RENIGUNTA ROAD, TIRUPATI - 517501 - 517501 PH :7997969919.

118. VISHNU CARS PVT LTD (--01), SURVEY NO. 192/3A2A, 200' CHENNAI – TIRUPATI HIGHWAY, KOTRAMANGALAM,RENIGUNTA MANDAL, TIRUPATI - 517520 PH :9154971551.

TIRUVURU

119. SANTOSH AUTOMOTORS PVT LTD (--01), D NO. 23-1/5, OPP. AYYAPA SWAMY TEMPLE, MAIN ROAD, TIRUVURU. - 521235

TUNI

120. SB MOTOR CORPORATION (--01), D. NO. 65-31-15/1, OPP. FCI GODOWNS, NARAYANAPURAM, TUNI, EAST GODAVARI, ANDHRA PRADESH - 533401 PH :7661893888.

VENKATAGIRIKOTA

121. BHARGAVI AUTOMOBILES PVT LTD (--01), M/S BHARGAVI AUTOMOBILES, BESIDE INDIAL OIL BUNK,GMR FUNTION HALL,DARASALLA,PALLIKUPPAM,KUPPAM ROAD,V KOTA - 517242

VENKATAPGIRI

122. BHARGAVI AUTOMOBILES PVT LTD (--01), SURVEY NO 166,169/1,169/2,RTC COLONY,VENKATAGIRI, NELLORE, ANDHRA PRADESH - 524132 PH :9248747777.

VIJAYAWADA

123. VARUN MOTORS PVT LTD (2603-26-01), 48-17-4/1,RING ROAD,VIJAYAWADA - 520008 PH :9885576602.

124. VARUN MOTORS PVT LTD (2603-26-06), SURVEY NO.561/1, 562/5 & 561/3, 562/6 KESARAPALLY,VIJAYAWADA, KRISHNA DISTRICT, A.P. - 521102 PH :8297241177.

125. SANTOSH AUTOMOTORS PVT LTD (2607--01), SURVEY NO. 223/5, D. NO. 11-61/2, KANURU PANCHAYAT, PENAMALURU MANDAL, VIJAYAWADA, KRISHNA DISTRICT, ANDHRA PRADESH. - 520010

126. VARUN MOTORS PVT LTD (2603--07), DOOR NO. 1-4-208 AND 1-4-208(1), IN R.S. NO. 33/3A, BHAVANIPURAM, VIJAYAWADA, MUNICIPAL CORPORATION, VIJAYAWADA, ANDHRA PRADESH. - 520012 PH :9642225291.

127. SANTOSH AUTOMOTORS PVT LTD (--02), D NO. 77-42-16A, OPP, NUNNA FIRE STATION, PRAKASH NAGAR, INNER RING ROAD, VIJAYAWADA - 520015 PH :7799787932.

128. VARUN MOTORS PVT LTD (2603-26-08), SURVEY NO 207/7, 207/8B2, 207/15B, D-NO 8-103, NEAR SHIVALAYAM TEMPLE, ENIKEPADU, VIJAYAWADA, KRISHNA DISTRICT, ANDHRA PRADESH - 521108
PH :9885576602.

VIJAYWADA

129. JAYABHERI AUTOMOTIVES PVT LTD (--05), D.NO.40/17-192/1H, LABBIPET, VIJAYAWADA - 520002

VINUKONDA

130. JAYALAKSHMI AUTOMOTIVES PVT LTD (--01), SURVEY NO 239/3A,237/3, VINUKONDA, PALNADU DISTRICT, ANDHRA PRADESH - 522647
PH :8374847777.

VISHAKHAPATNAM

131. VARUN MOTORS PVT LTD (4603-46-0E), PLOT NO 88,BESIDES POLICE STATION,SRINAGAR,GAJUWAKA - 530026
PH :9703843737.
132. VARUN MOTORS PVT LTD (4603-46-08), DOOR NO. 58/2,BLOCK NO. 5,BALAJI NAGAR, OPP. ANDHRA UNIVERSITY, SIRIPURAM - 580003
133. VARUN MOTORS PVT LTD (4603-46-0F), D-25, INDUSTRIAL ESTATE, MARRIPALLEM, BESIDES COLA MANCHU KONDA GARDENS, VISAKHAPATNAM., - 530007
PH :9885511911.
134. JAYABHERI AUTOMOTIVES PRIVATE LTD (4606-46-01), PLOT NO. A-9, INDUSTRIAL ESTATE, VISHAKAPATANAM, ANDHRA PRADESH - 530018
PH :8886332209.
135. JAYABHERI AUTOMOTIVES PRIVATE LTD (4606--02), D.NO:51-17-2 , NH-5, KRANTHINAGAR, VISAKHAPATNAM,(ANDHRA PRADESH). - 530013
136. VARUN MOTORS PVT LTD (4607-46-01), S. NO. 8, KAPPARADA VILLAGE, BESIDE IOCL PETROL BUNK, MANCHUKONDA GARDENS, MURALI NAGAR, NATIONAL HIGHWAY, VISHAKAPATNAM. - 530007
PH :7799124243.
137. JAYABHERI AUTOMOTIVES PRIVATE LTD (4606--03), SURVEY NO. 119/6, KURMANNAPALEM, GAJUWAKA MANDAL, VIZAG, ANDHRA PRADESH. - 530046
PH :8897541234.
138. VARUN MOTORS PVT LTD (4603--0K), SURVEY NO. 394 & 395, PLOT NO. 7 AT VILLAGE – DUPPITURU, MANDAL – ACHUTAPURAM, DISTRICT – VISHAKAPATNAM, ANDHRA PRADESH. - 531011
PH :9966877133.
139. VARUN MOTORS PVT LTD (4603-46-0L), SURVEY NO. 408/1 OF MADHURAWADA VILLAGE, RUSHIKONDA ITI SEZ, VISHAKAPATNAM RURAL MANDAL, VISHAKAPATNAM DISTRICT, ANDHRA PRADESH. - 530045
PH :9885315344.
140. VARUN MOTORS PVT LTD (4603-46-1B), SURVEY NO. 2/A, SECTOR XI, MVP COLONY, VISHAKAPATNAM. - 530017
141. VARUN MOTORS PVT LTD (4603-46-10), SURVEY NO 228/224, WARD NO 19, AGNAMPUDI,VIZAG - 533053
PH :9885317344.
142. VARUN MOTORS PVT LTD (4603-46-13), D.NO: 3-83, NH-16 ROAD, BESIDE ARCHIAN GRANITES, YENDADA - 530045

VISSANNAPETA

143. VARUN MOTORS PVT LTD (--01), RS NO. 434/10, WARD NO. 10, VISSANNAPETA, KRISHNA DISTRICT, ANDHRA PRADESH - 521215
PH :9885576602.

VIZIANAGARAM

144. VARUN MOTORS PVT LTD (4603--0C), OPPOSITE SUN SCHOOL, 100 FEET RING ROAD, VIZIANAGARAM, VIZIANAGARAM - 535001
PH :8886721213.
145. JAYABHERI AUTOMOTIVES PRIVATE LTD (--01), SY NO: 108/12B & 109/2A, PLOT NO B2, B3 & B4, VT AGRAHARAM, ,VIZIANAGARAM, 535004 - 535001
PH :7702333514.

YANAM

146. SB MOTOR CORPORATION (--01), SURVEY NO 82-2,TALLAREVU MANDAL,YANAM, EAST GODAVARI DISTRICT - 533463
PH :8886677759.

YELAMANCHILI

147. JAYABHERI AUTOMOTIVES PRIVATE LTD (--01), SURVEY NO. 19-1, 2, 3, 45/1, 45/2&3, KOKIRAPALLI, YELAMANCHILI, NARSIPATNAM, VIZAG DIST., ANDHRA PRADESH. - 531055

YELESWARAM

148. VARUN MOTORS PVT LTD (--01), VARUN MOTORS P.LTD,DO-NO – 2-4-41,BESIDE GOLLAJI GARU BUNK,YERRAVARAM ROAD,YELESWARAM – 533429 - 533429
PH :9885511911.

ARUNACHAL PRADESH

BHALUKPONG

149. D Y MOTORS (--01), NEAR SBI UPPER MARKET, BHALUKPONG, WEST KAMENG , ARUNACHAL PRADESH - 790114
PH :8415075164.

ITANAGAR

150. D Y MOTORS (-75-01), LPC NO - DC/ICC/LPC, BORUM VILLAGE, PO/PS- NAHARLAGUN, PAPUM PARE DIST, ARUNACHAL PRADESH - 791100
PH :8415075164.

NAMSAI

151. D Y MOTORS (--01), 2 MILES, NH 52, NH15, NAMSAI, ARUNACHAL PRADESH 792103 - 792103

PASSIGHAT

152. D Y MOTORS (--01), OPPOSITE TO DANGARIA MANDIR RANAGHAT PASIGHAT - 791102

ROING

153. D Y MOTORS (--01), P.O/P.S-RAYAND, ROING ROAD,ROING, 792110, ARUNACHAL PRADESH - 792110

RUKSIN

154. D Y MOTORS (--01), RUKSIN IN EAST SIANG DISTRICT, ARUNACHAL PRADESH - 787060
PH :8415075164.

ASSAM

BADARPUR

155. JAIN UDYOG (--01), NH-37,SILCHAR KARIMGANJ ROAD,PO UMARPUR,PART-1,BADARPUR, - 788803

BAGHA BAZAR

156. JAIN UDYOG (--01), OPPOSITE TOBAM IDDGAH, VILL BONGRAM,BAGHA BAZAR - 788120

BAHARI

157. PODDAR CAR WORLD PVT LTD (--01), DAG NO 738, 739, UNDER MOUZA CHENGA, BARPETA DISTRICT - 781302

BAIHATA CHARIALI

158. PALLAVI MOTORS PVT LTD (--01), DAG NO. 1042, PATTA NO. 17, MOUZA – BORBANKHAR, P.S. – BAIHATA CHARIALI, DISTRICT – KAMRUP, ASSAM - 781381
PH :9864052488.

BANGALIPARA

159. MITTAL AUTOZONE (--01), BANGALIPARA,, BANGALI PARA, - 781364

BARAMA

160. MITTAL AUTOZONE (A UNIT OF SBM AUTOMOBILES PVT LTD) (--01), VILLAGE - BARJAR, PO & PS - BARAMA, ASSAM -781346 - 781346
PH :8638487401.

BARPETA

161. BHARATI MOTORS PVT LTD (--02), SIMULGURI,NH-31,DISTRICT-BARPETA, ASSAM - 781313
PH :7002819523.
162. PODDAR CAR WORLD PVT LTD (--01), WARD NO. 1, BILHORTARIHATI,, NEAR EMPLOYEE EXCHANGE OFFICE,, BARPETA TOWN, PIN-781301, ASSAM, - 781301

BIJOYNAGAR

163. PODDAR CAR WORLD PVT LTD (--01), AT/PO - BIJOYNAGAR, INDIAN OIL PETROL PUMP, KAMRUP DIST.,BIJOYNAGAR - 781125
PH :9864209733.

BISWANATH CHAIRALI

164. RAMLAL DURGADUTT MOTORS PVT LTD (--01), DAG NO- 7,8,9 PERIODIC PATTA NO - 24, REVENUE VILLAGE, BRAHMAPUTRA CHAPORI, MOUZA - BAGHMORA - 784176
PH :8724087940.

BOKAKHAT

165. RAMLAL DURGADUTT MOTORS PVT LTD (--01), NORA GAON ROAD, BENGENAKHOWA, ASSAM 785601 - 785601

BONGAIGAON

166. BHARATI MOTORS PVT LTD (--01), CHAPAGURI ROAD, BONGAIGAON - 783830

CHAMATA

167. PALLAVI MOTORS PVT LTD (--01), DAG NO.1137, PATTA NO.376, MOUZA – DAHRAMAPUR, CHAMATA DISTT. NALBARI, ASSAM - 781306

CHAYGAON

168. PALLAVI MOTORS PVT LTD (--01), CHAYGAON OUGURI CHOWK, NEAR BHARAT PETROL PUMP - 443301

DAYANGMUKH

169. BAJRANG CAR WORLD (A UNIT OF MAA VAISHNAVI AUTOMOTIVE PVT LTD) (--01), KHERONI,DAYANMUKH,DIST WEST KARBI ANGLONG - 782448

DHEKIAJULI

170. RAMLAL DURGADUTT MOTORS PVT LTD (--01), DAG NO.242, K.P. PATTA NO.88, VILLAGE-BHAKUAMARI, MOUZA-BORCHOLA, BESIDES-NH15, DHEKIAJULI, DISTT. SONITPUR, ASSAM. - 784110
PH :9706568722.

DHEMAJI

171. SAIKIA AUTO PVT LTD (--02), NALANIPAM KONCH GAON,NH-52,DHEMAJI (ASSAM) - 787057
PH :8638725209.

DHING

172. BAJRANG CAR WORLD (A UNIT OF MAA VAISHNAVI AUTOMOTIVE PVT LTD) (--01), DHING TOWN, MOIZABARI ROAD - 782123

DIBRUGARH

173. JAYBEE AUTO AGENCIES PVT LTD (--01), CHIRING CHAPARI, T.R. PHUKAN ROAD, P.O. DIBRUGARH (ASSAM) - 786001
PH :9954799273.

174. BIMAL AUTO AGENCY (--01), DAG NO. 104, GHARBANDICHUK JARUA GAON, MOUZA - MANKHATTA KANIKAR, DIST.-DIBRUGARH, ASSAM. - 786004

DIGBOI

175. VISHAL CAR WORLD PVT LTD (--01), BORBIL NO. 1, NEAR LIONS CLUB, NH-38, P.O. – DIGBOI, DISTRICT – TINSUKIA , ASSAM. - 786171

DIMAKUCHI

176. PALLAVI MOTORS PVT LTD (--01), DIMAKUCHI TOWN, DIMAKUCHI UDALGURI ROAD, NEAR SBI DIMAKUCHI BRANCH,DIST- UDALGURI - 781352

DIPHU

177. RAMLAL DURGADUTT MOTORS PVT LTD (--01), MANJA ROAD, DILLAJI, DIPHU, KARBI ANGLONG, ASSAM - - 782460
PH :9707556868.

DOBOKA

178. RAMLAL DURGADUTT MOTORS PVT LTD (--01), WARD NO 4 DABOKA TOWN - 782440

DULIAJAN

179. JAYBEE AUTO AGENCIES PVT LTD (--01), JAYBEE AUTO AGENCIES, TIPLING TINIALI, DULIAJAN DIST. DIBRUGARH - 786602
PH :7002722358.

GOALPARA

180. BHARATI MOTORS PVT LTD (--01), PO: KALYANPUR, VILLAGE: SOLMARI, P/S: AGIA, NH: 37, DISTRICT: GOALPARA, ASSAM - 781301
PH :9101940372.

GOLAGHAT

181. RAMLAL DURGADUTT MOTORS PVT LTD (--01), DAG NO. - 718, 684 & 706, PATTA NO 213, 168 & 192, KURUKA GAON, P.O - MORANGI, P.S -GOLAGHAT, DIST: GOLAGHAT, ASSAM PIN-785702 - 785702
PH :7002099547.

GORAIMARI

182. BAJRANG CAR WORLD (A UNIT OF MAA VAISHNAVI AUTOMOTIVE PVT LTD) (--01), DAG NO- 3, KP PATTA NO - 11, VILLAGE- CHALABASTI, MOUZA- GORAIMARI - 783390
PH :7002279100.

GUWAHATI

183. BIMAL AUTO AGENCY (--01), JHALUKBARI, GUWAHATI. - 781014

184. PALLAVI MOTORS PVT LTD (--01), DAG NO. 1&2,NEXT TO DEPTT. OF FAMILY WELFARE,SIX MILE. KHANAPARA G.S. ROAD, GUWAHATI - 781022

185. PODDAR CAR WORLD PVT LTD (--01), HENGRABARI ,VIP ROAD,GUWAHATI - 781036

186. BIMAL AUTO AGENCY (--01), CHANDMARI, BAMUNI MAIDAN, OPP SBI NEW GUWAHATI BRANCH, GUWAHATI - 781021

187. BIMAL AUTO AGENCY (--02), BEHARBARI,BEHIND DHOOM RESTAURANT, NH-37,GUWAHATI - 781028

188. PODDAR CAR WORLD PVT LTD (--01), NH-37, NEAR, GORCHUK CHAIRALI, GUWAHATI (ASSAM). - 781029

189. BIMAL AUTO AGENCY (--03), BESIDE NRL PETROL PUMP, RGB ROAD, ZOO ROAD, GUWAHATI, ASSAM - 781005

190. MITTAL AUTOZONE (A UNIT OF SBM AUTOMOBILES PVT LTD) (--01), NH-37, BELTOLA, NEAR HANUMAN KANTA, GUWAHATI - 781028

191. PALLAVI MOTORS PVT LTD (--02), DAG NO. 2201, PATTA NO. 237, VILLAGE – JYOTIKUCHI, MOUZA – BELTOLA, AK AZAD ROAD, GUWAHATI, DISTRICT – KAMRUP, ASSAM. - 781034

HOJAI

192. RAMLAL DURGADUTT MOTORS PVT LTD (--01), KHATIYAN NO.: 312/3F, HOJAI MAIN ROAD, NEAR UCO BANK, SHANKARDEVNAGAR, HOJAI, DISTRICT – NAGAON , ASSAM - 782435
PH :7002680534.

HOWLY

193. PODDAR CAR WORLD PVT LTD (--01), PATTA NO. 601, DAG NO. 1567, HOWLI TOWN, MOUZA GHILAJARI, DISTT BARBETA, ASSAM - 781316
PH :8085957586.

HOWRAGHAT

194. BAJRANG CAR WORLD (A UNIT OF MAA VAISHNAVI AUTOMOTIVE PVT LTD) (--01), HOWRAGHAT TOWN, KARBI ANGLONG, ASSAM - 782481 - 782481
PH :9864191169.

JAGIROAD

195. RAMLAL DURGADUTT MOTORS PVT LTD (--02), JAGIROAD,MORIGAON,NALAOW,ASSAM - 782410
PH :9365884355.

JORHAT

196. RAMLAL DURGADUTT MOTORS PVT LTD (--01), DAG NO. 7 & 8 OF P.P NO. 33, DAG O. 9 OF P.P NO. 61, DAG NO. 382 OF P.P NO. 206, VILLAGE - PAKIMURI HABIGAON, MOUZA - SARAIBAHAL, JORHAT. - 785006

197. JAINCO AUTOTECH PVT LTD (--01), AT ROAD, SEUNI ALI, JORHAT, ASSAM 785001 - 785001
PH :9287957451.

KALGACHIA

198. MITTAL AUTOZONE (A UNIT OF SBM AUTOMOBILES PVT LTD) (--01), VILL - KALGACHIA, PO - KALGACHIA , DIST BARPETA - 781319
PH :8638487401.

KALIABOR

199. RAMLAL DURGADUTT MOTORS PVT LTD (--01), MADHAB GAON,,
PO-KUWARITOL,PS.KALIABOR, - 782137

KAMPUR

200. RAMLAL DURGADUTT MOTORS PVT LTD (--01), VILL KAMPUR,PANCHINI JAR, PO KAMPUR , DIST NAGAON, PIN 782426 - 782426

KARIMGANJ

201. JAIN UDYOG (6901--04), STEAMER GHAT ROAD, KARIMGANJ, ASSAM - 788710
PH :9435179025.

KAYAKUCHI

202. MITTAL AUTOZONE (A UNIT OF SBM AUTOMOBILES PVT LTD) (--01), B.B ROAD, KAYAKUCHI, BARPETA, ASSAM - 781352

KHARUPATIA

203. BIMAL AUTO AGENCY (--01), VILL –BOLOGARAH, P.O – KHARUPETIA, P.S DHULA, DIST – DARRANG, ASSAM. - 784115

KHATKHATI

204. PODDAR CAR WORLD PVT LTD (--01), NEAR TELEPHONE EXCHANGE, NH-39, KHATKHATI, DISTRICT – KARBI ANGLONG . - 782460
PH :6000900381.

KOKRAJHAR

205. BHARATI MOTORS PVT LTD (--01), TITAGURI,AT-KOKRAJHAR, DIST-KOKRAJHAR - 783370

LANKA

206. RAMLAL DURGADUTT MOTORS PVT LTD (--01), DAG NO 95 OF PP NO 59, DAG NO 96 OF PP NO 26 & DAG NO 418 OF PP NO 73 KISAM LAKHIMPUR , MOUZA - LANKA, DIST - HOJAI , ASSAM. - 782442
PH :9707556868.

MAJULI

207. RAMLAL DURGADUTT MOTORS PVT LTD (--01), PETROL PUMP, NEAR GARMUR, GARMUR, MAJULI, JORHAT, ASSAM 785104 - 785104

MANGALDOI

208. PODDAR CAR WORLD PVT LTD (--01), PUNIA, NH-52, MANGALDOI, DISTT. DARRANG - 784115
PH :9706970132.

MARGHERITA

209. VISHAL CAR WORLD PVT LTD (--01), MARGERITA TOWN, BEHIND IOCL PETROL PUMP, NH-38, MARGHERITA, ASSAM - 786181
PH :9435860000.

MORIGAON

210. RAMLAL DURGADUTT MOTORS PVT LTD (--01), DAG NO. 423 OF PP NO. 221, KISSAM BACHNAGHAT, MORIGAON, ASSAM. - 782105
PH :7002239592.

NAGARBERA

211. PALLAVI MOTORS PVT LTD (--01), NAGARBERA,, DOKUCHI,KAMRUP, - 781127

NAGOAN

212. RAMLAL DURGADUTT MOTORS PVT LTD (--01), KHUTIKHATIA, HAIBARGON, NAGAON - 782002
PH :9706007918.

213. BAJRANG CAR WORLD (A UNIT OF MAA VAISHNAVI AUTOMOTIVE PVT LTD) (--01), DAG NO. 255, 1508(N)/254(O), 1509(N)/257(O) AND 291, PATTA NO. 506(N)/15(O), 507(N)/15(O), 507(N)/97(O) AND 98, VILLAGE - DEODHAR, MOUZA - PAKHIMORIA, DIST.-NAGAON. - 782002

214. RAMLAL DURGADUTT MOTORS PVT LTD (--03), PAKHIMURIA, NEAR BHUGDOI DHABA, NAGAON, ASSAM

215. BAJRANG CAR WORLD (A UNIT OF MAA VAISHNAVI AUTOMOTIVE PVT LTD) (--02), BAJRANG CAR WORLD
DIMORUGURI
OPPOSITE KAPILI NURSING HOME
DISTRICT NAGAON
STATE ASSAM - 782003

NAHARKATIYA

216. JAYBEE AUTO AGENCIES PVT LTD (--03), NAHARKATIYA TOWN PART NO. 4, MOUZA – JAYPORE, NEAR ST. MARY'S SCHOOL, DISTRICT – DIBRUGARH, ASSAM . - 786610
PH :7002722358.

NALBARI

217. BIMAL AUTO AGENCY (9201--01), CHOWKBAZAR, NALBARI HAJO ROAD, NALBARI DIST. NALBARI - 781335
PH :7576842484.

NARAYANPUR

218. SAIKIA AUTO PVT LTD (--01), WARD NO-2, P.O-DIKRONG BADULAHATI,NH-52, NARAYANPUR - 784164

NAZIRA

219. RAMLAL DURGADUTT MOTORS PVT LTD (--01), MAIN ROAD NAZIRA,, NEAR NRL PETROL PUMP,PO/PS NAZIRA, - 785685

NORTH LAKHIMPUR

220. SAIKIA AUTO PVT LTD (--01), HATILUNG, NH-52 ROAD, NORTH LAKHIMPUR, ASSAM - 787031
PH :8473946336.
221. SAIKIA AUTO PVT LTD (--03), KHELMATI, WARD NO. 14, NH -52, NORTH LAKHIMPUR, ASSAM - 787001
PH :7002571073.

PATHSALA

222. PODDAR CAR WORLD PVT LTD (--01), DAG NO. 451, PATTA NO. 151 KMP, PATHSALA, DIST. -BARPETA, ASSAM. - 781325
PH :6000900256.

RAHA

223. BAJRANG CAR WORLD (A UNIT OF MAA VAISHNAVI AUTOMOTIVE PVT. LTD.) (--01), RAHA TOWN, NH-37,, NEAR TOLL GATE, - 782103

RAJGARH

224. JAYBEE AUTO AGENCIES PVT LTD (--01), DAG NO.182, PP NO.140 OF 2 NO. BHAGATIA GAON, LAT NO.11, RAJGARH, MOUZA-TINKHONG, DISTT. DIBRUGARH, ASSAM - 786611
PH :9954799273.

RANGIA

225. PODDAR CAR WORLD PVT LTD (--01), RANGIA TOWN, WARD NO. 5, SHANTIPUR, BHUTAN ROAD, NEAR POLYCLINIC HOSPITAL, RANGIA DISTT. KAMRUP (ASSAM) - 781354
PH :8724877892.

SADIYA

226. VISHAL CAR WORLD PVT LTD (--01), 5 NO. SHANTIPUR, SADIYA, DIST. SADIYA, - 786155

SALBARI

227. MITTAL AUTOZONE (A UNIT OF SBM AUTOMOBILES PVT LTD) (--01), K.C COMPLEX, SALBARI, P.O. ANANDA BAZAR, DIST. BAKSA - 781318

SARUPATHAR

228. JAINCO AUTOTECH PVT LTD (--01), WARD NO 1, PADUMONI, SARUPATHER, GOLAGHAT - 785601

SIBSAGAR

229. RAMLAL DURGADUTT MOTORS PVT LTD (--02), RANGHAR CHARIALI, DHAPROTA, AT ROAD, OPPOSITE RANGHAR, SHIVASAGAR - 785640
230. RAMLAL DURGADUTT MOTORS PVT LTD (--01), NO.1,CHAULKARA GAON,UNDER KONWAR,DIST: SIVASGAR - 785640

SILCHAR

231. JAIN UDYOG (6901--02), KAUSHAL COMPLEX, SONAI ROAD, SILCHAR, ASSAM - 788006
PH :9706002524.

SIMLA

232. PODDAR CAR WORLD PVT LTD (--01), VILL: HAZUA NEW COLONY, PO- KOKLABARI, PS- SIMLA, DISTRICT- BAKSA, ASSAM - 781330

SONAPUR

233. PODDAR CAR WORLD PVT LTD (--03), NEAR LUMSUM,N.C,SONARPUR,ASSAM,782401 - 782401

SONARI

234. JAINCO AUTOTECH PVT LTD (--01), BORAHI CHARALI, WARD NO 12, SONARI, CHARAIDEO - 785690

SOOTEA

235. BAJRANG CAR WORLD (A UNIT OF MAA VAISHNAVI AUTOMOTIVE PVT LTD) (--01), BIGHA NO 2, KATHA 10, KHERAJ MIYADI, REVENUE CIRCLE NO DUAR, SOOTEA - 784175

SORBHOG

236. MITTAL AUTOZONE (A UNIT OF SBM AUTOMOBILES PVT LTD) (--01), VILLAGE DAHALAPARA, KISMAT DWARIKA, PS SORBHOG, SUB DIVISION- BARPETA- ASSAM. - 781317
PH :8011042222.

TANGLA

237. BIMAL AUTO AGENCY (--01), DAG NO.:121, PATTA NO.101/320, VILLAGE BULLARPARA, MOUZA TANGLA. - 784521
PH :9954387619.

TENGAGHAT

238. BIMAL AUTO AGENCY (--01), NEAR INDIAN OIL PETROL PUMP,, SH-23, TEHGAGHAT - 786103

TEZPUR

239. RAMLAL DURGADUTT MOTORS PVT LTD (--01), NEAR DON BASCO SCHOOL, P.O. NIKAMULSATRA, TEZPUR, ASSAM - 784154
240. RAMLAL DURGADUTT MOTORS PVT LTD (--02), GORAIMARI, VILLAGE - SOLGAON, TEZPUR, ASSAM. - 784001
PH :9836036157.

TINSUKIA

241. VISHAL CAR WORLD PVT LTD (--01), LAIPULY, A.T. ROAD, TINSUKIA, DIST - TINSUKIA, ASSAM - 786183
PH :9435860000.

TITABAR

242. JAINCO AUTOTECH PVT LTD (--01), PUBALI NAGAR, TITABOR - 785630

BIHAR

ARARIA

243. SEEMANCHAL MOTORS PVT LTD (--01), NEAR BUS STAND, JAGDISH RICE MILL COMPOUND, HOSPITAL ROAD, FORBESGANJ, DISTT. ARRARIA, BIHAR - 854318
PH :8797096013.

ARRAH

244. PEARL CARS (A UNIT OF VINDHYAVASINI AUTOMOBILES PVT LTD) (--01), (A UNIT OF VINDHYAVASINI AUTOMOBILES PVT. LTD.), DHANUPRA, NEAR GANPAT CHOUDHARY DWAR, NH-30, ARRAH (BIHAR) - 802301
PH :8294634604.

AURANGABAD

245. KARLO AUTOMOBILES PVT LTD (--01), KARLO AUTOMOBILES PVT LTD, GT ROAD, NEAR, RAIPURA MORE, BABHANDI, AURANGABAD - 824101
PH :7019085212.

BANKA

246. SEEMANCHAL MOTORS PVT LTD (--01), KHATA NO. 134, KHESRA NO. 118, BEHIND MARUTI SHOWROOM, STATION ROAD, BANKA, BIHAR. - 813101
PH :8797096020.

BEGUSARAI

247. GS MOTORS PVT LTD (--01), HARHAR MAHADEV CHOWK, NH 31, BEGUSARAI, BIHAR - 851101
PH :9204756206.

BETTIAH

248. SHREE GOPAL AUTO PVT LTD (--01), BEETIAH - MOTIHARI HIGHWAY , NH-28 B, NEAR MACHALI LOK, BEETIAH (BIHAR). - 845438
PH :9771486183.

BHAGALPUR

249. SEEMANCHAL MOTORS PVT LTD (--01), BAUSI ROAD, ALIGANJ, NEAR SAINT TRESA SCHOOL, ALIGANJ, BHAGALPUR. - 812005
PH :8797096020.

BHITA

250. REESHAV AUTOMOBILES PVT LTD (--01), PLOT NO 1674 & 1676, KHATA NO - 19 & 67 AT MOUZA - MAHADEOPUR PHULARI, P.O - BIHTA, P.S- BIHTA, DISTRICT - PATNA - 801103
PH :7763954585.

BIHARSHARIF

251. REESHAV AUTOMOBILES PVT LTD (--03), PATNA RANCHI ROAD, NR GAGAN DIWAN SOGARA SCHOOL, THANA-LAHERI MURARPUR, BIHARSHARIF, DISTRICT-NALANDA, BIHAR - 803101
PH :9263632175.

BUXAR

252. PEARL CARS (A UNIT OF VINDHYAVASINI AUTOMOBILES PVT LTD) (--01), C/O DEVDHTRHA UPPDHYYA, SYNDICATE, BYE PASS ROAD, BUXAR - 802101

CHAKIA

253. RAMKRISHNA MOTORS PVT LTD (--01), OJHA TOLA, NEW BYPASS, CHAKIA-845412, PURVI CHAMPARAN DISTT., BIHAR - 845412
PH :9801773716.

CHAPRA

254. REESHAV AUTOMOBILES PVT LTD (--02), 146, PLOT NO. 381, VILLAGE RAUJA, CHAPRA PATNA ROAD, NEAR BHIKHARI CHOWK, CHAPRA, BIHAR - 841301
PH :7061295296.

DANAPUR

255. ALANKAR AUTO SALES & SERVICE PVT LTD (1504--02), ADJASCENT ARYA SAMAJ MANDIR, NEAR SAGUNA MORE, DANAPUR, - 800018
PH :9386898458.
256. ALANKAR AUTO SALES & SERVICE PVT LTD (--05), TOUZI NO. 5057, THANA NO. 35, MOUZA - BABAKKARPUR, DANAPUR, PATNA. - 801503
PH :9334415434.

DARBHANGA

257. RAJKRISHNA MOTORS LLP (--01), KHATA NO.61936, RAUSHAN CHOWK, BAJITPUR, B.M.P. -13, ROAD, DARBHANGA, BIHAR - 846009
PH :7004529271.
258. RAJKRISHNA MOTORS LLP (--02), VIP ROAD, ALLALPATTI, DARBHANGA (BIHAR) - 846003
PH :9693127351.

DEHRI ON SON

259. PEARL CARS (A UNIT OF VINDHYAVASINI AUTOMOBILES PVT LTD) (--02), MOUZA - KHASRA, KHATA NO. 141, PLOT NO. 186, SAAT KATDA THANA - DEHRI-ONE-SONE, DIST. -ROHTAS, BIHAR. - 821307
PH :8294634602.

GAYA

260. KARLO AUTOMOBILES PVT LTD (--01), BODH GAYA, GAYA. - 824231
261. DMC CARS (A UNIT OF DHANRAAJ AGENCIES PVT LTD) (--01), DHANRAAJ AGENCIES PRIVATE LIMITED, MARUTI SUZUKI ARENA SHOWROOM, OPPOSITE AIRPORT RUNWAY, GAYA-DOBHI ROAD,GAYA, PIN 823004 - 823004

GOPALGANJ

262. SHREE GOPAL AUTO PVT LTD (--01), NH-28, DANAPUR, TEHSIL-MANJAGARH,GOPALGANJ (BIHAR) - 800023

HAJIPUR

263. REESHAV AUTOMOBILES PVT LTD (--01), KHATA 617 & KHASHRA 354/1605, NEAR RELIANCE PETROL PUMP, M G SETU ROAD, HAJIPUR (VAISHALI). - 844101
PH :9060945038.

JEHANABAD

264. DMC CARS (A UNIT OF DHANRAAJ AGENCIES PVT LTD) (--01), KHATA NO - 80, PLOT NO -1490, MOUZA - MUTHER, PS- JEHANBAD, DIST - JEHANABAD. - 804408

KATIHAR

265. SEEMANCHAL MOTORS PVT LTD (--01), NEAR SBP VIDIYA VIHAR SCHOOL, SIRSA, KATIHAR PURNEA ROAD, KATIHAR - 854105
PH :7762893700.

KISHANGANJ

266. SEEMANCHAL MOTORS PVT LTD (--01), PASCHIM PALI ROAD, COLLEGE ROAD, THANA:KNE, WARD NO.1, KISHANGANJ (BIHAR). - 855101
PH :8797096019.

LAKHISARAI

267. GS MOTORS PVT LTD (--01), TAUZI NO. 39, KHATA NO. 3, KHESRA NO. 496, MOUZA - JAINAGAR, ANCHAL - LAKHISARAI, DIST. -LAKHISARAI, BIHAR. - 811311
PH :9204756206.

MADHUBANI

268. RAJKRISHNA MOTORS LLP (--01), BHOWRA TOLA, BARDIBAN, MADHUBANI, BIHAR - 847211

MAHUA

269. REESHAV AUTOMOBILES PVT LTD (--01), MUZAFFARPUR-MAHUA ROAD,RASALPUR,HP PETROL PUMP, MADHAUL,MAHUA,VAISHALI,NEAR AKSHYAWAT COLLEGE - 844122

MOHANIA

270. PEARL CARS (A UNIT OF VINDHYAVASINI AUTOMOBILES PVT LTD) (--01), MOHANIA-BUXAR ROAD ,SH-14,MOHANIA - 821109

MOTIHARI

271. RAJIV AUTOMOBILES PVT LTD (--03), NEAR CHHATAUNI CHOWK, BESIDE NH 28 A, MOTIHARI TOWN , BIHAR - 845401
PH :9234609669.

MUZAFFARPUR

272. RAJIV AUTOMOBILES PVT LTD (--01), RAMDAYALU NAGAR, PATNA HAZIPUR ROAD, MUZAFFARPUR, BIHAR - 842002
PH :9910347908.

273. RAMKRISHNA MOTORS PVT LTD (--01), KRISHNA TALKIES CAMPUS, AKHARAGHAT ROAD, MUZAFFARPUR, BIHAR. - 842001

274. RAJIV AUTOMOBILES PVT LTD (--04), KHABRA POKHAR LANE NO -1, PANCHAYAT -KHABRA, CITY- MUZAFFARPUR - 843146
PH :9234609671.

NAUGACHIA

275. SEEMANCHAL MOTORS PVT LTD (--01), NEAR GAYATRI PLY ROOM, NH-31, NAUGACHIA MARKET, NAUGACHIA, DISTRICT – BHAGALPUR, BIHAR. - 853204

NAWADA

276. REESHAV AUTOMOBILES PVT LTD (--04), 191 & 400, KHSARA NO. 3105 & 3102, NEAR DM'S OFFICE, PATNA-RANCHI MAIN ROAD, NAWADA, BIHAR - 805110
PH :6206162228.

PATNA

277. KARLO AUTOMOBILES PVT LTD (1502-15-04), NEAR BATA GUNJ, DINGA PATNA, BIHAR. - 800013

278. ALANKAR AUTO SALES & SERVICE PVT LTD (1504--03), PLOT NO.118-119, BEHIND DURGA MARINE DRIVE APARTMENTS, DUJRA DEVI STHAN, ASHOK RAJPATH, PATNA - 800001
PH :9934020200.

279. REESHAV AUTOMOBILES PVT LTD (1506-15-01), PLOT NO.25/1581 KHATA NO.494, MOUZA KUMHRAR, PARGANA AZEEMABAD, KANKARBAGH, PATNA. - 800004
PH :7632995356.

280. KARLO AUTOMOBILES PVT LTD (1502--05), JAGDEOPATH , NEAR SAI CORPORATE PARK, PATNA - 801506
PH :9264190675.

281. ALANKAR AUTO SALES & SERVICE PVT LTD (1504-15-06), ALANKAR COMPOUND, BESIDE ALANKAR SUN CITY, SANDALPUR, KUMHRAR, PATNA – 800006 - 800006
PH :9304403916.

282. ALANKAR AUTO SALES & SERVICE PVT LTD (-15-07), BASUDEV SADAN CAMPUS,SANDALPUR,PATNA - 800006

283. SHREE GOPAL AUTO PVT LTD (1507-15-01), KHAGAUL ROAD, OPP. KOTAK MAHINDRA BANK, DANAPUR, PATNA - 801503

284. HORIZON AUTOMOBILE PRIVATE LIMITED (1508-15-01), DHAWALPURA NAGAR,MAULI ROAD,, PS-CHOWK,NEAR MURGI DANA FACTORY, - 800001

PURNEA

285. SEEMANCHAL MOTORS PVT LTD (--01), NH-31, NEAR MARKETING YARD, GULAB BAGH, PURNEA (BIHAR) - 854326
PH :8797096014.

RAXAUL

286. RAMKRISHNA MOTORS PVT LTD (--01), KAWRIHAR, TOLA - LAXAMIPUR, THANA NO -9, TAUJI NO - 951, THNANA AND ANCHAL - RAXAUL, DIST - EAST CHAMPARAN , BIHAR. - 845305

ROSERA

287. RAJKRISHNA MOTORS LLP (--01), NAND CHOWK,JAIL ROAD, , WARD NO.17,ROSERA, BIHAR - 848210

SAHARSA

288. GS MOTORS PVT LTD (--02), PATUAHA, NH 107 SAHARSA,BIHAR - 852201
PH :9263638456.

SAMASTIPUR

289. RAJKRISHNA MOTORS LLP (--01), KHESRA NO. 3190-95, KHATA NO. 76, HERPUR ALLOTH, SAMASTIPUR, BIHAR. - 848101
PH :9204552405.

SASARAM

290. PEARL CARS (A UNIT OF VINDHYAVASINI AUTOMOBILES PVT LTD) (--01), PLOT NO.7, 9 & 11, NH-2 MORE SARAI, SASARAM (BIHAR) - 821115

SITAMARHI

291. RAJIV AUTOMOBILES PVT LTD (--01), DUMRA ROAD, SHANTI NAGAR, SITAMARHI. - 843301

SIWAN

292. SHREE GOPAL AUTO PVT LTD (--01), CHAPRA ROAD, NEAR CHAPDHALA, NH 85, SIWAN - 841236
PH :9771486132.

SUPAUL

293. GS MOTORS PVT LTD (--01), SISAUNI, ROAD, KISHANPUR WEST, BIHAR 852138 - 852138

CHANDIGARH

CHANDIGARH

294. MODERN AUTOMOBILES (--01), 4 M.W. INDL AREA, CHANDIGARH - 160002

295. AUTOPACE NETWORK PVT LTD (--01), PLOT #112-113, INDUSTRIAL AREA, PHASE-1, CHANDIGARH - 160002

296. TRICITY AUTOS (--02), PLOT NO 89, PHASE-1 INDUSTRIAL AREA, CHANDIGARH - 160002
PH :9988882335.

297. NAVDESH AUTOS LLP (--01), PLOT NO. 42, INDUSTRIAL AREA PHASE-1, CHANDIGARH. - 160002

CHHATTISGARH

AKALTARA

298. M SQUARE MOTORS (A UNIT OF MAHAVIR MOTORCORP PRIVATE LIMITED) (--01), SHOP NO 4,5,6,7 & 8, SHRI NARAYAN COMPLEX & GODOWN, NEAR INDRA UDYAN,SHEORINARAYAN ROAD,AKALTARA-495552, CHHATTISGARH - 495552
PH :7987590484.

AMBAGARH CHOWKI

299. SPARSH AUTOMOBILES PVT LTD (--01), WARD NO.1, MOHALLA MANPUR BEHIND CRGB BANK,AMBAGARH CHOWKI, CHHATTISGARH - 491661

AMBIKAPUR

300. MAHAMAYA AUTOCARS PVT LTD (--01), MANEDRAGARH ROAD, AMBIKAPUR, CHATTISGARH. - 497001
PH :7987741432.

ARANG

301. VISHWABHARTI AUTOMOBILES PRIVATE LIMITED (--01), MAIN ROAD, IN FRONT OF BLOCK OFFICE, ARANG, CHHATTISGARH - 493441

BAGBAHARA

302. HDN MOTORS PVT LTD (--01), M/S HDN MOTORS, BESIDE R.N RICE MILL, NEW MAHAVEER COMPLEX, MAHASAMUND ROAD, BAGBAHARA - 493449
PH :7909800004.

BAIKUNTHPUR

303. MAHAMAYA AUTOCARS PVT LTD (--01), WARD NO.01, KHATA NO.91/6, TEHSIL - BAIKUNTHPUR, DISTT. - KORIYA, CHATTISGARH - 497335

BALOD

304. CHOUHAN AUTOMOBILES LLP (--01), H.NO 185, WARD NO 25, NAYA MARKET, DALLIRAJHARA, BALOD -491228 - 491228
PH :9837325267.

BALODA BAZAAR

305. SKY AUTOMOBILES (5001--04), AMBEDKAR CHOWK, RAIPUR ROAD, BALODA BAZAAR, CHATTISGARH. - 493332

BALRAMPUR

306. MAHAMAYA AUTOCARS PVT LTD (--01), NEAR REST HOUSE,, RAMANUJGANJ ROAD,BHANORA, - 497119

BASNA

307. VISHWABHARTI AUTOMOBILES PRIVATE LIMITED (--01), M/S VISHWABHARTHI AUTO, PADAMPUR ROAD, BASNOUL, BASNA,CHHATTISGARH - 493554
PH :6262620060.

BEMETRA

308. CHOUHAN AUTOMOBILES LLP (--01), KHASRA NO. 88/2, CHOUHAN AUTOMOBILE LLP, KAWARDHA ROAD, NAVGHAD CHOWK, BEMTARA CHATTISGARH - 491335
PH :6262000222.

BHATAPARA

309. SPARSH AUTOMOBILES PVT LTD (--01), RAIPUR ROAD, BHATAPARA (CHATTISGARH) - 493118

BHILAI

310. CHOUHAN AUTOMOBILES LLP (8305--01), PLOT NO.1 & 34, SHIVNATH COMPLEX, BEHIND CHOUHAN ESTATE, G.E. ROAD, SUPELA, BHILAI. - 490023
311. SPARSH AUTOMOBILES PVT LTD (--01), R-17, INDUSTRAIL AREA, NANDNI ROAD, CHHAWANI CHOWK, BHILAI, CHHATTISGARH - 490026
312. CHOUHAN AUTOMOBILES LLP (8305--02), NH-6, DURG BYPASS ROAD, KHASRA NO.1/14, 1/23, 1/192, VILLAGE-KATULBOD, BHILAI, TEHSIL & DISTT. DURG, BHILAI, CHHATTISGARH - 491001
313. SPARSH AUTOMOBILES PVT LTD (8304-83-02), M/S. SPARSH AUTO,VEERSAVARKAR MARKET, G.E ROAD, SUPELA,BHILLAI-490023 - 490023
PH :9926626662.

BHUBAN

314. SKY AUTOMOBILES (--01), NH-53, BYPASS ROAD,, BHUBAN, DHENKANAL, - 759017

BILASPUR-CG

315. SATYA AUTO PRIVATE LIMITED (--01), SECTOR C, PLOT NO. 42, SIRGITTI INDUSTRIAL AREA, BILASPUR, CHATTISGARH - 495001
316. SATYA AUTO PRIVATE LIMITED (--02), PLOT NO. 848/20, 848/26, 848/40, MOPKA BYPASS ROAD, BILASPUR, CHHATTISGARH. - 495006
PH :9977879698.
317. M SQUARE MOTORS (A UNIT OF MAHAVIR MOTORCORP PRIVATE LIMITED) (--01), KHASRA NO. 420 AND 414/1, NEAR RELIANCE PETROLEUM PUMP, BESIDES TRANSPORT NAGAR GATE, RAIPUR ROAD, PARSADA, BILASPUR. - 495223
PH :6262622560.
318. SATYA AUTO PRIVATE LIMITED (--03), WARD NO.1, BESIDES HERO SHOWROOM, MUNGELI ROAD, SAKRI, BILASPUR - 495001

CHARODA

319. SPARSH AUTOMOBILES PVT LTD (--01), NH-6, OPP. RAIL NAGAR, CHARODA, BHILAI

CHHURIYA

320. SPARSH AUTOMOBILES PVT LTD (--01), NEAR CHURIYKALA BUS STAND ROAD, CHURIYA - 491558

DALLIRAJHARA

321. CHOUHAN AUTOMOBILES LLP (--01), H.NO 185, WARD NO 25, NAYA MARKET,DALLIRAJHARA,BALOD DISTRICT-491228 - 491228
PH :6262000222.

DANTEWADA

322. SKY AUTOMOBILES (--01), PATAR RAS MAIN ROAD,DANTEWADA,PIN-494440, - 494440

DEOBHOG

323. SPARSH AUTOMOBILES PVT LTD (--01), M/S SPARSH AUTOMOBILES PVT LTD SANTOSHI NAGAR,NEAR BHARAT PETROL PUMP, DHARAMGARH ROAD, DEOBHOG – 493890 - 493890
PH :9926626662.

DHAMTARI

324. SKY AUTOMOBILES (--01), KASRA NO.238/2, SEHARA DABRI, RAIPUR ROAD, DHAMTARI-493773 CHATTISGARH - 492009
PH :8889998612.

DIPKA

325. M SQUARE MOTORS (A UNIT OF MAHAVIR MOTORCORP PRIVATE LIMITED) (--01), NEAR GOVT COLLEGE ,JHABAR ROAD,DIPKA ,KOBA ,CHHATISGARH - 495452

DONGARGARH

326. SPARSH AUTOMOBILES PVT LTD (--01), M/S SPARSH AUTOMOBILES, ADARSH NAGAR, NEARTHANA CHOWK, DONGARGARH, DT:RAJNANDGAON, CHHATTISGARH - 491445 - 491445

DURG

327. SPARSH AUTOMOBILES PVT LTD (--01), OPP. JAINAM PLACE, BEFORE PULGAON CHOWK, PULGAON NAKA, DURG, CHHATTISGARH - 491001
328. SPARSH AUTOMOBILES PVT LTD (--02), MINI MATA CHOWK, PULGAON - 491001

GARIYABANDH

329. SPARSH AUTOMOBILES PVT LTD (--01), NEAR HP PETROL PUMP, RAIPUR ROAD, GARIYABAND, CHHATTISGARH. - 756032

GHARGHODA

330. M SQUARE MOTORS (A UNIT OF MAHAVIR MOTORCORP PRIVATE LIMITED) (--01), M/S M SQAURE,VILLAGE BHENGARI, NAVAPARA-TENDA,GHARGHODA,DISTRICT – RAIGARH CHHATTISGARH. PIN CODE: 496111 - 496111
PH :7987690484.

JAGDALPUR

331. SKY AUTOMOBILES (--01), GEEDAM ROAD, JAGDALPUR, CHATTISGARH. - 494001

JANJGIR

332. SATYA AUTO PRIVATE LIMITED (--01), NEAR KHOKSHA RAILWAY CROSSING, CHAMPA ROAD, NH-200, JANJGIR - 495668

KANKER

333. SKY AUTOMOBILES (5001--06), RAZA NAGAR, SINGARBHAT, NH-30, KANKER , DISTRICT – KANKER, CHHATTISGARH - 494334

KATGHORA

334. SATYA AUTO PRIVATE LIMITED (--01), BILASPUR RD. KATGHORA, KORBA, CHATTISGARH - 495445

KAWARDHA

335. CHOUHAN AUTOMOBILES LLP (--01), KHASRA NO. 100/6, TALPUR BILASPUR ROAD, KAWARDHA, CHHATTISGARH. - 491995

KHAIRAGARH

336. SPARSH AUTOMOBILES PVT LTD (--01), KHAIRAGARH -JHALBANDHA ROAD,AMLIPARA, OPP - BIJALI OFFICE, KHAIRAGARH -491881 - 491881
PH :9926626662.

KHARSIA

337. SATYA AUTO PRIVATE LIMITED (--01), M/S SATYA AUTO , BESIDE GOVT HIGH SCHOOL, RANISAGAR, KHARSIA, DISTRICT: RAIGARH, CHHATTISGARH - 496661
PH :9993092051.

KONDAGAON

338. SKY AUTOMOBILES (--01), – M/S SKY AUTO, NH-90 RAIPUR ROAD, NEAR INDIAN OIL PETROL PUMP, KONDAGOAN, CHHATTISGARH - 494226
PH :9425204051.

KORBA

339. SATYA AUTO PRIVATE LIMITED (--01), SHED NO. 1, INDUSTRIAL AREA, KORBA - 495681

KURUD

340. HDN MOTORS PVT LTD (--01), KHASRA NO 601/9 & 601/10, DHAMTARI-RAIPUR ROAD, KURUD, CHHATTISGARH - 493663
PH :7909800004.

LORMI

341. M SQUARE MOTORS (A UNIT OF MAHAVIR MOTORCORP PRIVATE LIMITED) (--01), KHASRA NO 273/6, MAHAMAYA MARG, LORMI, DIST-MUNGELI, CHHATTISGARH - 495115

MAGARLOD

342. SKY AUTOMOBILES (--01), WARD NO:14, SWANI VIVEKANAND WARD, PANDUKA ROAD, MATHURA NAGAR, MAGARLOAD, DIST-DHAMTARI, CHATTISGARH - 493662

MAHASAMUND

343. SPARSH AUTOMOBILES PVT LTD (5002--02), BARONDA CHOWNK, BAGBAHRA ROAD, MAHASAMUND. - 493445

MANENDRAGARH

344. MAHAMAYA AUTOCARS PVT LTD (--02), WARD NO.21, NH-43, AMBIKAPUR ROAD, NEAR HP PETROL PUMP, MANENDRAGARH, DISTT. KORIYA - 497442

MUNGELI

345. SATYA AUTO PRIVATE LIMITED (--01), KHASRA NO. 270/2, BILASPUR ROAD, MUNGELI, CHHATTISGARH - 861468

PANDARIYA

346. CHOUHAN AUTOMOBILES LLP (--01), KHASRA NO. 24,7, KAWARDHA ROAD, NEAR INDIAN OIL, PANDARIYA, SINGARPUR, CHHATTISGARH - 491559

PATHALGAON

347. MAHAMAYA AUTOCARS PVT LTD (--01), KHASRA NO. 567/2, PHATALGAON, DISTRICT – JASPUR, CHHATTISGARH. - 496118

PENDRA

348. M SQUARE MOTORS (A UNIT OF MAHAVIR MOTORCORP PRIVATE LIMITED) (--01), – M SQUARE MOTORS, NEAR SEMRA CLOCK MAIN ROAD, PENDRA,GOURELA PENDRA MARWAHI-495119 - 495119
PH :7987590484.

PITHORA

349. SPARSH AUTOMOBILES PVT LTD (--01), PLOT NO. 284/1, RAMSAGAR PARA, RAIPUR ROAD, PITHORA, CHHATTISGARH. - 761008

RAIPUR

350. SKY AUTOMOBILES (5001-50-01), G.E.ROAD, MOHABA BAZAR, RAIPUR. - 492010
351. SKY AUTOMOBILES (5001-50-02), K.K. ROAD, MOUDHAPARA, RAIPUR. - 492001
PH :9584460290.
352. SPARSH AUTOMOBILES PVT LTD (5002-50-01), PACHPADI NAKA, OPP. DUTTA DRY CLEANER, DHAMKARI, JAGDALPUR ROAD, RAIPUR. - 492001
353. SKY AUTOMOBILES (5001-50-05), NEAR R.K. MALL, KOTA ROAD, RAIPUR - 492001
PH :9893000161.
354. SKY AUTOMOBILES (5003-50-01), AVANTIVIHAR ROAD, TELEBANDHA, RAIPUR (C.G) - 492006
PH :9522314155.
355. SPARSH AUTOMOBILES PVT LTD (--04), OPP. UNION BANK, MAIN ROAD, PANDRI, RAIPUR - 492004
356. SPARSH AUTOMOBILES PVT LTD (5002-50-05), PLOT - 31, INDUSTRIAL ESTATE, OPP MAHESH COLD STORAGE, BHANPURI, RAIPUR - 494224

357. SKY AUTOMOBILES (5001--07), ADJOINING WALLFORT CITY, BHATGAON, RING ROAD NO. 2, RAIPUR, CHHATTISGARH. - 492013
358. HDN MOTORS PVT LTD (5005-50-01), BESIDES BHARAT BENZ SHOWROOM, DURG-BHILAI ROAD, TATIBANDH, RAIPUR, CHHATTISGARH. - 492001
359. VISHWABHARTI AUTOMOBILES PRIVATE LIMITED (5004-50-01), VIDHAN SABHA ROAD, MOWA, RAIPUR DISTT. CHHATTISGARH - 492005

RAJGARH

360. SATYA AUTO PRIVATE LIMITED (--01), JINDAL ROAD, RAIGARH - 496001

RAJIM

361. SPARSH AUTOMOBILES PVT LTD (5002--03), RAIPUR ROAD, NEAR AMMANI PETROL PUMP, NAYAPARA, RAJIM. - 493881

RAJNANDGAON

362. SPARSH AUTOMOBILES PVT LTD (--01), NEAR HANUMAN TEMPLE, VILL-MANKI , NH-6, RAJNANDGAON, CHHATTISGARH - 491441

SAKTI

363. SATYA AUTO PRIVATE LIMITED (--01), NH-49, NANDAUR KHURD, MALDI, DIST. SAKTI, PIN-495689, CHHATTISGARH - 495689

SARAIPALLI

364. SKY AUTOMOBILES (--01), KHASRA NO.482/5 AND 482/6, RAIPUR ROAD, SARAIPALI, DIST-MASAMUND, SARAIPALI - 493558

SARANGARH

365. SATYA AUTO PRIVATE LIMITED (--01), KASRA NO. 71/4, 73/2, 74/2, 75/1 AND 76/2, SARANGARH BIKAS KHAND, SARANGARH, DISTT. RAIGARH. - 733751

SHIVIRNARAYAN

366. SATYA AUTO PRIVATE LIMITED (--01), M/S SATYA AUTO,DEORI, SHIVRINARAYA, JANJGIR – CHAMPA, CHATTISGARH - PIN 495556 - 495556 PH :9993092051.

SIMGA

367. HDN MOTORS PVT LTD (--01), PLOT NO 2, WARD NUMBER 05, SHANKAR NAGAR, SIMGA, BALODA BAZAR, CHHATTISGARH - 493101 PH :9826686000.

SURAJPUR

368. MAHAMAYA AUTOCARS PVT LTD (--01), NEARNMAHINDRA SHOWROOM ,CHANDAPUR ,CHATTISGARH - 497229

TILDA

369. SKY AUTOMOBILES (--01), KASRA NO. 29/31, TILDA, DIST.-RAIPUR, CHHATTISGARH. - 493114 PH :9425204051.

DADRA AND NAGAR HAVELI

SILVASSA

370. KATARIA AUTOMOBILES PRIVATE LIMITED (--01), NEAR ATHAL CHAR RASTA,DADAR & NAGAR HAVELI, SILVASSA - 396230 PH :9723816223.

DAMAN AND DIU

DAMAN

371. KATARIA AUTOMOBILES PRIVATE LIMITED (--11), NEAR AKASWANI CENTER, RINGANWADA, NANI DAMAN , DAMAN UNION TERRITORY - 396210

DELHI

DELHI

372. SAYA AUTOMOBILES LTD (--03), A 21-22, G.T.KARNAL ROAD, NEW DELHI - 110033
373. D.D. MOTORS (A DIVISION OF D.D. PREM PVT LTD) (--01), A-100 MAYAPURI,PHASE-II,NEW DELHI - 110064
374. COMPETENT AUTOMOBILES CO LTD (--03), PLOT NO.3,GAZIPUR,DELHI, - 110096
375. T R SAWHNEY MOTORS PVT LTD (--01), 33 & 34, HARICHAND MELARAM COMPLEX, EAST GOKULPUR, WAZIRABAD ROAD, DELHI - 110094
376. RANA MOTORS PVT LTD (--02), C-47,OKHLA INDUSTRIAL AREA,PHASE-II,NEW DELHI - 110020
377. T R SAWHNEY MOTORS PVT LTD (--02), B-6 INDUSTRIAL AREA, PHASE I, OPP SECTOR 18, BADLI, NEW DELHI - 110042
378. D.D. MOTORS (A DIVISION OF D.D. PREM PVT LTD) (--01), 5, WAZIRPUR,INDUSTRIAL AREA,ADJACENT TO WAZIRPUR DEPOT,RING ROAD, NEW DELHI - 110034
379. ROHAN MOTORS LTD (--01), F-9/B-1, MOHAN COOPERATIVE INDUSTRIAL ESTATE, MATHURA ROAD, DELHI - 110044
380. MAGIC AUTO PVT LTD (--01), A-93,PHASE-2,MAYAPURI INDL AREA,DELHI - 110064
381. PREM MOTORS PVT LTD (--01), KHASRA NO. 544/1, MUNDKA, NEW DELHI - 110041
382. T R SAWHNEY MOTORS PVT LTD (--04), PLOT NO.-508, FUNCTIONAL INDUSTRIAL ESTATE, PATPARGANJ - 110092
383. MAGIC AUTO PVT LTD (--01), PLOT NO. 68/3,MOTINAGAR,NEW DELHI, - 110015
384. SAYA AUTOMOBILES LTD (--2B), KHASRA NO.2,G.T. KARNAL ROAD,OPP. GURUDUARA HARGOVIND SINGH,SIRAS PUR BADLI,DELHI - 110033
385. COMPETENT AUTOMOBILES CO LTD (--06), 14, SHIVAJI MARG, NAGAFGARH ROAD, NEW DELHI - 110015
386. RANA MOTORS PVT LTD (--04), B-6/6, OKHLA INDUSTRIAL AREA PHASE-II, NEW DELHI - 110020
387. PREM MOTORS PVT LTD (--01), KH. NO.804/2,MAHIPALPUR MATA CHOWK, DELHI - 110037
388. AAA VEHICLEADES PRIVATE LIMITED (--03), VILLAGE GHEVRA, KHASRA NO.87/3, 87/8 & 87/13/1, DELHI-ROHTAK ROAD, METRO PILLAR NO.616, MUNDKA, NEW DELHI - 110041 PH :9717092903.
389. RANA MOTORS PVT LTD (--05), A-8, RAJASTHANI UDYOG NAGAR, NEAR AZADPUR FRUIT MARKET, G.T. KARNAL ROAD, OPP. METRO PILLAR NO.119, DELHI. - 110033
390. T R SAWHNEY MOTORS PVT LTD (--01), B-19, MAYAPURI INDUSTRIAL AREA, PHASE-1, NEW DELHI. - 110064
391. D.D. MOTORS (A DIVISION OF D.D. PREM PVT LTD) (--02), 9/55 KIRTI NAGAR, INDUSTRIAL AREA, NEW DELHI - 110015
392. MAGIC AUTO PVT LTD (--01), PLOT NO. 449 & 450, PATPARGANJ INDUSTRIAL AREA, NEW DELHI. - 110092
393. DD MOTORS (A DIVISION OF D.D. MOTORS MOBILITY) (--03), 85B RANAJI ENCLAVE, NAGLI SAKRAWATI, NAJAFGARH, NEW DELHI. - 110043
394. PREM MOTORS PVT LTD (--01), 36/22/2 AND 36/19, PANA UDHYAN, NARELA, NEW DELHI. - 110040
395. DD MOTORS(A DIVISION OF D.D. MOTORS MOBILITY (--01), 32/19, MATIALA, BEHIND DELHI PUBLIC SCHOOL, SECTOR-3, DWARKA, NEW DELHI. - 110059
396. FAIR DEAL WHEELS PVT LTD (--01), PLOT NO.25, KHATA KHATAUNI NO.97/98, KHASRA NO.48/17, OPP. BRAHMSHAKTI HOSPITAL, BUDH VIHAR, POOTH KALAN, MAIN KANJHAWALA ROAD, DELHI - 110086 PH :8448690737.
397. COMPETENT AUTOMOBILES CO LTD (--07), 23/2, MATIALA PHIRNI, POCKET C, SECTOR 3, DWARKA, DELHI. - 110059
398. AAA VEHICLEADES PRIVATE LIMITED (--01), B243, OKHLA PHASE-1, OKHLA, DELHI - 110020 PH :8448582912.
399. D.D. MOTORS (A DIVISION OF D.D. PREM PVT LTD) (--05), A-90, WAZIRPUR INDUSTRIAL AREA, NEW DELHI-110052 - 110052 PH :9310367233.
400. JAGMOHAN AUTOMOTIVES PVT LTD (--01), PLOT NO. 69/2, WAZIRPUR INDUSTRIAL AREA, NEW DELHI, PIN-110052 - 110052 PH :9650790351.
401. RANA MOTORS PVT LTD (--08), B-83, GTK ROAD INDUSTRIAL AREA, DELHI. - 110033 PH :9289496300.
402. SHREYASH AUTOMOTIVES PVT LTD (--01), PLOT NO.2, SSI INDUSTRIAL ESTATE, GT KARNAL ROAD, NEW DELHI. - 110063 PH :43288888.
403. SHREYASH AUTOMOTIVES PVT LTD (--02), A-3, WAZIRPUR INDUSTRIAL AREA, DELHI. - 110052
404. VIPUL MOTORS PVT LTD (--01), B-26, JHILMIL INDUSTRIAL AREA, DELHI -110095 - 110095 PH :9811233385.
405. COMPETENT AUTOMOBILES CO LTD (--08), 43/12, NAJAFGARH BAHDURGARH ROAD, NEW ANAJ MANDI, NEAR JAAT BHAWAN, NAJAFGARH, PIN-110043, DELHI - 110043
406. PREM MOTORS PVT LTD (--02), GROUND FLOOR, PLOT NO. C-7, SMA CO-OPERATIVE INDUSTRIAL AREA, GTK ROAD, AZADPUR, PIN-110033, DELHI - 110033
407. SINGLA LINK AGENCY PVT LTD. (--01), 395 PATPAR GANJ INDL. AREA,PATPARGANJ,NEW DELHI - 110092
408. JAGMOHAN AUTOMOTIVES PVT LTD (--02), KH. NO. 26/3/4/7/8 REVENUE ESTATE NANGLI SAKRAWATI INDUSTRIAL AREA, DELHI-110043. - 110043
409. AAA VEHICLEADES PRIVATE LIMITED (--02), KH. NO.-32-33 VILLAGE SHAHOORPUR, SATBARI, NEAR FATEHPUR BERI, IN-FRONT SKY-MANSION TOWER, CHATTARPUR, PIN-110074, DELHI - 110074
410. FAIR DEAL WHEELS PVT LTD (--01), F-13, CHAND BAGH, MAIN WAZIRABAD ROAD, BHAJANPURA DELHI - 110053
411. SINGLA LINK AGENCY PVT LTD. (--02), E-26, B1 EXTENSION, MOHAN COOPERATIVE INDUSTRIAL AREA, MATHURA ROAD, NEW DELHI – 110044 - 110091

GOA

BICHOLIM

412. SAI SERVICE PRIVATE LIMITED (--01), CITY SURVEY NO. 46/1, MUSLIM WADDO, BICHOLIM, GOA - 403529

CANACONA

413. CHOWGULE INDUSTRIES PRIVATE LIMITED (--01), PLOT NO.40, CANCONA INDUSTRIAL ESTATE, SHREESTAL, CANCONA, SOUTH GOA - 403702

CUNCOLIM

414. SAI SERVICE PRIVATE LIMITED (3402--06), SURVEY NO.64/7, SHOP NO.3-A-II, CANCNAMODDI, CUNCOLIM, SOUTH GOA - 403703

DHARBANDORA

415. CHOWGULE INDUSTRIES PRIVATE LIMITED (3408--07), AT- KHANDEPAR- USGAON, TAL-DHARBANDORA, SOUTH GOA - 403401

GOA

416. SAI SERVICE PRIVATE LIMITED (3402--03), OFF PANJIM HIGHWAY,PONDA,GOA, - 403401

MAPUSA

417. SAI SERVICE PRIVATE LIMITED (3402--05), D-2/9,MAPUSA INDUSTRIAL ESTATE,MAPUSA, GOA, - 403507
418. CHOWGULE INDUSTRIES PRIVATE LIMITED (3408--03), PLOT NO. 19/20,THIVIM INDUSTRIAL ESTATE,KARASWADA, MAPUSA,GOA - 403507

MARGAO

419. CHOWGULE INDUSTRIES PRIVATE LIMITED (3408--01), OPP.DAMODAR TEMPLE,FATORDA,MARGOA,GOA - 403602
420. SAI POINT CARS PVT LTD (3409--01), H.NO.17,WARD NO.5,SURVEY NO.34/3,34/4,MARGAON PONDA HIGHWAY,SONFATOR AMBORA,CAMURLIN,SALCETE ,GOA - 403722
421. SAI SERVICE PRIVATE LIMITED (3402--02), SURVEY NO. 212/4,VILLAGE - VERNA,TAL : SALCETE ,NEXT TO AGNEL POLYTECHNIC, MARGAO - 403718
422. CHOWGULE INDUSTRIES PRIVATE LIMITED (3408--08), PLOT NO. M-58 AND M-59, PHASE 3B, VERNA INDUSTRIAL ESTATE, MARGAO, VERNA, SALCETE SOUTH GOA, GOA - 403722

PANAJI

423. SAI SERVICE PRIVATE LIMITED (3402--01), SURVEY NO: 36/1,PENHA DE FRANCE,TAL : BARDEZ, ALTO PCRVORIM,GOA - 403501
424. CHOWGULE INDUSTRIES PRIVATE LIMITED (3408--02), D.B BANDODKAR MARG,CAMPAL,PANAJI,GOA - 403001
425. SAI SERVICE PRIVATE LIMITED (3402--07), SHED NO.18/329, PLOT NO.5A, SURVEY NO.117/6, TELEIGAON, ST. INEZ, PANJIM, GOA-403 002. - 403001

PERNEM

426. CHOWGULE INDUSTRIES PRIVATE LIMITED (--01), SURVEY NO. 258/1-B & 258/1-C, OPPOSITE INDUTRIAL TRAINING INSTITUTE, TALUKA - PERNEM, DIST.-NORTH GOA. - 403512
PH :8380082893.

SANVORDEM

427. CHOWGULE INDUSTRIES PRIVATE LIMITED (--01), SURVEY NO. 4, SUBDIVISION-3, VILLAGE – CACORA, TALUKA – CURCHOREM, SANVORDEM, DIST. – SOUTH GOA, GOA . - 403706
PH :9850477607.

SATTARI

428. CHOWGULE INDUSTRIES PRIVATE LIMITED (3408--10), SURVEY NO. 60, SUB DIV NO. 05, VILLAGE ARVALEM, VILLAGE PANCHAYAT ARVALEM, TALUKA SATTARI, NORTH GOA, GOA - 403505
PH :9923464422.

TALEIGAO

429. CHOWGULE INDUSTRIES PRIVATE LIMITED (3408--06), SURVEY NO. 122, MAHBOS, NEAR SHANKARWADI TEMPLE, SHANKARWADI, TALEIGAON, - 403001

VASCO

430. SAI SERVICE PRIVATE LIMITED (3402--04), NEXT TO SHIKALIM CHURCH,SHIKALIM,VASCO,GOA - 403802
431. CHOWGULE INDUSTRIES PRIVATE LIMITED (3408--09), OPP BHRAMASTAL TEMPLE, PATRONG BAINA, VASCO,GOA - 403802

GUJARAT

AHMEDABAD

432. KIRAN MOTORS LIMITED (--01), SARKHEJ - GANDHINAGAR HIGHWAY,OPP. RAJPATH CLUB,AHMEDBAD - 380054
433. KATARIA AUTOMOBILES PRIVATE LIMITED (--01), D/8 BEHIND ESI HOSPITAL,OUTSIDE DARIAPUR DARWAJA,AHMEDABAD - 380016
434. POPULAR WHEELERS (INDIA) PVT LTD (--01), PATEL TRUST BUILDING, AVTAR HALL,NAROL, NARODA HIGHWAY,ISANPURA ROAD,AHMEDABAD - 382443
435. KIRAN MOTORS LIMITED (--02), BEHIND L&T GODOWN,SARKHEJ SANAND HIGHWAY, AHMEDABAD - 382210
436. KATARIA AUTOMOBILES PRIVATE LIMITED (--05), NEAR KOKHRA BRIDGE,MANINAGAR - 380008
437. KATARIA AUTOMOBILES PRIVATE LIMITED (--01), BEHIND ADANAL PUMP, ,NEAR MAKARBA CROSSING, MAKARBA,SG HIGHWAY - 380051
438. POPULAR WHEELERS (INDIA) PVT LTD (--01), BESIDE SOLA ROAD BRIDGE,S. G. HIGHWAY SOLA,AHMEDABAD - 380054
439. KIRAN MOTORS LIMITED (--01), SURVEY NO. 82/1/1, NEAR H.P. PETROL PUMP, MOTERA ROAD, CHANDKHEDA, AHMEDABAD - 380005
440. UDAY AUTOLINK PVT LTD (--01), NEAR GALAXY SPACIA, OPP. DASTAN FARM, S. P. RING ROAD, KATHWADA, AHMEDABAD, GUJARAT - 382430
441. NANDA AUTOMOBILES PVT LTD (--01), SURVEY NO. 229/3, OPP. GOKULESH PETROL PUMP, NAROL - ASLALI ROAD, NAROL, AHMEDABAD, GUJARAT. - 382405
442. STARLINE CARS PVT LTD (--01), PLOT NO. 103/2, NANDA CHILODA, NEAR RAILWAY CROSSING, KRISHNANAGAR ROAD, NARODA, AHMEDABAD - 382330
443. KIRAN MOTORS LIMITED (--02), FINAL PLOT NO.33/1/1, NEAR SHRUSHTI LAVISH, OPP. SHYAM VILLA-II, NARODA-NIKOL ROAD, NIKOL DISTT. AHMEDABAD - 382330
444. KIRAN MOTORS LIMITED (--04), SURVEY NO. 245/3, TP SCHEME NO. 43, NEAR KARGIL PETROL PUMP, SCIENCE CITY ROAD, AHMEDABAD - 380060
445. POPULAR WHEELERS (INDIA) PVT LTD (--01), BEHIND G. B. SHAH COLLEGE, NEAR SWAMINARAYAN PARK, VAISHALI TOWNSHIP ROAD, VASNA, AHMEDABAD, GUJARAT. - 380007
446. PEGASUS (A UNIT OF VISUAL AUTOLINK PVT LTD) (--01), PLOT NO. 116, BOPAL – AMBIL ROAD, BOPAL , AHMEDABAD, DISTRICT – AHMEDABAD, GUJARAT. - 380058
447. PEGASUS (A UNIT OF VISUAL AUTOLINK PVT LTD) (--01), PLOT NO.116 & 118/2, SARDAR PATEL RING ROAD, VASTRAL, AHMEDABAD - 382418
448. TANU MOTORS PVT LTD (--01), SURVEY NO. 1155/1-2, 1154 & 1156, PLOT NO. 39, SARKHEJ-SANAND ROAD, SANAND, AHMEDABAD (GUJARAT) - 382110
449. STARLINE CARS PVT LTD (--09), SR NO – TP - 57, PLOT NO. 67, NEAR GOTA FLYOVER BRIDGE, OPP. SHANKU FARM HOUSE, S.G. HIGHWAY, GOTA, AHMEDABAD. - 382481
450. KATARIA AUTOMOBILES PRIVATE LIMITED (--02), PLOT NO. 112, 116 & 119, SURVEY NO. 283/3.7.10, B/H SILVER STAR, BESIDE HARI VILLA BUNGLOWS, GOTA ROAD, CHANDLODIYA, AHMEDABAD. - 382481
451. KATARIA AUTOMOBILES PRIVATE LIMITED (--10), SURVEY NO. 247, TP NO. 73, OPP. PAVITRA ENCLAVE, MANSAROVER ROAD, NEAR HARI OM FARM, TRAGAD, CHANDKHEDA, AHMEDABAD. - 382470
452. NANDA AUTOMOBILES PVT LTD (--02), PLOT NO-6, BEHIND HP PETROL PUMP, OPP. UMIYA TEMPLE, CANAL ROAD, THALTEJ-SHILAJ ROAD, AHMEDABAD -380059. - 380059
453. KIRAN MOTORS LIMITED (--05), AMBER STATE, NEAR HONDA WORKSHOP, OPP. MG MOTORS, SANATHAL, AHMEDABAD - 382210

AMBAJI

454. TANU MOTORS PVT LTD (--01), OPP KUMBHARIYA JAIN DERASAR, GIDC ROAD, AMBAJI, DIST-BANASKANTHA, GUJARAT 385110 - 385110
PH :9727709227.

AMOD

455. RAVIRATNA MOTORS PVT LTD (--03), ROYAL PARK, JAMBUSAR-BHARUCH ROAD, AMOD, DISTRICT: BHARUCH, GUJARAT. - 392110

AMRELI

456. ALPHA AUTOLINK LLP (--01), R.S NO 151/152, OPP GANESH GINNING, AMRELI BYE PASS ROAD, AMRELI - 365601

ANAND

457. AMAR CARS PVT LTD (--01), JANTHA CROSSING,SOJITRA ROAD,ANAND - 388121
PH :9909960772.
458. KATARIA AUTOMOBILES PRIVATE LIMITED (--01), SURVEY NO. 189/1+2/A+3/A/K 190/P, OPP. OLD JAKAT NAKA, NEAR RAILWAY OVERBRIDGE, ANAND-CHIKHODRA ROAD, ANAND, GUJARAT. - 388120
PH :7698954466.

ANKLAV

459. KATARIA AUTOMOBILES PRIVATE LIMITED (--01), AMBICA COMPLEX, GROUND FLOOR SHOP NO. B, C AND D, ASODAR CHOKDI, TAL. ASODAR, CITY ANKLAV, DIST. ANAND, PIN-388510, GUJARAT - 388510
PH :7227917151.

ANKLESHWAR

460. RAVIRATNA MOTORS PVT LTD (--01), PLOT NO. 624/2/BA, GIDC, VALIA ROAD, ANKLESHWAR - 393002
PH :9687691063.

BAGODRA

461. NANDA AUTOMOBILES PVT LTD (--01), SHOP NO. 9, 10, 11, 12, KAMDHENU COMPLEX, BAGODRA HIGHWAY, NR. SBI BANK, BAGODRA. - 382240

BALASINOR

462. AMAR CARS PVT LTD (--01), SR. NO. 1451, OPP. OIC PETROL PUMP, AHMEDABAD HIGHWAY (NH-47), KANTHARJINA MUVADA, VILLAGE – VADALA, TALUKA – BALASINOR, DISTRICT – MAHISAGAR, GUJARAT. - 388255
PH :7211109960.

BARDOLI

463. DHRU MOTORS (4002--02), G.I.D.C,SURAT BARDOLI ROAD,BARDOLI, - 394601
464. KATARIA AUTOMOBILES PRIVATE LIMITED (--02), BLOCK NO.13, NANDIDA CROSS ROAD, BARASADI VILLAGE, SURAT-BARDOLI ROAD, BARDOLI, GUJARAT - 394310

BAREJA

465. KATARIA AUTOMOBILES PRIVATE LIMITED (--01), NH 64, BAREJA, DISTRICT AHMEDABAD, GUJRAT - 382425
PH :7046079997.

BARWALA (AHMEDABAD)

466. UDAY AUTOLINK PVT LTD (--01), OPP. HILTON HOTEL, BHAVNAGAR HIGHWAY, TA BARWALA, DIST. AHMEDABAD - 382450

BAVLA

467. KATARIA AUTOMOBILES PRIVATE LIMITED (--07), NEAR ESSAR PETROL PUMP, BAVLA -AHMEDABAD HIGHWAY, BAVLA - 382220

BECHRAJI

468. STARLINE CARS PVT LTD (--01), R.S. NO. 336 PAIKI, MOJE-BECHAR (BECHARAJI), TALUKA - BECHARAJI, DIST.-MEHSANA. - 384210
PH :9909043244.

BHABHAR

469. STARLINE CARS PVT LTD (--01), SHOP NO. 7, 8 ,9, SIDDHI VINAYAK BUSINESS HUB, R.S. NO. 225, PANJRAPOLE ROAD, BHABAR, DIS. -BANASKANTHA, GUJARAT. - 385320

BHACHAU

470. K D MOTORS (--02), SUNRISE MALL,OPP. BUS STAND,BHACHAU BHUJ ROAD, BHACHAU, GUJARAT - 370140

BHANVAD

471. ATUL MOTORS JAM LLP (--01), R.S. NO.439, PLOT NO.19, BHANVAD (GUJARAT) - 360510

BHARUCH

472. RAVIRATNA MOTORS PVT LTD (--01), NH 8, OPP YOGI PETROL PUMP,P.O. ZADESHWAR,BHARUCH - 392011

BHAVNAGAR

473. KATARIA AUTOMOBILES PRIVATE LIMITED (--01), SURVEY NO 137/2, PLOT NO 301/2&3 AND 301/4&5, VERTEJ GIDC, NARI CHOWKDI, RAJKOT ROAD, BHAVNAGAR. - 364004
PH :9426168286.

474. KATARIA AUTOMOBILES PRIVATE LIMITED (--02), PLOT NO-29, NR. TALAJA OCTROI CIRCLE, JAKATNAKA, AT-ADHEWADA, DIST-BHAVNAGAR, GUJARAT – 364002. - 364002
PH :9638884422.

BHUJ

475. K D MOTORS (--01), PLOT NO. 5/6/14,UMANAGAR,MIRZAPUR HIGHWAY ROAD , BHUJ,GUJARAT - 370001

476. K D MOTORS (--03), R.S NO. 25/2, 25/3, 26/2, PLOT NO. 57 TO 61, VILLAGE - MIRZAPUR, TALUKA - BHUJ, GUJARAT. - 370001
PH :9909953124.

BODELI

477. KIRAN MOTORS LIMITED (--01), OPP.NARMADA GUEST HOUSE,DABHOI ROAD, BODELI, TALUKA: SANKHEDA,VADODARA - 391135
PH :9714592999.

BORSAD

478. AMAR CARS PVT LTD (--01), BORSAD – TARAPUR HIGHWAY, BORSAD , DISTRICT – ANAND, GUJARAT - 388540

BOTAD

479. KATARIA AUTOMOBILES PRIVATE LIMITED (--19), PLOT NO.13, SURVEY NO 33,34, AND 35 PAIKKI VILLAGE, HADADAD, OPP. PATEL HYUNDAI SHOWROOM, PALIYAD BOTAD ROAD - 364710
PH :9558060658.

CHANASMA

480. STARLINE CARS PVT LTD (--01), 16/17, PASABHI COMPLEX, NEAR ROYAL PALACE HOTEL, MEHSANA HIGHWAY, CHANASMA. - 384220

CHANDRALA

481. NANDA AUTOMOBILES PVT LTD (--01), HIMMATNAGAR HIGHWAY NO.8, NEAR DEVANSHI PARTY PLOT, CHANDRALA, DIST-GANDHINAGAR, GUJARAT - 382320

CHANGODAR

482. PEGASUS (A UNIT OF VISUAL AUTOLINK PVT LTD) (--01), SURVEY NO.393, VILLAGE – MORAIYA, CHANGODAR, TALUKA – SANAND, SUN DISTT - AHEMADABAD. - 382210
PH :7211120014.

CHHOTAUDEPUR

483. KIRAN MOTORS LIMITED (--01), PLOT NO. 29-30, SURVEY NO. 137, OPP. TO SP OFFICE, CHHOTA UDEPUR - 391165

CHIKHLI

484. KATARIA AUTOMOBILES PRIVATE LIMITED (--01), SURVEY NO.461, VILLAGE-MAJIGAM, TALUKA-CHIKHALI, DISTT-NAVSARI, GUJARAT - 396521
PH :7698953899.

CHILODA

485. PEGASUS (A UNIT OF VISUAL AUTOLINK PVT LTD) (--01), PLOT NO. 332, BESIDES GALLOPS TATA, NH-8, CHILODA-HIMMATNAGAR HIGHWAY, CHILODA. - 382355

CHOTILA

486. DREAM VEHICLES PVT LTD (--01), SURVEY NO. 31, PLOT NO. 1, NILKANTH SOCIETY, NH NO. 8A, AHMEDABAD-RAJKOT, AT & PO – CHOTILA, DISTRICT – SURENDRANAGAR, GUJARAT. - 363520
PH :9227775709.

CHUDA

487. DREAM VEHICLES PVT LTD (--01), NR. GOVT HOSPITAL,CHATARLIYA ROAD,CHUDA,SURENDRANAGAR. - 363410
PH :9313802500.

DABHOI

488. KATARIA AUTOMOBILES PRIVATE LIMITED (--01), OPP. VEGA BUS STOP, NEAR VEGA CROSS ROAD, DABHOI-BODELI ROAD, DABHOI, TA:DABHOI, DI:VADODARA - 391110
PH :8156000463.

DAHOD

489. R B CARS PVT LTD (--02), NEAR SIMANDHAR JAIN TEMPLE, OLD INDORE HIGHWAY,DAHOD - 389151

DANTIWADA

490. TANU MOTORS PVT LTD (--01), VISHWAS COMPLEX, OPP HINGLAJ PETROL PUMP, NR. JAIN DERASAR, DANTIWADA HIGHWAY, AT-PO PANTHWADA, TALUKA-DANTIWADA, DIST-BANASKANTHA - 385545
PH :9099940424.

DEDIAPADA

491. RAVIRATNA MOTORS PVT LTD (--01), SURVEY NO-124/45, PLOT NO-1, VILLAGE-NIVALDA, TA-DEDIAPADA, DIST-NARMADA. - 393040

DEESA

492. TANU MOTORS PVT LTD (--03), NH-14, NR. ESSAR PETROL PUMP, RADHANPUR HIGHWAY, HANUMAN NAGAR, MALGADH, DEESA - 385535
PH :9909006099.

DEHGAM

493. NANDA AUTOMOBILES PVT LTD (--03), SURVEY NO. 311, MOJE PALIYA TALUKA DEHGAM, GANDHINAGAR, GUJARAT-382305 - 382305

DETROJ

494. PEGASUS (A UNIT OF VISUAL AUTOLINK PVT LTD) (--01), PLOT NO-61,MILKAT NO-2534, AT-DETROJ,TALUKA-DETROJ-RAMPURA-382120 - 382120
PH :7971846442.

DEVGARHBARIA

495. R B CARS PVT LTD (--05), BESIDE ARIHANT PETROL PUMP, PIPLOD ROAD, DEVGADH BARIA - 389380

DHANERA

496. TANU MOTORS PVT LTD (--01), 01 & 02, MARUTI NANDAN COMPLEX, NEAR ESSAR PETROL PUMP, DHANERA-DEESA HIGHWAY, DHANERA. - 385310

DHARAMPUR

497. KATARIA AUTOMOBILES PRIVATE LIMITED (--01), SURVEY NO.29/3/P1, VILLAGE ASHURA NR. ASHURA CIRCALE, DHARAMPUR DISTT. VALSHAD, GUJARAT - 396050
PH :9723455291.

DHARI

498. ALPHA AUTOLINK LLP (--01), PLOT NO. 9, DHARI - KHAMBHA ROAD, NEAR RAILWAY FATAK DHARI , TALUKA - DHARI, DIST. - AMRELI, GUJARAT. - 365640

DHOLKA

499. TANU MOTORS PVT LTD (--01), SURVEY NO. 722, OPPOSITE RANI RUDY MATAJI MANDIR, DHOLKA KALIKUND HIGHWAY, DHOLKA, GUJARAT - 382225
PH :9512009104.

DHORAJI

500. PERFECT AUTO SERVICES (A DIVISION OF PERFECT RETREADS PVT LTD) (5502--09), JETPUR ROAD, OPP. SHRINATHJI SOCIETY, DHORAJI - - 360410

DHRANGADHRA

501. DREAM VEHICLES PVT LTD (--01), PLOT NO. 79, SURENDRANAGAR- DHRANGADHRA ROAD, OPP. ARMY WORKSHOP, DISTRICT-SURENDRANAGAR. - 363310
PH :9227775725.

DIYODAR

502. TANU MOTORS PVT LTD (--01), NR.HP PETROL PUMP, BHESANA CROSS ROAD, BHABHAR HIGWAY,DIYODAR-385330
PH :9099017756.

DWARKA

503. ATUL MOTORS JAM LLP (--01), SURVEY NO. 41, NEAR, SHRI SANTAN SEVA MANDAL, CORNER PLOT OF STATION ROAD AND HIGHWAY ROAD, DWARKA, DISTRICT – DWARKA – . - 361335

GANDHI NAGAR

504. NANDA AUTOMOBILES PVT LTD (--01), 1003,SECTOR-28,GANDHI NAGAR - 382028

505. NANDA AUTOMOBILES PVT LTD (--05), PLOT NO. 805, GIDC, SECTOR-28, GANDHINAGAR. - 382028

GANDHIDHAM

506. B.M. AUTOLINK (7702--03), SURVEY NO.129/26 P, GALPADAR HIGHWAY, GANDHIDHAM , DISTT.KACHCHH, GUJARAT. - 370110

GODHRA

507. R B CARS PVT LTD (--01), PLOT NO. 112/11.,12-VAVDI,GODARA - DAHOD HIGHWAY, GODHRA, PANCHMAHAL, GUJARAT - 389001

508. R B CARS PVT LTD (--04), SURVEY NO.107, LUNAWADA ROAD, GIDC, GODHRA, DISTT. PANCHMAHAL-389001. - 389001

GONDAL

509. ATUL MOTORS PVT LTD (5503--05), 8-B NATIONAL HIGHWAY, OPP. DAULAT OIL MILL, NR. NILKANTH VIRUDASHRAM, RAJKOT HIGHWAY,GONDAL - 360311

510. ATUL MOTORS PVT LTD (5503-55-06), RAJKOT AHMEDABAD HIGHWAY, NR. CHANDARANA PETROL PUMP, OPP. GUJARAT SAMACHAR PRESS, AT. NAVAGAM RAJKOT - 360003
PH :9924688774.

511. ATUL MOTORS PVT LTD (--01), NEAR ASHAPURA RAILWAY CROSSING, RAJKOT-PORBANDAR NATIONAL HIGHWAY, GONDAL-360311. - 360311

GOZARIA

512. VIMCO MOTORS PVT LTD (--01), 1597/339 P4 VISHNAGAR-GOZARIYA ROAD, GOZARIYA, DIST.-MEHSANA. - 382825
PH :7016623842.

HALOL

513. R B CARS PVT LTD (--01), PLOT NO. 104/6 & 104/8, VADODARA – GODHRA HIGHWAY, NEAR NAVJIVAN HOTEL, HALOL, DISTRICT – PANCHMAHAL, GUJARAT - 389350

HALVAD

514. DREAM VEHICLES PVT LTD (--01), PLOT NO.5 & 6, NAKLANKDHAM TOWNSHIP, OPP. HONEST RESTAURANT, AHMEDABAD HIGHWAY, HALVAD DISTT. SURENDRANAGAR (GUJARAT) - 363330
PH :8238000965.

HANSOT

515. RAVIRATNA MOTORS PVT LTD (--01), AT UTRAJ, HANSOT, DISTRICT - BHARUCH. - 393030
PH :9687691063.

HIMATNAGAR

516. KIRAN MOTORS LIMITED (--01), NEAR G.I.D.C,MOTIPURA, HIMMATNAGAR - 383001

HISAR

517. COMET CAR SALES & SERVICE PVT LTD (4006-40-04), SAROLI VILLAGE, NEAR SAIBABA MANDIR, SURAT-OLPAD ROAD - 394520

IDER

518. KIRAN MOTORS LIMITED (--01), SURVEY NO.69 IDAR-AMBAJI ROAD, IDAR DIST: SABARKANTHA - 383430

JAMBUSAR

519. RAVIRATNA MOTORS PVT LTD (--01), SURVEY NO-2939-2954, PLOT NO-2, VILLAGE-JAMBUSAR, TALUKA-JAMBUSAR, DIST-BHARUCH. - 392150
PH :9687667595.

JAMJODHPUR

520. ATUL MOTORS JAM LLP (--01), NEAR HDFC BANK, GAYATRI MANDIR ROAD, JAMJHODPUR, DIST-JAMNAGAR (GUJARAT) - 360530. - 360530
PH :9537888988.

JAMNAGAR

521. ATUL MOTORS JAM LLP (--01), SURVEY NO.422, PLOT NO. 16,17 & 19, JAMNAGAR, GUJARAT - 361001

522. ATUL MOTORS JAM LLP (--02), C-36, MP SHAH ARUN UDYOG, SARUSECTION ROAD, JAMNAGAR - 361002

523. ATUL MOTORS JAM LLP (--03), OPP MADHAV BAUG1, NEAR RAILWAY OVER BRIDGE, JAMNAGAR, GUJARAT-361006. - 361006
PH :9574004709.

JASDAN

524. ATUL MOTORS PVT LTD (5503--09), SURVEY NO. 1253, PLOT NO. 4, NEAR KALYAN PETROL PUMP, JASDAN-ATKOT HIGHWAY, JASDAN, DIST.-RAJKOT, GUJARAT. - 360050
PH :9265404142.

JHALOD

525. R B CARS PVT LTD (--01), SURVEY NO. 2550B/10, 11, AT - JHALOD, TALUKA- JHALOD, DISTRICT - DAHOD. - 389170

JUNAGARH

526. PERFECT AUTO SERVICES (A DIVISION OF PERFECT RETREADS PVT LTD) (5502--02), PLOT NO. 81-82,G.I.D.C. DOLATPURA,RAJKOT-JUNAGARH HIGHWAY, JUNAGARH - 362001

527. PERFECT AUTO SERVICES (A DIVISION OF PERFECT RETREADS PVT LTD) (5502--06), SURVEY NO.45/1, PLOT NO. 214-C/D/E/F, GIDC-I, DOLATPARA, JUNAGADH - 362001

KADI

528. STARLINE CARS PVT LTD (--07), OPP. COTTON MARKETING YARD, KADI-CHATRAL ROAD, TAL: KADI, DIST: MEHSANA - 382715
PH :8160707156.

KAKANPUR

529. R B CARS PVT LTD (--01), SURVEY NO.618/2, PAIKI PLOT NO. 29,30,31 AT. KAKANPUR, TAL. GODHRA, DISTRICT. PANCHMAHAL PIN-388713. - 388713
PH :9099049347.

KALAVAD

530. ATUL MOTORS JAM LLP (--01), SANIDHYA ARCADE, NEAR SANIDHYA PARTY PLOT, KALAVAD – DHORAJI ROAD, KALAVAD. - 361160
PH :9574222111.

KALOL

531. NANDA AUTOMOBILES PVT LTD (--01), PLOT NUMBER 1147,1148, MEHSANA HIGHWAY, KALOL, GANDHINAGAR - 383028

KAPADVANJ

532. AMAR CARS PVT LTD (--01), SAMARTH SQUARE, SHOP NO. 1, MODASA KAPADWANJ ROAD, KAPADVANJ, GUJARAT-387620 - 387620
PH :9909960761.

KAPRADA

533. KATARIA AUTOMOBILES PRIVATE LIMITED (--01), AT&POST. KAPRADA, DHARAMPUR - NASIK ROAD, N.H.67& 848. TA.KAPRADA, DIST. VALSAD - 396065

KARJAN

534. AMAR CARS PVT LTD (--01), SURVEY NO.851/787 BESIDE PMT TOOLS, KANDARI, N.H. -8, KARJAN, DISTT-VADODRARA (GUJARAT) - 391210

KATHLAL

535. AMAR CARS PVT LTD (--01), MAHAVEER AUTO SHOWROOM, NADIAD ROAD, JB PLAZA, KATHLAL, GUJARAT. - 387630
PH :9909960761.

KAWANT

536. RAVIRATNA MOTORS PVT LTD (--01), SURVEY NO :35 , NASVADI KAVANT ROAD, KAVANT, DIST: CHOTTA UDEPUR. - 391170

KESHOD

537. PERFECT AUTO SERVICES (A DIVISION OF PERFECT RETREADS PVT LTD) (--01), R S NO. 125/1, GODOWN NO. 01, SONDARDA, TALUKA – KESHOD, DISTRICT – JUNAGADH, GUJARAT. - 362220
PH :7043999073.

KHAMBHAT

538. AMAR CARS PVT LTD (--01), PLOT NO. 7/8/9, RAJMAHAL PARK, OPP. SARDAR CHATRALAY, LAL DARWAJA, GAYATRINAGAR ROAD, KHAMBHAT, TALUKA KHAMBHAT, ANAND DISTRICT, GUJARAT - 388620
PH :9909960772.

KHANVEL

539. KATARIA AUTOMOBILES PRIVATE LIMITED (--01), SURVEY NO 40/3, SILVASA KHANVEL ROAD, KHANVEL, GUJARAT - 396230

KHEDA

540. AMAR CARS PVT LTD (--01), S.NO.708, PLOT NO.1, VILLAGE-SOKHDA, TAL: MATER, DISTT. KHEDA, GUJARAT - 387570
PH :9909960761.

KHEDBRAHMA

541. KIRAN MOTORS LIMITED (--01), AMBAJI ROAD, KHEDBRAHMA, DIST. – SABARKANTHA, PIN – 383255 - 383255
PH :9824010721.

KHERALU

542. STARLINE CARS PVT LTD (--01), R S NO. 4962 MAHAVIR COMPLEX, KHERALU, DIST. -MEHSANA. - 384325

KHERGAM

543. KATARIA AUTOMOBILES PRIVATE LIMITED (--01), SANVIRA HAT BAZAAR, KHERGAM-DHARAMPUR HIGHWAY ROAD, SH-67, KHERGAM, PIN-396040. - 396040
PH :9624007774.

KIM

544. KATARIA AUTOMOBILES PRIVATE LIMITED (--01), PLOT NO. 116-121, DAL MILL COMPOUND, OPP. SURAT JILLA SANGH, KIM CROSS ROAD, NH-8, KIM - 394110
PH :9723555185.

KODINAR

545. PERFECT AUTO SERVICES (A DIVISION OF PERFECT RETREADS PVT LTD) (--01), R.S.NO.222, PLOT NO.2, 3 SHOPS, KODINAR-362720 DISTT. JUNAGADH, GUJARAT - 362720

KOSAMBA

546. KATARIA AUTOMOBILES PRIVATE LIMITED (--01), SURVEY NO-629, OPP. PIRAMAL GLASS COLONY, KIM KOSAMBA MAIN ROAD, KOSAMBA, DISTRICT- SURAT, GUJRAT - 394120

KUKARWADA

547. STARLINE CARS PVT LTD (--01), SHOP NO.1741, 1742 AND PLOT NO.1752, KUKARWADA TALUKA, VIJAPUR, DISTT MAHESANA (GUJARAT) - 382830

LAJPUR

548. AMAR CARS PVT LTD (--01), NEAR INDIANOIL PETROL PUMP, ACHIN, NAVSARI ROAD, DIST. SURAT - 394235

LALSAR

549. R B CARS PVT LTD (--01), SURVEY NO-202, AT-LALSAR, LALSAR-LUNAWADA HIGHWAY, TALUKA-LUNAWADA PIN-388270. - 388270

LAVANA

550. R B CARS PVT LTD (--01), AT PO -LAVANA, NEAR BABILIYA CROSSING, MODASA ROAD, LAVANA-389230 - 389230

LIMBASI

551. AMAR CARS PVT LTD (--01), SURVEY NO 2495, OPP PHC CENTER, VILLAGE -LIMBASI - 387250

LIMBDI

552. DREAM VEHICLES PVT LTD (--01), SURVEY NO.276/1, NEAR PANCHVATI HOTEL, LIMDI CROSS ROAD, AHMEDABAD-RAJKOT HIGHWAY, LIMDI, DISTT. SURENDRANAGAR, GUJARAT. - 363421

LUNAWADA

553. R B CARS PVT LTD (--01), SURVEY NO.90, AT-BHAYASAR, GODHRA-LUNAWADA HIGHWAY, LUNAWADA , TALUK-LUNAWADA, DISTT-MAHISAGAR, GUJARAT. - 389230

MADHI

554. DHRU MOTORS (--01), MADHI SYADLA, BAJIPURA ROAD,, ATPOS, MADHI, SYADLA, TAPI, - 394340

MAHUVA (BHAVNAGAR)

555. KATARIA AUTOMOBILES PRIVATE LIMITED (--01), V.P. COMPLEX, BUNDER RD, NR. GAUSHALA, BARPARA, MAHUVA, GUJARAT 364290. - 364290
PH :6357327534.

MAHUVA (SURAT)

556. KATARIA AUTOMOBILES PRIVATE LIMITED (--01), BLOCK NO. 14/2, VILLAGE BUDHALESHWAR, SURAT SAPUTARA STATE HIGHWAY,TAL. MAHUVA, DIST. SURAT - 394250 - 394250

MANAVADAR

557. PERFECT AUTO SERVICES (A DIVISION OF PERFECT RETREADS PVT LTD) (--01), RS NO. 13/1, 14, PLOT NO. 48, BHAKTINAGAR, TALUKA - MANAVADAR, DIST.-JUNAGADH. - 362630
PH :7043999073.

MANDAL

558. KIRAN MOTORS LIMITED (--01), SURVEY NO. 708, MANDAL - DETROJ HIGHWAY, NR. RELIANCE PETROL PUMP, MANDAL , DI: AHMEDABAD, GUJARAT. - 382130
PH :9408803925.

MANDVI

559. K D MOTORS (--01), PLOT NO.25,26 & 27, RAJ COMMERCIAL, SURVEY NO.246, NEAR "THE BEACH RESORT", MANDVI NALIYA ROAD, MANDVI-KUTCH - 370465

560. KIRAN MOTORS LIMITED (--01), C.S NO-3278, ZHANKHAVAV-MANDVI ROAD, DHOBANI NAKA, MANDVI - 394160. - 394160

MANGROL

561. KATARIA AUTOMOBILES PRIVATE LIMITED (--01), PLOT NO. 12-28, MOSALI, MANGROL, DISTRICT-SURAT. - 394410
PH :6357071775.

MANSA

562. NANDA AUTOMOBILES PVT LTD (--04), SURVEY NO. 1686, NR. UMA PETROLEUM (INDIAN OIL), RAJPURA CROSS ROADS, MANSA GANDHINAGAR HIGHWAY, MANSA -382845. - 382845
PH :9727921000.

MEHMDABAD

563. AMAR CARS PVT LTD (--01), PATEL FALIYA, KHATRAJ, MEHMEDABAD, DIST.-KHEDA, GUJARAT. - 387130
PH :9909960761.

MEHSANA

564. STARLINE CARS PVT LTD (--01), NAGALPUR HIGHWAY,MAHESANA , GUJRAT - 384002
PH :9909043635.

565. TANU MOTORS PVT LTD (--04), SURVEY NO.78, NEAR SUNRISE AUTOMOBILES (AMW DEALER), GUJARAT STATE HIGHWAY NO.41, MEHSANA - 384002
PH :9909006076.

566. VIMCO MOTORS PVT LTD (--01), SURVEY NO. 104 & 104 PAIKI 1, AT P.O. - PALAVASANA, MEHSANNA, GUJARAT. - 384002
PH :8909953333.

567. VIMCO MOTORS PVT LTD (--02), SHOP # 7&8, TIRUPATI SAHIBAGH MARKET, MEHSANA – RADHANPUR ROAD, NEAR SAHAJ VILLA, MEHSANA - 380002. - 380002
PH :8909953333.

METODA

568. ATUL MOTORS PVT LTD (5503--08), PLOT NO. 2328, GATE NO. 2, METODA GIDC, METODA, TALUKA LODHIKA, DISTRICT - RAJKOT, GUJARAT - 360021

MODASA

569. KIRAN MOTORS LIMITED (--02), SHAMLAL JI ROAD,SABARKANTHA DIST., MODASA - 383315

MORBI

570. PERFECT AUTO SERVICES (A DIVISION OF PERFECT RETREADS PVT LTD) (5502--07), SURVEY NO. 351/2, PLOT NO. 10, DHARTI INDUSTRIAL AREA, RAJPURA ROAD, SANALA, MORBI , TEHSIL-MORBI, DISTT.-MORBI, GUJARAT. - 363641

571. DREAM VEHICLES PVT LTD (--03), PLOT NO 2, DHARM GOLD INDUSTRIAL ESTATE, PIPLI JETPUR HIGHWAY, DIST MORBI, PIN 363642 - 363642
PH :7069089532.

MOTI KHAVADI

572. ATUL MOTORS JAM LLP (--01), PLOT NO.22 & 29, NEAR PADANA POLICE STATION, JAMNAGAR-KHAMBHALIYA HIGHWAY, MOTI KHAVDI, ZANKHAR, TA: LALPUR, DIST - JAMNAGAR, GUJARAT. - 361140

MUNDRA-DOM

573. B.M. AUTOLINK (7702--02), PRAGPAR ROAD,MUNDRA,DISTRICT-KUTCH, GUJARAT, - 370421

MUVAL

574. AMAR CARS PVT LTD (--01), YOGI RESIDENCY MOVAL CHOKDI, PADRA- JAMBUSAR HIGHWAY – MUVAL, TALUKA-PADRA, VADODARA. - 391430

NADIAD

575. AMAR CARS PVT LTD (--02), NEAR RAJHANS MULTIPLEX,NADIAD-UTTARSANDA ROAD - 387370
PH :9909960761.

NAKHATARANA

576. K D MOTORS (--01), PLOT NO-1, RS NO-19, AT-NANA ANGIYA, TALUKA-NAKHATRANA, KUTCH
PH :9909953119.

NALIYA

577. K D MOTORS (--01), AT PO - SHAKTI SOCIETY, MAHAVIR NAGAR, PLOT(1), OPP. BANK OF BARODA, NALIYA, TAL-ABDASA, KUTCH. - 370655
PH :9909953119.

NANA PONDHA

578. AMAR CARS PVT LTD (--01), SHOP NO 7-11, JALASHAI SHOPPING CENTER, AT-NANA PONDHA, TALUKA- KAPRADA, DIST-VALSAD - 396126
PH :7227971155.

NANDASAN

579. TANU MOTORS PVT LTD (--01), M/S TANU MOTORS PVT LTD, AT&PO-NANDASAN, TALUKA-KADI, DIST-MEHSANA 382705 - 382705

NASWADI

580. RAVIRATNA MOTORS PVT LTD (--01), HOUSE NO-301,302,303, IN VALPURA-RAMLALNAGAR, VILLAGE AT-NASWADI, DIST: CHOTTA UDEPUR - 391150
PH :9687691047.

NAVSARI

581. KATARIA AUTOMOBILES PRIVATE LIMITED (--01), PLOT NO.-891, OPP PAUVA MILL, NH-8,NEAR GANESH SISODRA CHOKDI,GANESH SISODIA NAVSARI, GUJRAT - 396463
PH :9723430012.

NETRANG

582. RAVIRATNA MOTORS PVT LTD (--01), SURVEY NO. 184, PLOT NO. 1 & 2, VILLAGE - NETRANG, TALUKA - VALIA, DIST.-BHARUCH. - 393130
PH :9687691063.

OLPAD

583. COMET MOTORS (A UNIT OF COMET CAR SALES & SERVICE PVT LTD) (4006--02), 1906/1907, OPP. KUMBHARVAD, JUNA PURA, OLPAD - 394540
PH :9099916099.

PADRA

584. AMAR CARS PVT LTD (2205--02), NEAR WESTERN BYPASS, AT SAMIYALA, PADRA, DIST. – VADODARA, GUJARAT - 391440

PALANPUR

585. TANU MOTORS PVT LTD (--01), OPP.DHARTI RESORT, ABU- AHMEDABAD HIGHWAY, PALANPUR - 385001
PH :9099017756.

586. STARLINE CARS PVT LTD (--08), SURVEY NO.4 & 5/2, OPPOSITE L K PETROL PUMP, PALANPUR-DEESA HIGHWAY, PALANPUR-385001, DISTT BANASKANTHA, GUJARAT - 385001
PH :9824601793.

PALEJ

587. RAVIRATNA MOTORS PVT LTD (--01), PLOT NO. 626/6, GIDC AREA, PALEJ, DISTRICT - BHARUCH - 392220

PALITANA

588. KATARIA AUTOMOBILES PRIVATE LIMITED (--01), PLOT NO 15, YASOVIJAYNAGAR, NEAR RAILWAY CROSSING, PALITANA HIGHWAY, PALITANA-364270 DIST BHAVNAGAR. - 364270
PH :6357314891.

PALSANA

589. KATARIA AUTOMOBILES PRIVATE LIMITED (4004--07), BESIDE SAINATH COMPLEX, KADODARA AHMEDABAD ROAD , NH-8, UMBHEL GAM,TALUKA: PALSANA KADODARA, SURAT. - 382721
PH :9924446895.

PARDI

590. AMAR CARS PVT LTD (--01), OPPOSITE MORARJI DESAI MEMORIAL HALL, SERVICE ROAD N.H-48, KILLA-PARDI, DIST-VALSAD - 396125
PH :7226800777.

PATAN

591. STARLINE CARS PVT LTD (--02), CHANASMA HIGHWAY, PATAN - 384265
PH :7046046187.

PATDI

592. DREAM VEHICLES PVT LTD (--01), R.S. NO.1614/2, PLOT NO.16, PATDI TALUKA DASADA, DISTT. SURENDRANAGAR, GUJARAT - 382765
PH :9227775709.

PAVI JETPUR

593. PERFECT AUTO SERVICES (A DIVISION OF PERFECT RETREADS PVT LTD) (--01), NEAR ANKUR HOTEL, OPP. DHARESHWAR GEB STATION, PITHADIA, RAJKOT HIGHWAY, JETPUR (GUJARAT). - 360370

PETLAD

594. AMAR CARS PVT LTD (--01), SURVEY NO. 396/2, RANGAIPUR VILLAGE, PETLAD, DIST.-ANAND. - 388450
PH :9099017068.

POR

595. AMAR CARS PVT LTD (--01), SANKRUTI COMPLEX, POR KAYAVAROHAN ROAD, OPPOSITE OM BUNGALOWS. POR GUJARAT 391243 - 391243

PORBANDAR

596. ATUL MOTORS JAM LLP (--01), PLOT NO. 208, GIDC VANANA, NATIONAL HIGHWAY , PORBANDAR, DIST. PORBANDAR GUJARAT - 360577

PRANTIJ

597. KIRAN MOTORS LIMITED (--01), NO.6/P, OPP. VEGETABLE MARKET, PRANTIJ HIGHWAY, VILLAGE-KHAMALPUR, TALUKA-PRANTIJ, DISTT. SABARKANTHA, GUJARAT - 383205

RADHANPUR

598. STARLINE CARS PVT LTD (--01), SURVEY NO. 208/A, MOUJA – RADHANPUR, RADHANPUR MAIN ROAD, DISTRICT – PATAN, GUJARAT. - 385340

RAJKOT

599. PERFECT AUTO SERVICES (A DIVISION OF PERFECT RETREADS PVT LTD) (5502-55-01), PERFECT HOUSE,GONDAL ROAD,VANDI,RAJKOT - 360004
600. ATUL MOTORS PVT LTD (5503-55-01), PLOT NO.49/1 & 2, GIDC, BHAKTI NAGAR INDUSTRIAL ESTATE, RAJKOT. - 360002
PH :8140909093.
601. PERFECT AUTO SERVICES (A DIVISION OF PERFECT RETREADS PVT LTD) (5502-55-04), 150 RING ROAD,OPP. GANDHIGRAM POLICE CHOWKI,RAJKOT - 360005
602. ATUL MOTORS PVT LTD (5503-55-02), BEHIND HP PUMP,UNIVERSITY ROAD ,NEAR SNK SCHOOL, RAJKOT - 360005
PH :8347005382.
603. PERFECT AUTO SERVICES (A DIVISION OF PERFECT RETREADS PVT LTD) (5502--08), R.S. NO. 50/1, 150 FEET RING ROAD, RAIL NAGAR, RONKI, RAJKOT, GUJARAT. - 360006
604. KATARIA AUTOMOBILES PRIVATE LIMITED (5504-55-01), S. NO. 10/1, TPS NO. – 10, KALAVAD ROAD, MOTAMAVA, RAJKOT, GUJARAT. - 360001
PH :7573870001.
605. KATARIA AUTOMOBILES PRIVATE LIMITED (5504-55-02), OPP.ADARSH MARBLE,BESIDE SANNY PAJI KA DHABA, JAMNAGAR-RAJKOT HIGHWAY, - 360001

RAJPARDI

606. RAVIRATNA MOTORS PVT LTD (--01), R.S.NO.973, CTS NO. 1298, SHOPS PLOT NO.29 & 30, MOJE RAJPARDI, TALUKA-JHAGADIA, DISTT. BHARUCH - 393115

RAJPIPLA

607. RAVIRATNA MOTORS PVT LTD (--01), OPP. JALARAM SAW MILL, NEAR HARSIDDHI MATAJI TEMPLE, RAJPIPLA, DIST: NARMADA, GUJARAT - 393145

RAJULA

608. ALPHA AUTOLINK LLP (--01), R.S NO 96/3, PLOT NO-6 & 7, HINDORNA ROAD, RAJULA CITY, TALUKA-RAJULA. - 365560
PH :9033409043.

RANPUR

609. KATARIA AUTOMOBILES PRIVATE LIMITED (--01), SURVEY NO -624/1,P2 PALIYAD ROAD, TALUKA RANPUR, DIST- BOTAD, GUJARAT. - 382245

RAPAR

610. B.M. AUTOLINK (--01), PARAGPAR CHAAR RASTA RAPAR GHANDHIDHAM KUTCH - 370165
PH :9727725723.

SAMI

611. STARLINE CARS PVT LTD (--01), SHOP NO. 55-56, AMBESHWAR PLAZA, SAMI-HARIJ ROAD. - 384240
612. VIMCO MOTORS PVT LTD (--01), SURVEY NO 917, VIRA SHOPPING CENTER, AT-SAMI, TALUKA-HARIJ, DIST-PATAN, GUJARAT. - 384245
PH :8909953333.

SANTEJ

613. NANDA AUTOMOBILES PVT LTD (--01), SUB PLOT NO. 05, SHOP NO. 3 & 4, BLOCK NO. 1162, SANTEJ, KALOL. - 380060
PH :9727822000.

SANTRAMPUR

614. R B CARS PVT LTD (--01), NEAR PTC COLLEGE, SANT ROAD, SANTRAMPUR,DISTT.-PANCHMAHAL - 389260

SARDHAR

615. ATUL MOTORS PVT LTD (--01), PLOT NO.1, NEAR VISHWA CATER FEED, RAJKOT-BHAVNAGAR NATIONAL HIGHWAY - 360025

SAVLI

616. KIRAN MOTORS LIMITED (--01), SURVEY NO. 2592/1 PAKKI 2, NEAR RELIANCE PETROL PUMP, BHADRVA CHOWKDI, SAVLI – TIMBA ROAD, SAVIL, TALUK – SAVLI, DISTRICT – VADODARA, GUJARAT. - 391770
PH :7984799054.

SAYAN

617. KIRAN MOTORS LIMITED (--01), PLOT NO.6 TO 10 OF R BLOCK, SURVEY NO.209, VILLAGE PARIA, TALUKA: OLPAD, SAYAN - 394130

SAYLA

618. DREAM VEHICLES PVT LTD (--01), LALGURU COMPLEX, SUDAMDA ROAD, SAYLA, DISTRICT SURENDRANAGAR, GUJARAT PIN 363430 - 363430
PH :9227775709.

SELAMBA

619. RAVIRATNA MOTORS PVT LTD (--01), CITY SURVEY NO. NA124/2/1, VILLAGE :- GHANSHERA, SELAMBA TALUKA:- SAGBARA, DIST:- NARMADA, PIN CODE:- 393050 - 393050

SHANKESHWAR

620. STARLINE CARS PVT LTD (--01), MANIBHADRA SHOPPING CENTRE, SHANKHESHWAR HIGHWAY, SHANKHESHWAR (GUJARAT)- DIST: PATAN - 384246
PH :9824601729.

SHAPAR

621. ATUL MOTORS PVT LTD (--01), SHOP NO. 1 TO 4, SURVEY NO. 305/1, PLOT NO. 169, SHAPAR, DISTRICT – RAJKOT, GUJARAT - 360024

SHIHORI

622. TANU MOTORS PVT LTD (--01), OPP. PANCHMUKHI HANUMAN TEMPLE, SHIHORI - DEESA HIGHWAY, SHIHORI, TA- KANKREJ, DIST- BANASKANTHA.385550 - 385550

SIDDHPUR

623. STARLINE CARS PVT LTD (--01), PLOT NO. 140-1285/7, SIDHPUR, TALUKA – VADGAM, DISTRICT – PATAN. - 384151

SIHOR

624. KATARIA AUTOMOBILES PRIVATE LIMITED (--01), SURVEY PLOT NO 338, PAKKI 1 SIHOR BHAVNAGAR RAJKOT HIGHWAY, - 364240

SINOR

625. RAVIRATNA MOTORS PVT LTD (--01), NEAR SEVGA CHOKDI, SEVGA DABHOI ROAD, AT AND POST SEGVA, TALUKA SINOR, DIST. VADODARA, PIN-391105, GUJARAT - 391105
PH :7227055065.

SITAPUR

626. STARLINE CARS PVT LTD (--01), SHOP NO. 2, RUDRA ARCADE, REVENUE SURVEY NO. 129, VITHLAPUR (SITAPUR) BECHARAJI – VIRAMGAM HIGHWAY, DIST. AHMEDABAD, PIN CODE: 382120 - 382120

SOJITRA

627. AMAR CARS PVT LTD (--01), RAMDEV ARCADE, OPP. BUS STATION, AT – SOJITRA, DIST. - ANAND GUJARAT PIN 387240. - 387240
PH :9662357557.

SONGADH

628. COMET MOTORS (A UNIT OF COMET CAR SALES & SERVICE PVT LTD) (--01), LAXMI PLAZA, SHOP NO. 21 & 22, SURAT DHULIYA HIGHWAY, TALUKA - SONGADH, DIST.-TAPI. - 384220
PH :9099916099.

SUPEDI

629. KATARIA AUTOMOBILES PRIVATE LIMITED (--01), SURVEY NO-482/7, PAIKI PLOT NO-18, MATRAVAD ROAD, GRAM-SUPEDI, DIST - RAJKOT - 360440
PH :9409497902.

SURAT

630. KIRAN MOTORS LIMITED (4001-40-01), SURAT-BARDOLI ROAD,DUMBHAL,NEAR PUNA JAKAT NAKA,SURAT - 395010
631. DHRU MOTORS (4002-40-01), JEEVAN GANGA NAGAR,NEAR JEEVAN JYOT THEATRE,UDHNA MAIN ROAD,SURAT - 394210
632. KIRAN MOTORS LIMITED (4001-40-02), PANDESARA,BAMROLI ROAD,SURAT - 395002
PH :9824603880.
633. KATARIA AUTOMOBILES PRIVATE LIMITED (4004-40-04), TP NO. 6, SURVEY NO. 317/2, FINAL PLOT NO. 39, OPP SMS GARDEN, NEAR VIP ROAD, VESU, SURAT -395007 - 395007
634. KATARIA AUTOMOBILES PRIVATE LIMITED (4004-40-05), KATARIA ARCADE,OPP. RAJHANS CINEMA,DUMAS ROAD, PIPLOD, SURAT - 395007
635. COMET MOTORS (A UNIT OF COMET CAR SALES & SERVICE PVT LTD) (4006-40-01), CHIKUWADI COMPLEX, GHB ROAD, PANDESARA, SURAT. - 394221
PH :9099915995.
636. KATARIA AUTOMOBILES PRIVATE LIMITED (4004-40-08), BLOCK NO.233, TP NO.8, OPP. SHREE LEKHA RESIDENCY, PALANPORE, ADAJAN, SURAT - 394310
PH :9924119020.
637. KIRAN MOTORS LIMITED (4005--01), PLOT NO. 443, FP NO. 26 MOJE PALGAM, ADAJAN, SURAT - 395009
638. AMAR CARS PVT LTD (4009--02), PLOT NO.10&11, SURVEY NO.7 & 9, SONARAS COMPOUND, NEAR DGVCL OFFICE, KARMNATH MAHADEV TEMPLE LANE, KAPODARA, VARACHHA ROAD, SURAT - 395006
PH :7069026512.
639. COMET MOTORS (A UNIT OF COMET CAR SALES & SERVICE PVT LTD) (4006-40-03), R. S. NO. 311, T. P. SCHEME-3, FINAL PLOT NO. 102/A, KATARGAM, SURAT, DISTRICT – SURAT, GUJARAT. - 395004
PH :9099916099.

640. DHRU MOTORS (4002-40-03), PLOT NO.54/A, LAXMINARAYAN LNDUSTRIAL ESTATE, UDHNA, SURAT-394210 - 394210
PH :9978900862.
641. KATARIA AUTOMOBILES PRIVATE LIMITED (4004-40-09), SR NO-465+476, PLOT NUMBER: -1-9 AND 13-23, GURU KRUPA SHOPPING, NRLAXMIBA
PARK SOCIETY, NH 8, KHOLWAD, KAMREJ, SURAT-394190. - 394190
642. DHRU MOTORS (4002-40-06), TP NO.59, FP NO. 148, SUB PLOT NO-2, NEAR D'MART, MADHURAM CIRCLE, DINDOLI, SURAT - 394210

SURENDERNAGAR

643. DREAM VEHICLES PVT LTD (--01), 261/P, OPP MARKETING YARD,GIDC AREA,WADHWAN CITY, SURENDERNAGAR - 363030
644. DREAM VEHICLES PVT LTD (--02), PLOT NO-504/B, GIDC PHASE-3, WADHWAN, SURENDRANAGAR, GUJARAT-363030 - 363030
PH :9227775724.

TALAJA

645. KATARIA AUTOMOBILES PRIVATE LIMITED (--01), SURVEY NO-168, DHANJIBHAI BALADHIYA NI VADI, NEAR
MAHUVA PALITANA CROSS ROAD, MAHUVA BHAVNAGAR HIGHWAY, TALAJA-364140. - 364140
PH :9316626475.

TALALA

646. PERFECT AUTO SERVICES (A DIVISION OF PERFECT RETREADS PVT LTD) (--01), SURVEY NO-55/9/1, PLOT NO-10, TALALA-VERAWAL HIGHWAY, AT-TALALA, DIST-GIR SOMNATH, 362150 - 362150
PH :8511147524.

TALOD

647. KIRAN MOTORS LIMITED (--01), SURVEY NO-168, NEAR BALAJI PARK, TALOD, TALUKA-TALOD, DIST-SABARKANTHA, PIN-383215 - 383215

TANKARA

648. ATUL MOTORS PVT LTD (--01), PLOT NO. 8/1, S. NO. 107, VILLAGE – JABALPUR, TALUKA – TANKARA, SUB DISTRICT – MORBI, DISTRICT – RAJKOT. - 363650

TARAPUR

649. AMAR CARS PVT LTD (--01), NEAR N K STEEL, TARAPUR ROAD, TARAPUR, DIST.-ANAND. - 388180
PH :9909960772.

THANGADH

650. DREAM VEHICLES PVT LTD (--01), NEAR GATE, OPP.RELIANCE PETROL PUMP, - 363530

THARAD

651. TANU MOTORS PVT LTD (--01), PLOT NO. 21 & 22, VAJEGADH, DEESA HIGHWAY, THARAD, DIST.-BANASKANTHA - 384220

THASARA

652. KATARIA AUTOMOBILES PRIVATE LIMITED (--01), PLOT NO 1 & 2, GIDC THASRA, BESIDES NARMADA VASAHAT, DAKORE THASRA ROAD, GUJARAT-388250 - 388250
PH :7984092780.

TILAKVADA

653. RAVIRATNA MOTORS PVT LTD (--01), SURVEY NO-157, VILLAGE- MOTI KAMSOLI, TALUKA-TILAKVADA, DIST-NARMADA, PIN-391120. - 391120

UMERGAON

654. KATARIA AUTOMOBILES PRIVATE LIMITED (--01), PLOT NO. 239, LORD COMPLEX, SHOP NO. B-9 AND B-10, UMERGAON, DISTRICT – VALSAD, GUJARAT. - 396170
PH :9624001794.

UMRETH

655. AMAR CARS PVT LTD (--01), R. S. NO. 30/2, NADIAD-DAKOR ROAD, UMRETH , DIST.ANAND, GUJARAT. - 388220
PH :9909960772.

UNA

656. PERFECT AUTO SERVICES (A DIVISION OF PERFECT RETREADS PVT LTD) (--01), SURVEY NO. 113, PLOT NO. 6, OPP. SWAMI VIVEKANAND VIDYALAYA, NEAR BANSIDHAR PETROL PUMP, BHAVNAGAR HIGHWAY, VAYAJPUR, UNA, DISTRICT – GIR SOMNATH, GUJARAT. - 362560

UNJHA

657. TANU MOTORS PVT LTD (--02), OPP. DHANA DAL FACTORY,MEHSANA PALANPUR HIGHWAY, UNJHA - 384170
PH :9727762079.

UPLETA

658. PERFECT AUTO SERVICES (A DIVISION OF PERFECT RETREADS PVT LTD) (--01), S. NO. 184/1, PLOT NO. 15-16, UPLETA, GUJARAT - 360490

VADGAM

659. VIMCO MOTORS PVT LTD (--01), _ SURVEY NO-177, BESIDE ESSAR PETROL PUMP, VADGAM – PALANPUR ROAD, VADGAM, DIST – BANASKANTHA, GUJARAT – 385410. - 385410
PH :8909953333.

VADNAGAR

660. VIMCO MOTORS PVT LTD (--01), SHILALEKH COMPLEX, BLOCK-D, SURVEY NO-2713, VADNAGAR-VISNAGAR HIGHWAY, NEAR FOOD PARADISE HOTEL, VADNAGAR, GUJARAT - 385355
PH :7016623842.

VADODARA

661. KIRAN MOTORS LIMITED (2201--01), 909/4,G.I.D.C.MAKARPURA,VADODARA - 390010
PH :9624472699.
662. KIRAN MOTORS LIMITED (2201--02), PLOT NO.160,SUB-I NUTAN GUJ.INDL.ESTATE,OLD CHHANI ROAD, VADODARA - 390002
PH :9824207889.
663. AMAR CARS PVT LTD (2203--01), GORWA ROAD,VARODARA,GUJARAT, - 390016
664. AMAR CARS PVT LTD (2203-22-02), KALA GHODA, OPP. KIRTI MANDIR, VADODARA, DIS: VADODARA, GUJARAT - 390001
PH :7211109952.
665. KATARIA AUTOMOBILES PRIVATE LIMITED (2204-22-01), 984/4,GIDC, OLD NH-8,MAKARPURA ROAD, VADODARA, GUJARAT - 390010
PH :9904033422.
666. AMAR CARS PVT LTD (2205-22-01), VARASIYA AIRPORT ROAD, OPP POONAM CINEMA, KARELIBAUG, VADODARA,GUJARAT - 390016
PH :8980006756.
667. KIRAN MOTORS LIMITED (2201--03), C/O ARBUDA COLD STORAGE, 823 POWER CABLE ROAD, DHARMSINH ROAD, OPP. UMA AMAR PARTY PLOT, NEAR CHHANI JAKAT NAKA, VADODARA - 390002
PH :2771122.
668. KATARIA AUTOMOBILES PRIVATE LIMITED (2204-22-02), OPPOSITE SHARDA MANDIR HIGH SCHOOL, VINOBA BHAVE ROAD, SALATWADA, VADODARA - 390001
PH :8156017770.
669. RAVIRATNA MOTORS PVT LTD (2206-22-01), SURVEY NO. 1581, MILES HOUSE, ATLADARA ROAD, VADODARA. - 390012
670. KATARIA AUTOMOBILES PRIVATE LIMITED (2204-22-03), C/O SHIVAM TIMBER MART, BESIDES SIDDESHWAR PLAZA,NEAR SARDAR ESTATE, NEW VIP ROAD, VADODARA -390019. - 390019
671. KATARIA AUTOMOBILES PRIVATE LIMITED (2204-22-04), OPP. RUDRAKSH BLISS, RANG VATIKA ROAD, BAPOD, WAGHODIA - 390019
672. RAVIRATNA MOTORS PVT LTD (--02), SURVEY NO 560, BEHIND IOCL PETROL PUMP,, VILLAGE-VEMALI (SAMA), SAMA-SAVLI ROAD - 682024

VALETVA

673. AMAR CARS PVT LTD (--01), SHAH ALKABEN JITENDRA KUMAR, VALETVA CHOWKI, NEAR VISAT MATA MANDIR, PADGOL ROAD, VALETVA, DIST- KHEDA, GUJARAT - 388440

VALIA

674. RAVIRATNA MOTORS PVT LTD (--01), AT & PO VALIA, TA-VALIA, DIST. BHARUCH, VALIA - 393135

VALOD

675. DHRU MOTORS (--01), PLOT NO.5 TO 9, TAIYABA PARK SOCIETY, AT & PO - VALOD, TALUKA - VALOD, DISTT. - TAPI, GUJARAT. - 394640
PH :9712984522.

VALSAD

676. KATARIA AUTOMOBILES PRIVATE LIMITED (--06), SURVEY NO. 211,ATUL-ALSAD ROAD,PARNERA,AVALSAD, GUJARAT - 396020
677. AMAR CARS PVT LTD (9701-97-02), NEAR KALPANA WEIGH BRIDGE, OPP. VISHWAKARMA MANDIR, DHAMDACHI - 396001

VANSDA

678. KATARIA AUTOMOBILES PRIVATE LIMITED (--02), JAMNABA PARK, VANSDA HANUMAN BARI CHAR RASTA, VANSDA-DHARAMPUR ROAD, RANI FALIYA, VANSDA, DISTRICT – NAVSARI, GUJARAT - 396580
PH :7624088188.

VAPI

679. KATARIA AUTOMOBILES PRIVATE LIMITED (-97-03), PLOT NO. C-29,NATIONAL HIGHWAY-8,G. I. D. C., VAPI, TAL. PARDI - 396195
680. KATARIA AUTOMOBILES PRIVATE LIMITED (-97-09), PLOT NO. 304/2, VILLAGE BALITHA, NH-8, OPP BABA SITARAM TEMPLE, NEAR SWAMINARAYAN SCHOOL, SALAV, VAPI , DISTRICT -VALSAD, GUJARAT - 369191
681. AMAR CARS PVT LTD (9701-97-01), SURVEY NO. 1034, 1035, NEAR WOODLAND HOTEL, NH-8, VILLAGE - BALITHA, VAPI. - 396145
PH :9327909504.

VASO

682. KATARIA AUTOMOBILES PRIVATE LIMITED (--01), SURVEY NO -8, NEAR MADHURAM FARMHOUSE, MAUJA-VASO, DIST-KHEDA, GUJARAT - 387380

VERAVAL

683. PERFECT AUTO SERVICES (A DIVISION OF PERFECT RETREADS PVT LTD) (5502--05), SR.988/2/P1/P1, AT VILLAGE-DARI, TALUKA - PATAN, JUNGADH VERAWAL HIGHWAY, CHATRODA CHOWK, VERAVAL - 362255

VIJAPUR

684. STARLINE CARS PVT LTD (--04), HIMMATNAGAR HIGHWAY, ANANDPURA CHAR RASTA, VIJAPUR - 382870
PH :9909043635.

VIRAMGAM

685. KIRAN MOTORS LIMITED (--01), SURVEY NO.319/P, NILKI CHOKDI, VIRAMGAM, DISTT: AHMEDABAD, GUJARAT. - 382150
PH :8156016222.

VISAVADAR

686. PERFECT AUTO SERVICES (A DIVISION OF PERFECT RETREADS PVT LTD) (--01), OPP BUS STAND, AT PO-MANDAVAD, TAL-VISAVADAR, DIST-JUNAGADH, PIN-362130. - 362130

VISNAGAR

687. STARLINE CARS PVT LTD (--05), VISNAGAR -AMBAJI ROAD, OPP. DHAROI COLONY, VISNAGAR, DISTT.- MEHSANA - 384315
PH :7046046174.

VYARA

688. COMET MOTORS (A UNIT OF COMET CAR SALES & SERVICE PVT LTD) (--01), SHOP NO. 11 & 12, BLOCK NO. 175/1/A, RS NO. 113, VYARA-SURAT ROAD, VYARA, DISTRICT – TAPI, GUJARAT - 394650
PH :9099916099.

WAGHODIA

689. KATARIA AUTOMOBILES PRIVATE LIMITED (--01), OPPOSITE BHARAT PETROLEUM, WAGHODIA, TALUKA – WAGHODIA, DISTRICT – VADODARA, GUJARAT. - 391760
PH :7203013712.

WANKANER

690. ATUL MOTORS PVT LTD (--01), RAJKOT-WANKANER HIGHWAY, NEAR JADESHWAR CHAMBERS, NEAR INTERNATIONAL CERAMIC, WANKANER (GUJARAT) - 363621

HARYANA

ADAMPUR (HARYANA)

691. SARAOGI AUTOMOBILES PVT LTD (--01), KEWAT NO. 663, KHAT NO. 1147, KHESRI NO. 44/21/1/2(1-0), MANDI ADAMPUR, TEHSIL - ADAMPUR, DIST.-HISSAR, STATE - HARYANA. - 125052
PH :8607777153.

AMBALA

692. MODERN AUTOMOBILES (1801-18-01), MODEL TOWN CROSSING, G.T.ROAD, AMBALA, HARYANA. - 134003
PH :9215016044.

693. MODERN AUTOMOBILES (1801-18-02), NEAR AMAR PALI RESTAURANT, G.T. ROAD, AMBALA - 134003
PH :9215016044.

694. EAKANSH WHEELS PVT LTD (1802-18-01), STONE NO. 126, JAGADARI ROAD, VILLAGE TEPLA, AMBALA - 133001
PH :9991703000.

695. EAKANSH WHEELS PVT LTD (1802-18-03), PLOT NO. 8, BASANT VIHAR, BEHIND SWASTIK MARBLE, NEAR MOTOR MARKET, AMBALA CITY, HARYANA - 133001
PH :88813874888.

696. T R SAWHNEY MOTORS PVT LTD (1803-18-01), JAGGI GARDEN, BALDEV NAGAR, OPPOSITE AMBALA PASSPORT OFFICE, AMBALA - 134003
PH :9990110068.

ASSANDH

697. KARNAL MOTORS PVT LTD (8906--04), OPP. NEW GRAIN MARKET, KARNAL ROAD ASSANDH, DISTT. KARNAL - 272032
PH :7082111325.

BABARPUR

698. AUTOGALLERY (A UNIT OF RKH AUTOMOBILES PVT LTD) (--01), G.T. ROAD, NEAR PARK RESIDENCY, SHIMLA MAULANA, BADOLI, BABARPUR, DISTT. PANIPAT - 132103

BAHADURGARH

699. COMPETENT AUTOMOBILES CO LTD (--01), PLOT NO. 1202, MIE PART B, BAHADURGARH, HARYANA - 124507
PH :8929648144.

BAPOLI

700. AUTOGALLERY (A UNIT OF RKH AUTOMOBILES PVT LTD) (--01), KHEWAT NO. 136, VILLAGE – JHAMBA, TEHSIL – BAPOLI, DISTRICT – PANIPAT. - 132103
PH :9053400583.

BARARA

701. EAKANSH WHEELS PVT LTD (--01), SH-4, KALA AMB - SHAHBAD - BARARA ROAD, BARARA - 133201
PH :9991478100.

BARWALA

702. MODERN AUTOMOBILES (--01), KHEWAT/KHOTONI NO. 388, KHASARA NO. 46/9, 10, OPPOSITE AXIS BANK, VILLAGE BATAPUR, P.O. BARWALA, TEHSIL AND DISTT. PANCHKULA, HARYANA - 134118
PH :9896217059.

BAWAL

703. DINCO 4 WHEELS LLP (AUTO VIBES) (--01), KHATA NO. 326 AND KHATAUNI NO. 362, OPPOSITE PRATHAM HOUSING, NH-8, BAWAL, DISTRICT – REWARI, HARYANA . - 123501
PH :7082100250.

BERI

704. COMPETENT AUTOMOBILES CO LTD (--01), KHASRA NO.9/19,KEWAT NO.320, BERI JHAJJAR ROAD,WAZIRPUR, - 124201

BHIWANI

705. JAGMOHAN AUTOMOTIVES PVT LTD (--01), DELHI ROHTAK ROAD, NEAR RADHA SWAMI SATSANG MANDIR, BHIWANI - 127021
PH :8685005592.

BILASPUR

706. PLATINUM MOTOCORP LLP (--02), KHASRA NO.54/67, CHOUDHARY NIHAL SINGH MARKET, BILASPUR CHOWK, NH-8, BILASPUR, DISTRICT – GURUGRAM. - 122413

BILASPUR-HR

707. PANDIT AUTOMOBILES PVT LTD (--01), NEAR GRAMIN BANK, JAGADHRI ROAD, BILASPUR, DISTRICT – YAMUNANAGAR, HARYANA. - 135102
PH :9992113854.

CHARKHI DADRI

708. JAGMOHAN AUTOMOTIVES PVT LTD (--02), BHIWANI LOHARU ROAD, CHARKHI DADRI, BHIWANI - 127306
PH :8059900538.

CHEEKA

709. EAKANSH MOTORS PVT LTD (--04), MARBLE MARKET, PATIALA ROAD, CHEEKA, HARYANA, - 136034
PH :8053086000.

CHHACHHARAULI

710. PANDIT AUTOMOBILES PVT LTD (--01), HB NO. 311, NEAR MDAV SCHOOL, TEHSIL – CHHACHHRAULI, DISTRICT – YAMUNA NAGAR. - 135103
PH :9812455895.

DADRI TOE

711. COMPETENT AUTOMOBILES CO LTD (--01), KHEWAT NO. – 270 MIN, KHATONI NO. – 319, DADRI TOYE, DISTT. JHAJJAR, HARYANA PIN 124103 - 124103
PH :9821308849.

DAHINA

712. DINCO 4 WHEELS LLP (AUTO VIBES) (--01), REWARI MAHENDERGARH ROAD, NEAR RAILWAY STATION, DAHINA, REWARI - 123411
PH :7082100201.

DHAND

713. EAKANSH MOTORS PVT LTD (--01), PANCHMUKHI CHOWK, KARNAL ROAD, DHAND, DISTT. KAITHAL, HARYANA. - 136020
PH :8395906111.

DHARUHERA

714. DINCO 4 WHEELS LLP (AUTO VIBES) (--01), KHASRA NO. 57, KILLA NO. 7, SOHNA-DHARUHERA ROAD, OFF SECTOR-4A, DHARUHERA, DIST.-REWARI. - 122106
PH :7082100270.

ELLENABAD

715. SHAKTI MOTORS PVT LTD (--03), SURERA CHOWNK, NEAR CHAUDHARI MANI RAM COLLEGE, SIRSA ROAD, ELLENABAD - 125055
PH :8222900250.

FARIDABAD

716. VIPUL MOTORS PVT LTD (5801-58-01), 27/5 KM, MAIN MATHURA ROAD, FARIDABAD - 121002

717. VIPUL MOTORS PVT LTD (5801-58-03), UNIT-II, PLOT NO. 1A 19/6, MATHURA ROAD, FARIDABAD - 121006

718. TCS AUTOWORLD (A UNIT OF TCS & ASSOCIATES PVT LTD) (5804-58-01), PLOT NO-1A, SECTOR-6, FARIDABAD, - 121001

719. FAIR DEAL PREMIUM WHEELS PVT LTD (5807-58-01), PLOT NO.-17A, NIT INDUSTRIAL AREA, NIT FARIDABAD - 121003
PH :8448296686.

720. TCS AUTOWORLD (A UNIT OF TCS & ASSOCIATES PVT LTD) (5804-58-02), 20.4 KMS MILESTONE, BHASKAR COMPOUND, AMAR NAGAR, MAIN MATHURA ROAD, FARIDABAD, HARYANA. - 121003

721. AUTO NATION (A UNIT OF TAYAL INDIA MOTORS PVT LTD) (5806--01), 15/3, MATHURA ROAD, NEAR SECTOR-28, METRO STATION, FARIDABAD - 121003

722. AUTO NATION (A UNIT OF TAYAL INDIA MOTORS PVT LTD) (5806-58-02), BYE PASS ROAD, PLOT NO. 12 SECTOR-9, FARIDABAD. - 121006

723. AUTO NATION (A UNIT OF TAYAL INDIA MOTORS PVT LTD) (5806-58-03), 15-INDRA COMPLEX, NAHAR PAR NEAR SIDDHARTHA SCHOOL, FARIDABAD, KHERIKALANM PIN-121002, HARYANA - 121002

FARMANA

724. JAGMOHAN AUTOMOTIVES PVT LTD (--01), NEAR PARAMOUNT SCHOOL OF SCIENCE, KHARKHODA ROAD, FARMANA, DISTRICT SONIPAT, HARYANA - 131408

FARRUKHNAGAR

725. PLATINUM MOTOCORP LLP (--01), KHEVAT NO. 299, MUSTIL NO.-12, KHASRA NO.-19/3 AND 22/2, VILLAGE – SEHADPUR MOHAMADPUR, TEHSIL – FARRUKHNAGAR, DISTRICT – GURGAON. - 122506

FATEHABAD

726. SHAKTI MOTORS PVT LTD (--01), NH-10, SIRSA ROAD, FATEHABAD - 125050
PH :8222900217.

FEROZEPUR JHIRKA

727. PASCO AUTOMOBILES (--01), VILLAGE - CHAK RANGLA, TEHSIL - FIROZPUR JHIRKA DIST - NUH - 122104

GANAUR

728. JAGMOHAN AUTOMOTIVES PVT LTD (--01), SAROJ GARDEN, GT ROAD, GANNAUR , DISTRICT SONIPAT
RAILWAY ROAD, GANAUR - 131101
PH :8199911106.

GHARAUNDA

729. KARNAL MOTORS PVT LTD (8906--05), WARD NO.-1, BEHIND GOVT. SR. SEC. SCHOOL COLONY, GHARAUNDA, - 132114
PH :8222022321.

GOHANA

730. JAGMOHAN AUTOMOTIVES PVT LTD (--01), NEAR KHANPUR CHOWNK, ROHTAK PANIPAT HIGHWAY, GOHANA, DISTT. - SONEPAT - 131301
PH :8685005521.

GURGAON

731. PASCO AUTOMOBILES (9506-95-01), PASCO HOUSE, 6 PALAM GURGAON ROAD, INDUSTRIAL ESTATE, GURGAON - 122006
732. VIPUL MOTORS PVT LTD (5801-95-02), 504, UDYOG VIHAR, PHASE-III, GURGAON - 122001
733. COMPETENT AUTOMOBILES CO LTD (9505-95-01), A-25, INFOCITY, SECTOR-33, GURGAON - 122004
734. PASCO AUTOMOBILES (9506-95-02), SECTOR 17-18, DIVIDER ROAD, GURGAON, HARYANA, - 122015
735. ROHAN MOTORS LTD (9508-95-01), 2482/84, SECTOR-52A, WAZIRABAD VILLAGE, OPP. AARDI CITY MALL, GURGAON - 122001
736. VIPUL MOTORS PVT LTD (5801--04), PLOT NO.5/22/1, SARHAUL VILLAGE,SECTOR-18, MAIN ROAD, GURGAON. (HARYANA) - 201102
737. PREM MOTORS PVT LTD (9511-95-01), PLOT NO.101, SAINI PLAZA MARKET, OPP. H BLOCK, NEAR RAM MANDIR, PALAM VIHAR, GURGAON - 122017
738. PREM MOTORS PVT LTD (9512-95-01), PLOT NO. 3,IDC, OPPOSITE SECTOR-14, GURGAON - 122001
739. RANA MOTORS PVT LTD (9509-95-02), PLOT NO.60, IDC, GURGAON - 122001
740. PASCO AUTOMOBILES (9510-95-01), PLOT NO. 34/3, DINESH JAIN COMPLEX, DELHI-AJMER EXPRESSWAY (NH-8), RAJIV CHOWK, GURGAON, HARYANA. - 122001
741. PREM MOTORS PVT LTD (9512-95-02), PLOT NO. 122, PALAM VIHAR EXTENSION, NEAR KRISHNA CHOWK, GURUGRAM - 122017
742. PLATINUM MOTOCORP LLP (--03), 5/13 SOHNA ROAD VILL-TIKRI ADJACENT TO POLARIS HOSPITAL GURGAON HARYANA - 122018
743. PREM MOTORS PVT LTD (9512-95-G1), QILA NUMBER 8/2, MUSTAKIL NO - 25, SECTOR 17-18, DIVIDING ROAD, GURGAON, - 122015
PH :8800000817.
744. PLATINUM MOTOCORP LLP (-95-04), KILA NO. 15, SECTOR 93, NEAR HAYATPUR POLICE CHOWKI, HAYATPUR, GURGAON, PIN-122050, HARYANA - 122050
PH :9899118850.
745. PASCO AUTOMOBILES (9506-95-04), KHASRA NO. 191/2 & 190/2, MAIN DAULTABAD ROAD, OPP. OLD BHALLA CHEMICALS FACTORY, DAULATABAD INDUSTRIAL AREA, GURGAON, HARYANA - 122006. - 122006
PH :8851227233.
746. SWASTIK MOTOCORP PVT LTD (9514-95-01), NEAR RAO JAI SINGH CHOWK, SIKANDERPUR BADHA, SECTOR-85, GURUGRAM, HARYANA - 122004. - 122004
747. COMPETENT AUTOMOBILES CO LTD (9505-95-02), MAIN FARUKH NAGAR ROAD, DHANKOT, GURGAON - 122505 - 122505
748. PREM MOTORS PVT LTD (9512-95-03), OPP. TRUE VALUE, SECTOR 17-18 DIVIDING ROAD GURGAON - 122001
749. SWASTIK MOTOCORP PVT LTD (9514-95-02), KHATA NO.141/146, KILA NO.16/2/2, SECTOR-83, GURUGRAM, - 122004
750. SWASTIK MOTOCORP PVT LTD (9514-95-03), KHATAUNI NO 135, KHASRA/KILA NO 66/3/2/1 & 66/3/2/2, GURGAON- SOHNA RD, NEAR VATIKA CHOWK, GURUGRAM - 122101

HANSI

751. JAGMOHAN AUTOMOTIVES PVT LTD (--01), G. T. HIGHWAY ROAD, MAIN ROHTAK HANSI ROAD, NEAR HOLLAND TRACTORS AGENCY & HP PETROL, HANSI
ROHTAK ROAD, HANSI (HISAR), HARYANA. - 124001
PH :8059900546.

HATHIN

752. ROHAN MOTORS LTD. (--01), MAIN MARKET ROAD, WARD NO.13HATHIN,
PALWAL,,PIN-121103, - 121103

HISSAR

753. MODERN AUTOMOBILES (7602-76-01), OPP. VIDYUT NAGAR, DELHI ROAD, HISAR, - 125005
PH :9355473000.
754. SARAOGI AUTOMOBILES PVT LTD (7604-76-01), 5TH KM STONE, SIRSA ROAD, HISSAR, HARYANA - 125001
PH :8607777043.
755. MODERN AUTOMOBILES (7602-76-02), OPP. BBMB, HISSAR DELHI ROAD, HISSAR - 125001
PH :9355473000.
756. UNIQUE MOTORS PVT LTD (7603-76-01), OPP. BHANU INDUSTRIES, DELHI ROAD, VILLAGE: SATROD,HISSAR (HARYANA) - 125006
PH :8818055535.

HODAL

757. ROHAN MOTORS LTD (--02), KILA NO. 8/2(7-11), 9(5-06), 12(5-0), 13(8-0), HIGHWAY ROAD, NEAR RAILWAY BYEPASS CHOWK, TEHSIL - HODAL, DIST.-PALWAL. - 121106

ISMAILABAD

758. KARNAL MOTORS PVT LTD (--01), KHEWAT NO. 928, KHASRA NO. 2760(5-14), 2761(800), VILLAGE - ISMAILABAD, TEHSIL - PEHOW, DIST. -KURUKSHETRA, HARYANA. - 136129
PH :7082007138.

ISRANA

759. AUTOGALLERY (A UNIT OF RKH AUTOMOBILES PVT LTD) (--01), MUSHTIL NO.-119, NEAR MANDI MOD, MAIN GOHANA ROAD, ISRANA - 132107
PH :9053400417.

JASANA

760. AUTO NATION (A UNIT OF TAYAL INDIA MOTORS PVT LTD) (--01), MUSTKIL NO -06, KILL NO -22 VILLAGE, JASANA FARIDABAD HARYANA-121101 - 121101

JHAJJAR

761. COMPETENT AUTOMOBILES CO LTD (--01), PLOT NO 5, NEAR GOVT POLYTECHNIC COLLEGE, JHAJJAR-BAHADURGARH ROAD, JHAJJAR, HARYANA - 124101
PH :9999493040.

JIND

762. EAKANSH MOTORS PVT LTD (--01), ROHTAK ROAD, NATIONAL HIGHWAY-71, OPP. GRAIN MARKET, JIND, HARYANA - 126102
PH :7876008184.

JULANA

763. EAKANSH MOTORS PVT LTD (--01), PLOT NO. 52,53, KHEVAT NO. 253/3 ,ROHTAK ROAD, JULANA, DISTRICT JIND, HARYANA.
JIND ROHTAK MAIN ROAD, OPP. NEW BUS STAND, JULANA, DIST. JIND, HARYANA - 126101
PH :8816802111.

KAITHAL

764. EAKANSH MOTORS PVT LTD (--01), AMBALA ROAD, NH-65, KAITHAL - 136027
PH :9671788801.

KALANAUR

765. JAGMOHAN AUTOMOTIVES PVT LTD (--01), BHIWANI ROAD, KALANAUR, DISTRICT ROHTAK. - 124113
PH :9812000425.
766. PANDIT AUTOMOBILES PVT LTD (--01), VPO. KALANAUR, DISTRICT- YAMUNANAGAR, HARYANA - 124113
PH :9053055550.

KALAYAT

767. EAKANSH MOTORS PVT LTD (--01), NEAR BUS STAND, KAITHAL-KALAYAT ROAD, VILLLAGE-KALAYAT, DISTT. KAITHAL (HARYANA) - 136117
PH :9671788801.

KALKA

768. MODERN AUTOMOBILES (--01), ADJOINING INDIAN OIL PETROL PUMP, RAM NAGAR, NH-22, KALKA, DISTRICT – PANCHKULA, HARYANA - 133302
PH :9896217059.

KARNAL

769. KARNAL MOTORS PVT LTD (8906-89-01), 71/3 MILESTONE ,G.T.ROAD, KARNAL - 132001
PH :8222022399.
770. KARNAL MOTORS PVT LTD (8906-89-02), KHEWAT NO. 59, JHANJHARI GT ROAD, KARNAL - 132001
PH :8222022430.
771. MODERN AUTOMOBILES (8907-89-01), NEAR NAMASTE CHOWK, OLD G.T.ROAD, KARNAL - 132001
PH :7419900042.
772. MODERN AUTOMOBILES (8907-89-03), 117-118 KM MILE STONE NH1, NEAR VILLAGE KAMBOPURA, GT ROAD, KARNAL - 132001
PH :7419900042.

KATHURA

773. JAGMOHAN AUTOMOTIVES PVT LTD (--01), GOHANA MAHAM ROAD, KATHURA, GOHANA. - 131301
PH :8685005400.

KHARKHODA

774. JAGMOHAN AUTOMOTIVES PVT LTD (--01), NEAR KHANDA BYPASS CHOWK, SONIPAT ROAD, KHARKHODA, DISTRICT: SONIPAT, HARYANA - 131402
PH :8685005593.

KOSLI

775. DINCO 4 WHEELS LLP (AUTO VIBES) (--01), OPPOSITE RAJIV GANDHI STADIUM, TEHSIL ROAD KOSLI, DISTRICT – REWARI, HARYANA . - 123302
PH :7082100202.

KUND

776. DINCO 4 WHEELS LLP (AUTO VIBES) (--01), NEAR KUND BARRIER, OPP. SBI BANK, NARNAUL ROAD, VILLAGE - MANETHI, KUND, DISTRICT - REWARI, HARYANA . - 123102

KUNDLI

777. JAGMOHAN AUTOMOTIVES PVT LTD (--01), 34 E, SECTOR 57, PHASE 4 , KUNDLI INDUSTRIAL AREA, KUNDLI - 131001
PH :8059900518.

KURUKSHETRA

778. KARNAL MOTORS PVT LTD (8906--03), PLOT NO. 156, INDUSTRIAL AREA, SECTOR-2, KURUKSHETRA - 136118
PH :8222022371.

LADWA

779. KARNAL MOTORS PVT LTD (--01), KHEWAT NO.197, KHATONI NO.233, KHASRA NO.27/17/1,27/14, LADWA-KURUKSHETRA ROAD, VILLAGE - LADWA, TEHSIL THANESAR, DISTT. KURUKSHETRA - 136132
PH :7082007182.

LOHARU

780. JAGMOHAN AUTOMOTIVES PVT LTD (--01), BHIWANI ROAD , OPP. ITI, CITY: LOHARU - 127201
PH :9812000425.

MADLAUDA

781. AUTOGALLERY (A UNIT OF RKH AUTOMOBILES PVT LTD) (--01), VILLAGE-BHALSI, ASSANDH-PANIPAT ROAD, MADLAUDA, PIN-132113, HARYANA - 132113
PH :9053400524.

MAHENDARGARH

782. PLATINUM MOTOCORP LLP (--01), KHEWAT NO. 187, KILLA NO. 51/8, REVENUE ESTATE OF VILLAGE REWASA, DADRI ROAD, TEHSIL & DISTRICT, MAHINDERGARH, PIN-123029, HARYANA - 123029

MANDI DABWALI

783. SHAKTI MOTORS PVT LTD (--02), SANGARIA ROAD, DABWALI, DISTT.-SIRSA - 125104
PH :8222900209.

MANESAR

784. PLATINUM MOTOCORP LLP (--01), PLOT NO.282, SEC 6, IMT MANESAR DISTT. GURGAON. - 122052

MEHAM

785. JAGMOHAN AUTOMOTIVES PVT LTD (--08), MAIN MARKET, NATIONAL HIGHWAY-10, ROHTAK-HISSAR ROAD, MEHAM, DISTRICT-ROHTAK - 124101
PH :8059900592.

MOHNA

786. TCS AUTOWORLD (A UNIT OF TCS & ASSOCIATES PVT LTD) (--01), YAMUNA PUL ROAD , NEAR GYATRI PETROL PUMP , VPO-MOHANA,TEHSIL BALLABGARH , DISTT FARIDABAD - 121004

MUSTAFABAD

787. PANDIT AUTOMOBILES PVT LTD (--01), KHATUNI NO. 205/287, KHASRA NO. 39:17/2, VILLAGE - MANSURPUR, THANA - CHAPPER, MUSTAFABAD, DIST.-YAMUNA NAGAR, STATE - HARYANA. - 133103
PH :9992113854.

NARAINGARH

788. EAKANSH WHEELS PVT LTD (1802--02), NH-72, AMBALA-KALA AMB ROAD, NEAR ADARSH FILLING STATION, NARAINGARH - 134203
PH :9991143700.

NARNAUL

789. PLATINUM MOTOCORP LLP (--01), KAILASH NAGAR, REWARI ROAD, NARNAUL, HARYANA,

NARNAUND

790. JAGMOHAN AUTOMOTIVES PVT LTD (--01), KHASRA NO. 234, HANSI ROAD, NARNAUND, DISTT. HISAR, HARYANA. - 125039
PH :9812000471.

NARWANA

791. EAKANSH MOTORS PVT LTD (--03), OPP. HAFED GODOWN-2, NH-65 AKHERAM NAGAR, NARWANA - 126116
PH :9813583100.

NUH

792. PASCO AUTOMOBILES (--01), MAIN DELHI - ALWAR ROAD, NEAR SHAHEED PARK, NH -248A, NUH, DISTRICT - MEWAT, HARYANA. - 122107
PH :9810014947.

PALWAL

793. ROHAN MOTORS LTD (--01), SANWAL COLONY, MAIN MATHURA ROAD, NEAR SDM COURT, PALWAL - 121101

PANCHKULA

794. MODERN AUTOMOBILES (--03), PLOT NO. 318, INDUSTRIAL AREA, PHASE-2, PANCHKULA - 134113

795. AUTOPACE NETWORK PVT LTD (--03), PLOT NO. 5, INDUSTRIAL AREA, PHASE-1, PANCHKULA, HARYANA. - 134113

796. AUTO VOGUE PRIVATE LIMITED (--01), PLOT NO- 388, INDUSTRIAL AREA PHASE-1, PANCHKULA, HARYANA. - 134113
PH :8558813181.

PANIPAT

797. AUTOGALLERY (A UNIT OF RKH AUTOMOBILES PVT LTD) (--01), KHASRA NO. 43/6, 44/9 & 10, VILLAGE – JATTIPUR, NEAR HOTEL SWARNA MAHAL, NH-1, PANIPAT, HARYANA.
PH :9053400515.

PATAUDI

798. PLATINUM MOTOCORP LLP (--01), HALI MANDI ROAD, OPPOSITE SHIV MURTI, PATAUDI, DIST. - GURGAON - 122503

PEHOWA

799. KARNAL MOTORS PVT LTD (--01), NEAR DAV COLLEGE, AMBALA ROAD, PEHOWA. 136128 - 136128
PH :8222022464.

PUNDRI

800. EAKANSH MOTORS PVT LTD (--01), KAITHAL-KARNAL ROAD, OPP. ESSAR PETROL PUMP, PUNDRI, KAITHAL, HARYANA.
KILA NO- 3/10, KHEWAT 2147 OPP. HARCHARAN FILLING STATION, KAITHAL ROAD, PUNDRI DIST. KAITHAL, HARYANA - 136026
PH :9671788801.

PUNHANA

801. PASCO AUTOMOBILES (--01), KILA NO. 4/2, PUNHANA, DIST.-MEWAT, HARYANA - 122508

RADAUR

802. PANDIT AUTOMOBILES PVT LTD (--02), OPP. JMIT ENGG. COLLEGE, NEAR BUS STAND, RADAUR, DISTRICT-RADAUR, HARYANA - 135001
PH :9992113854.

RAIPUR RANI

803. AUTO VOGUE PRIVATE LIMITED (--01), BARWALA ROAD, RAIPUR RANI, DISTRICT PANCHKULA, HARYANA. PIN CODE – 134204. - 134204

RAJOUND

804. EAKANSH MOTORS PVT LTD (--01), MITTAL KHAL BHANDAR, RAJOUND, DISTT KAITHAL
PH :9671788801.

REWARI

805. DINCO 4 WHEELS LLP (AUTO VIBES) (--01), BAWAL ROAD, NEAR BYE PASS ROAD, REWARI (HARYANA)) - 123401

ROHTAK

806. JAGMOHAN AUTOMOTIVES PVT LTD (--01), SONEPAT ROAD, ROHTAK - 124001
PH :9467465035.

807. JAGMOHAN AUTOMOTIVES PVT LTD (--09), SWAN GARDEN, DELHI ROAD, ROHTAK - 124001
PH :9812000357.

808. UNIQUE AUTOLEAD LLP (--01), KHASRA NO-3597 JIND ROAD, JIND CHOWK, ROHTAK, HARYANA - 124001
PH :9812259000.

SAFIDON

809. EAKANSH MOTORS PVT LTD (--05), NEAR BRSK SCHOOL , OPPOSITE RELIANCE PETROL PUMP, PANIPAT ROAD, SAFFIDON, DISTRICT-JIND - 126112
PH :9416616603.

SALHAWAS

810. COMPETENT AUTOMOBILES CO LTD (--01), JHAJJAR KOLSI ROAD, NEAR BDPO OFFICE, SALHAWAS, DISTT JHAJJAR HARYANA - 123106 - 123106

SAMALKHA

811. AUTOGALLERY (A UNIT OF RKH AUTOMOBILES PVT LTD) (--01), GT ROAD, SAMALKHA, PANIPAT, HARYANA PIN- 132101 - 132101
PH :9053700003.

SAMPLA

812. JAGMOHAN AUTOMOTIVES PVT LTD (--01), NEAR VASUNDRA CAFÉ, DELHI ROHTAK ROAD, SAMPLA, DISTT. ROHTAK - 124501
PH :9812000351.

SATNALI

813. PLATINUM MOTOCORP LLP (--01), KHEVAT NO.605, KHATONI NO-1134 KILLA NO.167, VILL: SATNALI, NEAR BHARAT PETROL PUMP MAHENDRAGARH ROAD, HARYANA -123024 (LOCATION: MAHENDRAGARH) - 123024
PH :9910100341.

SHAHABAD

814. KARNAL MOTORS PVT LTD (--01), KHEWAT NO. 460, KATONI NO. 486, KHASRA NO. 170, TEHSIL - SHAHABAD, DIST.- KURUKSHETRA. - 136135
PH :8222022338.

SIRSA

815. SHAKTI MOTORS PVT LTD (--01), DABBALI RD., SIRSA, HARYANA - 125055
PH :8222900201.

SIWANI

816. SARAOGI AUTOMOBILES PVT LTD (--01), OPP.GOVT HOSPITAL ,SIWANI BYPASS CHOWK,HISSAR ROAD ,SIWANI,DIST.BHIWANI -127046 HARYANA - 127046
PH :8607777149.

SOHNA

817. PASCO AUTOMOBILES (9506--03), 56, KILLA NO. 13 (4-10), 18(4-6), 19 (8-0), 22 (8-0), 23 (4-2), VILLAGE - ALIPUR, SOHNA GURUGRAM ROAD, TEHSIL - SOHNA , DISTRICT -GURUGRAM. - 122103

818. COMPETENT AUTOMOBILES CO LTD (--03), DAULA-197, LOHATKI VILLAGE, KHASRA NO.174, SOHNA ROAD, GURGAON, PIN-122103, HARYANA - 122103

SONEPAT

819. JAGMOHAN AUTOMOTIVES PVT LTD (--01), BAHALGARH-DELHI ROAD, OPP. POWER HOUSE, SONIPAT - 131001
PH :9992200372.

820. JAGMOHAN AUTOMOTIVES PVT LTD (--02), GAYATRI GARDEN, MURTHAL ROAD, SONEPAT (HARYANA) - 131001
PH :8685005686.

821. JAGMOHAN AUTOMOTIVES PVT LTD (--03), O-11 INDUSTRIAL AREA, SONIPAT, HARYANA. - 131001
PH :9812615000.

TAURU

822. PASCO AUTOMOBILES (--01), KILA NO. 34/1/2, REWARI ROAD, TAURU, DIST.-MEWAT, HARYANA. - 122015

TOHANA

823. SHAKTI MOTORS PVT LTD (--01), NEAR GREEN VALLEY PUBLIC SCHOOL, RATIA ROAD, TOHANA - 125120
PH :8572800991.

TOSHAM

824. JAGMOHAN AUTOMOTIVES PVT LTD (--01), BHIWANI ROAD, TEH. TOSHAM, DIST. BHIWANI. - 127040
PH :8059900566.

YAMUNANAGAR

825. PANDIT AUTOMOBILES PVT LTD (--01), GOVINDPURI ROAD, JAGADRI, YAMUNANAGAR - 135001
PH :9812455896.

826. PANDIT AUTOMOBILES PVT LTD (--03), PLOT NO.E-8, INDUSTRIAL AREA, ITI ROAD, YAMUNA NAGAR (HARYANA) - 135001
PH :9812455896.

HIMACHAL PRADESH

ALAMPUR

827. KANGRA VEHICLEADES (A UNIT OF PATHANKOT VEHICLEADES PVT LTD) (--01), KHASRA NO. 1606/1582, STATE HIGHWAY PALAMPUR-SUJANPUR AT JANGAL, VILLAGE - ALAMPUR, DIST.-KANGRA. - 176082

BADDI

828. GOYAL MOTORS PVT LTD (--04), KHATA/KHATAUNI NO. 26/26, KHASRA NO. 93/56/32 AND 94/56/32, KITAS 2, REVENUE MAUZA – CHAK JANGI, HADBAST NO. 203, TEHSIL – BADDI, DISTRICT – SOLAN, HIMACHAL PRADESH. - 173205
PH :9418076972.

BAIJNATH

829. KANGRA VEHICLEADES (A UNIT OF PATHANKOT VEHICLEADES PVT LTD) (--01), TASHI JONG, PAPROLA-BAIJNATH, NH-20, KANGRA -MANDI ROAD, TEHSIL BAIJNATH, DISTT. KANGRA - 176115

BANGANA

830. COMPETENT AUTOMOBILES CO LTD (--01), VILLAGE BHALET, POST OFFICE DOHGI, TEHSIL BANGANA, DISTT UNA, HIMACHAL PRADESH - 174307

BANIKHET

831. PATHANKOT VEHICLEADES PVT LTD (--01), KHASRA NO.709, KHATA KHATOONI NO.23, BANIKHET, THE-DALHOUSIE, DISTT. CHAMBA - 176303

BILASPUR-HP

832. COMPETENT AUTOMOBILES CO LTD (--01), KHEWAT NO. 8/8 KHATAUNI, KHASRA NO. 137/30, 31, MAUZA KOTHI, PARGANA 9, P. O. – CHANDPUR, TEHSIL – SADAR, DIST.- BILASPUR, HIMACHAL PRADESH. - 174001

CHAMBA

833. PATHANKOT VEHICLEADES PVT LTD (--01), MOHALLA SULTANPUR, BALU BRIDGE, CHAMBA - 176310

834. PATHANKOT VEHICLEADES PVT LTD (--02), KHASRA NO. 88/96,1 & KHASRA NO.628/276, VILLAGE & PO SAROO, THE. & DISTT. CHAMBA, HIMACHAL PRADESH. - 176310

CHOWARI

835. PATHANKOT VEHICLEADES PVT LTD (--01), KHATA KHATNI NO. 24/32 MIN, KHASRA NO. 90, VILLAGE - LAHRU, P.O. - PARCHHORE, TEHSIL - BHATTIYAT, DIST.-CHAMBA, HAMACHAL PRADESH. - 144416
PH :8894569632.

DARLAGHAT

836. GOYAL MOTORS PVT LTD (--01), VILL SYAR, , PO DARLAGHAT,TEH ARKI, HIMACHAL PRADESH - 171102

DEHRA

837. KANGRA VEHICLEADES (A UNIT OF PATHANKOT VEHICLEADES PVT LTD) (--02), VILLAGE & P.O. SUNHET, TEHSIL DEHRA, DIST. KANGRA - 177101
PH :9817013058.

GAGGAL

838. KANGRA VEHICLEADES (A UNIT OF PATHANKOT VEHICLEADES PVT LTD) (--01), NATIONAL HIGHWAY -20 , ZAMANABAD ROAD, ICHHI, GAGGAL, DISTT. KANGRA , HIMACHAL PRADESH - 176209
PH :9418988832.

GAGRET

839. COMPETENT AUTOMOBILES CO LTD (--01), HOSHIARPUR ROAD, OPP. HPSEB OFFICE, GAGRET, DISTRICT UNA, HIMACHAL PRADESH - 177021

GHUMARWIN

840. COMPETENT AUTOMOBILES CO LTD (--01), WARD NO 6, KHASRO NO 1619KHEWAT NO 129/148, ABDHANIGHAT VILLAGE - 174021

HAMIRPUR

841. COMPETENT AUTOMOBILES CO LTD (--01), VILLAGE TIKKAR, P.O DIDWIN TEHSIL & DISTT, HAMIRPUR - 177401
PH :9805510276.

INDORA

842. PATHANKOT VEHICLEADES PVT LTD (--01), VILLAGE CHANDOR, PO & TEHSIL INDORA, DISTT. KANGRA, PIN-176401, HIMACHAL PRADESH - 176401
PH :9418008627.

JAISINGHPUR

843. KANGRA VEHICLEADES (A UNIT OF PATHANKOT VEHICLEADES PVT LTD) (--01), HARSI PATTAN ROAD, OPP. SABJI MANDI, TEHSIL – JAISINGHPUR, DIST. – KANGRA, HIMACHAL PRADESH. - 176095

JASWAN

844. KANGRA VEHICLEADES (A UNIT OF PATHANKOT VEHICLEADES PVT LTD) (--01), JASWAN, KANGRA, HIMACHAL PRADESH. - 221502

JAWALI

845. PATHANKOT VEHICLEADES PVT LTD (--01), VILLAGE - TIUKARI, NEAR MAHAVIR HOSPITAL LUBH ROAD, TEHSIL - JAWALI, DIST.-KANGRA, HAMACHAL PRADESH. - 176023
PH :9418195333.

JHANDUTTA

846. COMPETENT AUTOMOBILES CO LTD (--01), BEHRAN,TEHSIL JHANDUTTA, DISTRICT BILASPUR H.P. - 174031

JOGINDER NAGAR

847. COMPETENT AUTOMOBILES CO LTD (--01), VILL. DHELU PO DOHAG, JOGINDER NAGAR (H.P.) - 175015
PH :9805005754.

JWALAMUKHI

848. KANGRA VEHICLEADES (A UNIT OF PATHANKOT VEHICLEADES PVT LTD) (--01), KHASRA 880/613, MAUJA BOHAN, TEHSIL JWALAMUKHI, DISTRICT KANGRA - 176031
PH :9418488999.

KULLU

849. COMPETENT AUTOMOBILES CO LTD (--01), PLOT 3&4, INDUSTRIAL AREA, SHAMSHI, KULLU (HP) - 175126
PH :7018035136.

KUNIHAR

850. GOYAL MOTORS PVT LTD (--01), KHATA NO. – 77, VILLAGE KOTHI, P.O. KUNNIHAR, TEHSHIL – ARKI, DISTRICT – SOLAN, HIMACHAL PRADESH - 173207
PH :9418312472.

MANALI

851. COMPETENT AUTOMOBILES CO LTD (--01), VILL. CHOURI VIHAR (AALU GROUND), P.O. & THESIL- MANALI, DIST. KULLU, (H.P.) - 175131
PH :9418387465.

MANDI

852. COMPETENT AUTOMOBILES CO LTD (--01), GUTKAR INDUSTRIAL AREA, DELHI MANDI ROAD, N.H.21 GUTKAR, MANDI - 124501

MATIANA

853. GOYAL MOTORS PVT LTD (---), VPO MATIANA (NEAR DEV BHOOMI APPLE COLD STORAGE),THEOG ,SHIMLA, HIMACHAL PRADESH-171212. - 171212

NADAUN

854. COMPETENT AUTOMOBILES CO LTD (--01), VILLAGE JALAN, KHASRA NO.183, PO & TEHSIL NADAUN, DISTT. HAMIRPUR, HIMACHAL PRADESH - 177041
PH :9805737436.

NAGROTA

855. KANGRA VEHICLEADES (A UNIT OF PATHANKOT VEHICLEADES PVT LTD) (--01), MALAN, NAGROTA - BAGWAN, KANGRA, H.P. - 176047
PH :7018268819.

856. KANGRA VEHICLEADES (A UNIT OF PATHANKOT VEHICLEADES PVT LTD) (--06), JHIKLI AMBARI, MOUZA AMBARI, MALAN, NAGROTA BAGWAN, TEHSIL & DISTT. KANGRA, HIMACHAL PRADESH - 176047
PH :7018268819.

NAGROTA SURIAN

857. KANGRA VEHICLEADES (A UNIT OF PATHANKOT VEHICLEADES PVT LTD) (--01), KHEWAT NO. 115, KHATAUNI NO. 127, KHASRA NO. 2037, MAHAL BASSA, SUB TEHSIL – NAGROTA SURIAN, DISTRICT – KANGRA. - 176027
PH :9418488999.

NALAGARH

858. GOYAL MOTORS PVT LTD (--01), NEAR HP PETROL PUMP, VILLAGE PEERSTHAN, P.O & TEHSIL NALAGARH, DISTT. SOLAN (H.P.) - 174101
PH :9418704572.

NERWA

859. GOYAL MOTORS PVT LTD (--01), KHASRA NO. 482, VILLAGE – KEDI, TEHSIL – NERWA, DISTRICT – SHIMLA, HIMACHAL PRADESH. - 171210
PH :9418663572.

NURPUR

860. PATHANKOT VEHICLEADES PVT LTD (--01), VILLAGE JACHH, PO JASSUR, TEHSIL NURPUR, DISTT. KANGRA - 176201

861. PATHANKOT VEHICLEADES PVT LTD (--02), VILL- NANGLAHAR, PO-RAJA KA BAG, TEH - NURPUR, KANGRA - 176201

PALAMPUR

862. KANGRA VEHICLEADES (A UNIT OF PATHANKOT VEHICLEADES PVT LTD) (--01), NEAR IOCL PUMP, KANGRA MANDI ROAD, PALAMPUR, DISTT. KANGRA, HIMACHAL PRADESH. - 176061

PAONTA SAHIB

863. GOYAL MOTORS PVT LTD (--02), OPP BIBIJEET KAUR SENIOR SECONDARY SCHOOL, SHAMSHERPUR , NH-72, PAONTA SAHIB - 173025
PH :9459210872.

RAJGARH

864. GOYAL MOTORS PVT LTD (--01), KHATA NO. 517/505, 478/3, KHASRA NO. – 38/98 VILLAGE NERI RATAULI, P.O. RAJGARH TEHSIL – RAJGARH, DISTRICT – SIRMAUR , HIMACHAL PRADESH - 173101
PH :9418312472.

RAMPUR

865. GOYAL MOTORS PVT LTD (--01), KHASRA NO. 824/825, MINN NO. 155/396, 163/411, NAGLI, ROHRU ROAD, RAMPUR, TEHSIL – RAMPUR, DISTRICT – SHIMLA. - 172001
PH :9459296572.

ROHRU

866. GOYAL MOTORS PVT LTD (--01), CHARGAON SHIMLA ROAD, ROHRU, DISTRICT -SHIMLA - 171207
PH :9418016072.

SALOONI

867. PATHANKOT VEHICLEADES PVT LTD (--01), KHASRA NO. 299/174, VILLAGE. MANJEER, TEHSIL-SALOONI, DISTT. CHAMBA, PIN-176320, HIMACHAL PRADESH - 176320
PH :9418059252.

SARAHAN

868. GOYAL MOTORS PVT LTD (--01), KHATA KHATUNI NO. 686/623/591/451 VILLAGE TIKKAR (260), TEHSIL PACHAD, DISTT SIRMAUR (HP) - 173024

SHAHPUR

869. KANGRA VEHICLEADES (A UNIT OF PATHANKOT VEHICLEADES PVT LTD) (--01), VILLAGE MANJHGRAN, P.O. DRAMMAN, TEHSIL SHAHPUR, DISTT. KANGRA, HIMACHAL PRADESH - 176206
PH :9459900241.

SHIMLA

870. GOYAL MOTORS PVT LTD (--01), TARADEVI, SHIMLA,(H.P.) - 171010
PH :9418663572.

SOLAN

871. GOYAL MOTORS PVT LTD (--01), DEON GHAT, SOLAN - 173211
PH :9418138772.

UNA

872. COMPETENT AUTOMOBILES CO LTD (--01), VILLAGE RAINSARY,P.O JHALERA,TEHSIL & DISTRICT:UNA - 174303
PH :9805737436.

JAMMU AND KASHMIR

AKHNOOR

873. JAMMU MOTORS PRIVATE LIMITED (--01), MAIN ROAD DASKAL, TEHSIL – AKHNOOR, DISTRICT - JAMMU - 181201
PH :9419118393.

874. JAMMU MOTORS. PVT.LTD. (--02), MAIN ROAD DASKAL NEAR HANUMAN CHOWK, NEAR HANUMAN CHOWK AKHNOOR - 181201

BANDIPORA

875. JAMKASH VEHICLEADES PVT LTD (1205--04), AJAR BANDIPORA , J&K - 193502
PH :9149726427.

BARAMULLA

876. JAMKASH VEHICLEADES PVT LTD (--01), VILLAGE SANGRAMA,WAGAROO, BARAMULA - 193101
PH :7889612218.

BHADRAWAH

877. J&K VEHICLEADES PVT LTD (--01), KHASRA NO.2863, LOWER SUNGLI UNIVERSITY ROAD, BHADERWAH, DISTT. DODA, J&K - 182222

BHASOLI

878. JAMKASH VEHICLEADES PVT LTD (--01), ZERO MORTH, BASHOLI, DISTT. KATHUA, BASHOLI, PIN-184201, JAMMU & KASHMIR - 184201
PH :9018847230.

BUDGAM

879. HIGHLAND AUTOMOBILES PVT LTD (--04), KHASRA NO. 208 MIN, KHEWAT NO. 9 AND KHATTA NO. 55, MOUZA - PALLAR, TEHSIL AND DIST.-BUDGAM. - 191111
PH :9419019898.

CHOWKI CHOURA

880. JAMMU MOTORS PRIVATE LIMITED (--01), KHASRA NO. 37 MIN, ADJACENT TO J&K BANK, JAMMU POONCH HIGHWAY, CHOWKI CHOURA, JAMMU & KASHMIR - 185154
PH :9596975060.

DAYALACHAK

881. JAMKASH VEHICLEADES PVT LTD (--01), KHASRA NO. 183, KHEWAT NO.14, KHATANO-74, VILLAGE CHAK SAKTA, DAYALACHAK,TEHSIL & DISTT. KATHUA , JAMMU & KASHMIR - 184121
PH :88492849170.

DODA

882. J&K VEHICLEADES PVT LTD (--01), MINTO CAR CARE, AKHYARABAD, MAIN ROAD, DODA CITY, DODA (J&K) - 182202
PH :9419796821.

GANDERBAL

883. JAMKASH VEHICLEADES PVT LTD (--01), MALSHAIE BAGH, GANDERBAL (J&K) - 191201
PH :9419000828.

HANDWARA

884. JAMKASH VEHICLEADES PVT LTD (--01), KHEWAT NO-31, KHATTA NO-298, SURVEY NO-3764/1816, MOZA BRARIPORA, TEH-HANDWARA, DIST- KUPWARA, J&K - 193221

HANJWARA PATTAN

885. JAMKASH VEHICLEADES PVT LTD (--01), NEAR LIGHT HOUSE SCHOOL, HANJIWERA BRIDGE, HANJIWARA PATTAN - 193121

JAMMU

886. JAMKASH VEHICLEADES PVT LTD (3306-33-01), NH-1A, BYE PASS, OPP CHANNI HIMMAT, JAMMU - 180015
PH :6006801639.

887. JAMKASH VEHICLEADES PVT LTD (3306-33-02), NEAR GENERAL BUS STAND, OPP. PHE OFFICE, B.C. ROAD, JAMMU - 180001
PH :9419224014.

888. JAMKASH VEHICLEADES PVT LTD (3306-33-04), SUNJWAN, DISTT. JAMMU - 180011
PH :7006018600.

889. PEAKS AUTO PVT LTD (3312-33-01), GANGYAL INDUSTRIAL AREA, BEHIND COCA COLA FACTORY, JAMMU - 180010
PH :9697001125.

890. JAMMU MOTORS PRIVATE LIMITED (3308-33-01), 6, AKHNOOR ROAD, JAMMU. - 180001
PH :9419118393.

891. JAMMU MOTORS PRIVATE LIMITED (3308-33-02), PLOT NO.2, RAJPURA CHUNGI OPP AG OFFICE, AKHNOOR ROAD, JAMMU - 180002
PH :9419118393.

892. PEAKS AUTO PVT LTD (3312--02), KHASRA NO.425 & 426, KHATA NO.425 & 426, TOPE SHRKHANIAN (BACKSIDE OF BEST PRICE), AKNOOR ROAD, JAMMU. - 180001
PH :9697001125.

893. JAMKASH VEHICLEADES PVT LTD (--07), KHEWAT NO. 25, KHATA NO. 355, KHASRA NO. 544 MIN PALOURA ROAD, JANIPUR, JAMMU. - 180007
PH :9419191502.

894. NSF VEHICLES (UNIT OF NEW STYLE FABRICATORS PVT LTD) (3314-33-01), INDUSTRIAL ESTATE, ASHOK NAGAR (ADJOINING BAJAJ 2WHEELER), NEAR SATWARI, JAMMU - 180003

895. NSF VEHICLES (UNIT OF NEW STYLE FABRICATORS PVT LTD) (--02), RANIBAGH, NEAR JAMMU AIRPORT, JAMMU., NEAR JAMMU AIRPORT, JAMMU. - 180001

KATHUA

896. JAMMU MOTORS PRIVATE LIMITED (--01), WARD NO.13, CHAK PARTAP SINGH HATLI MORH, NH1-A, KATHUA TEHSIL KATHUA - 184101
PH :9419118393.

KATRA

897. J&K VEHICLEADES PVT LTD (--01), VILLAGE: KOTLI BAJALAN, TEHSIL - KATRA, DISTRICT - REASI, JAMMU AND KASHMIR. - 182301

KRALPORA

898. JAMKASH VEHICLEADES PVT LTD (--01), SHULOORA ROAD, KARALPORA, DISTRICT - KUPWARA, JAMMU & KASHMIR. - 193224

KUPWARA

899. JAMKASH VEHICLEADES PVT LTD (1205--03), JAMKASH VEHICLEADES, NEAR GM FILLING STATION, DC OFFICE ROAD KUPWARA - 193223
PH :9622499902.

MAGAM

900. JAMKASH VEHICLEADES PVT LTD (--01), KHASRA NO. 34, MOUZA - CHICHILORA, MAGAM, GULMARG ROAD, TEHSIL - KWARHAMA, DIST.-BARAMULLA, JAMMU & KASHMIR. - 193401
PH :8825016046.

MAHANPUR

901. JAMMU MOTORS PRIVATE LIMITED (--01), MAHANPUR, DISTRICT KATHUA, TEHSIL MAHANPUR - JAMMU & KASHMIR. - 184202
PH :9596975060.

MANJAKOTE

902. JAMKASH VEHICLEADES PVT LTD (--01), NEAR PHC ROAD MANJAKOTE, TEHSIL MANJAKOTE, DISTRICT RAJOURI, J&K - 185131
PH :7006014395.

MARH

903. JAMKASH VEHICLEADES PVT LTD (--01), KHASRA NO. 269, LOWER MUTHI DHARMAL, DIST.-JAMMU, STATE - JAMMU & KASHMIR. - 181205
PH :7006898474.

NOWSHERA

904. JAMMU MOTORS PRIVATE LIMITED (--01), TEHSIL - NOWSHERA, DISTRICT RAJOURI, JAMMU & KASHMIR - PIN CODE – 185152 - 185152

PANCHARI

905. J&K VEHICLEADES PVT LTD (--01), VILLAGE MIR, TEHSIL PANCHARI, DISTT. UDHAMPUR J&K - 182125

PHINTER

906. JAMKASH VEHICLEADES PVT LTD (--01), KHASRA NO.2293/405 AND KHEWAT NO.81/98, GURHA KALYAL, PHINTER, TEHSIL RAMKOT, DISTT. KATHUA, J&K. - 184203

POONCH

907. JAMKASH VEHICLEADES PVT LTD (--01), VILLAGE KUNUYIAN, TEHSIL HAVELI POONCH, JAMMU & KASHMIR. - 185121
PH :7006014395.

PULWAMA

908. PEAKS AUTO PVT LTD (1204--03), MUGHAL ROAD, GUNGOO, PULWAMA - 192301
PH :9519275151.

RAJOURI

909. JAMKASH VEHICLEADES PVT LTD (3306–06), KALAKOTE ROAD, VILLAGE BADOL, RAJOURI - 185131
PH :7006014395.

REASI

910. J&K VEHICLEADES PVT LTD (--01), HOSPITAL ROAD, MADI, REASI, REASI, JAMMU & KASHMIR - 182311

RS PURA

911. JAMKASH VEHICLEADES PVT LTD (3306–03), GAGAIN MORTH, R S PURA, JAMMU, - 181102
PH :9419190370.

SHOPIAN

912. PEAKS AUTO PVT LTD (--01), AGLAR SOFANAMAN, SHOPIAN - 192303
PH :9519275151.

SIDHRA

913. JAMKASH VEHICLEADES PVT LTD (--01), KHASRA NO.80 & KHATA NO.100, VILLAGE SIDHRA, NH1A, NEAR BHARAT PETROLEUM PETROL PUMP, TEH. & DISTT. JAMMU - 180019
PH :9419134144.

SRINAGAR

914. HIGHLAND AUTOMOBILES PVT LTD (1202--01), SONWAR, SRINAGAR - 190001
PH :9419057564.

915. JAMKASH VEHICLEADES PVT LTD (1205--01), HYDERPURA BY PASS CROSSING, SRINAGAR - 190015
PH :7006037255.

916. PEAKS AUTO PVT LTD (1204-12-01), BYE PASS ROAD, NH - 1A, NEAR HOTAL SILVER STAR, SRINAGAR - 191101
PH :9519275151.

917. JAMKASH VEHICLEADES PVT LTD (1205--05), NARBAL CROSSING, NH-1A, SRINAGAR, JAMMU & KASHMIR - 190017
PH :9796700750.

918. KATHROO MOTORS PRIVATE LIMITED (1207-12-01), MIRZA KAMIL CHOWK, HAWAL SRINAGAR - 190001

SUMBAL

919. JAMKASH VEHICLEADES PVT LTD (--01), GULSHAN PORA, SRINAGAR- SUMBAL ROAD, DISTRICT BANDIPORA, J&K- 193501 - 193501

SURANKOTE

920. PEAKS AUTO JAMMU PVT LTD (--01), NEAR KNIET KING FILLING STATION, BHARAT PETROLEUM, POONCH MUGHAL ROAD, SURANKOTE, DISTT: POONCH - 185101
PH :9697001125.

THANA MANDI

921. JAMKASH VEHICLEADES PVT LTD (--01), HASPLOTE(CHRUNG), TEHSIL THANAMANDI, DISTRICT RAJOURI -185212 - 185212
PH :9419267607.

UDHAMPUR

922. J&K VEHICLEADES PVT LTD (--01), NATIONAL HIGHWAY 1A, NEAR DAK BANGLOW, UDHAMPUR - 182101
PH :7006881028.

URI (CHAAL BONIYAAR)

923. JAMKASH VEHICLEADES PVT LTD (--01), KHASRA NO.346/118, KEWAT NO.15, KHATA NO.30, MOUZ-CHALAL (URI), TEHSIL-BONIYAR, DISTT. BARAMULLA - 193123
PH :9419074012.

VIJAYPUR

924. JAMMU MOTORS PRIVATE LIMITED (--01), JAMMU PATHANKOT HIGHWAY, VIJAYPUR (SAMBA), J&K - 184120
PH :9596975060.

JHARKHAND

BAGODAR

925. RELIABLE INDUSTRIES (--01), SONTURPI, GT ROAD, GAIDA, BAGODAR, GIRIDIH, JHARKHAND. - 825322

BALIAPUR

926. CAR ONE (A UNIT OF RAJHANS AUTOMOBILES PRIVATE LIMITED) (--01), WARD NO 53, HOLDING NO - SAF3797, KANDRA SINDRI, BALIAPUR. - 828123
PH :7980074787.

BOKARO

927. HINDUSTAN AUTO AGENCY (--02), R1, CITY CENTRE, SECTOR-4, BOKARO STEEL CITY, BOKARO - 827004

928. HINDUSTAN AUTO AGENCY (--03), M2, SECTOR-4, CITRY CENTRE, BOKARO STEEL CITY (JHARKHAND) - 827004

BUNDU

929. HILLTOP MOTORS (A UNIT OF HIRALAL MOTORS PVT LTD) (--01), NH - 33 NEAR PPK COLLAGE , PS - BUNDU, RANCHI, JHARKHAND - 835204

CHAIBASA

930. PEBCO MOTORS LIMITED (--01), KOLHAN TIMBER MERCHANT, NEAR RAILWAY CROSSING, TATA ROAD, CHAIBASA, DISTRICT – WEST SINGHDHUM, JHARKHAND. - 833201

CHANDANKIYARI

931. HINDUSTAN AUTO AGENCY (--01), KHATA NO.119,PLOT NO.4055 AND 4056,, MOUZA BARKAMA,MAIN ROAD,CHANDANKIYARI, - 828134

CHANDWA

932. HILLTOP MOTORS (A UNIT OF HIRALAL MOTORS PVT LTD) (--01), HILLTOP MOTORS, MAIN ROAD, CHANDWA, PO AND PS, CHANDWA – 829203, DIST – LATEHAR, JHARKHAND - 829203
PH :7061157502.

CHIRKUNDA

933. RELIABLE INDUSTRIES (--01), PLOT NO. 109-110, KHAITAN NO. 12, MOUZA NO. 251, P.S. – CHIRKUNDA, DISTRICT – DHANBAD, JHARKHAND. - 828202

DALTONGANJ

934. PREMSONS MOTOR UDYOG PVT LTD (5103--02), KACEHRI ROAD, DALTONGANJ, PALAMU - 822101
PH :9835507004.

DEOGHAR

935. RELIABLE INDUSTRIES (5202--03), SHAHEED ASHRAM ROAD, JHAUNSAGARHI, DEOGHAR, - 814112

936. RELIABLE INDUSTRIES (--01), MOUZA - CHAKRIPAHARI, NO. 587, WARD NO. 36, DEOGHAR, JHARKHAND. - 814114

DHANBAD

937. RELIABLE INDUSTRIES (5202--01), KATRAS ROAD, DHANBAD, JHARKHAND. - 826001

938. RELIABLE INDUSTRIES (5202--02), BEHIND PRABHAT KHABAR, AT: KOLAKUSMA, P.O K.G. ASHRAM, SARAIDHELA , DHANBAD - 828127

939. RELIABLE INDUSTRIES (5202-52-06), SUGIADIH, HIRAK ROAD, SARAIDHELA, DHANBAD, JHARKHAND. - 828127
PH :9334094940.

940. CAR ONE (A UNIT OF RAJHANS AUTOMOBILES PRIVATE LIMITED) (--01), NH-2, GT ROAD, SAHARJORI, BARWADA, DHANBAD. - 828109

941. RELIABLE INDUSTRIES (5202--09), TILAKRAIDIH, K G ASHRAM, NH-32, GOVINDPUR, DHANBAD, JHARKHAND - 828109
PH :9031096662.

DUMKA

942. RELIABLE INDUSTRIES (--01), OPP DUDHANI PETROL PUMP, DEOGHAR-PAKUR ROAD,DUMKA (JHARKHAND) - 814101
PH :6205161170.

943. RELIABLE INDUSTRIES (--02), GILAN PARA, NEAR TOWER CHOWK - 814110

GARHWA

944. PREMSONS MOTOR UDYOG PVT LTD (--01), KHATA NO. 4, KHESRA NO. 108, 109, THANA NO. 342, PIPRAKALA, GARHWA, JHARKHAND. - 822114

GHATSHILA

945. PEBCO MOTORS LIMITED (--01), PLOT NO. 68, KHASRA NO.128, MAUZA PAORA, NH-33, NEAR FULL-DUNGRI CHOWK,GHATSHILA, EAST SINGHBHUM (JHARKHAND) - 832303

GIRIDIH

946. RELIABLE INDUSTRIES (5202--04), MOHANPUR, PACHAMBA ROAD, GIRIDIH. - 815301

947. RELIABLE INDUSTRIES (--08), PLOT NO. 7, HALKA NO. 12, KHATA NO. 2, THANA NO. 266, MOUZA - CHATRO, GIRIDIH, JHARKHAND. - 815301
PH :9835835101.

GODDA

948. RELIABLE INDUSTRIES (5202--05), ASANBANI CHOWK, MAIN ROAD, GODDA. - 814133
PH :6207129088.

GOMIA

949. HINDUSTAN AUTO AGENCY (--01), HAZARI, GOMIA-KATHWARA ROAD, - 829111

GUMLA

950. PREMSONS MOTOR UDYOG PVT LTD (5103--04), VANASTHALI COMPLEX PUGUCHAMPA NAGAR,NH-23,SISAI ROAD,GUMLA - 835207
PH :9835507004.

HAZARIBAGH

951. HINDUSTAN AUTO AGENCY (--01), NEAR SBI MAIN BRANCH, MAIN ROAD, HAZARIBAGH. - 825301
952. HINDUSTAN AUTO AGENCY (--02), MASIPIRHI, BABHANBAY, HAZARIBAGH , JHARKHAND. - 825301

JAMSHEDPUR

953. PEBCO MOTORS LIMITED (3101-31-01), MEDIUM SECTOR, INDUSTRIAL AREA, ADITYAPUR, JAMSHEDPUR - 831001
PH :9308433388.
954. PEBCO MOTORS LIMITED (3101-31-02), 16 BALICHALA, CONTRACTORS & GODOWN AREA, SONARI, JAMSHEDPUR - 831011
PH :9308433388.
955. MOTOR WORLD (A DIVISION OF KALIMATI MOTORS PVT LTD) (3102-31-01), N.H-33, NEAR PARDIH CHOWK, MANGO, JAMSHEDPUR - 831012

JAMTARA

956. RELIABLE INDUSTRIES (--01), PLOT NO. 483, PARWAT BIHAR, DUMKA ROAD, JAMTARA, JHARKHAND. - 815351

KATRAS

957. CAR ONE (A UNIT OF RAJHANS AUTOMOBILES PRIVATE LIMITED) (--01), RAJHANS REFRACTORIES, OPP. LIC OFFICE, RAJGANJ ROAD, KATRAS, DISTT. DHANBAD, JHARKHAND-828114 - 828114
PH :8910900556.

KHUNTI

958. PREMSONS MOTOR UDYOG PVT LTD (--01), PLOT NO. 747, KHATA NO. 2, DAHUGUTU, CHAIBASA ROAD, KHUNTI, JHARKHAND. - 835210
PH :9835507004.

KODARMA

959. HINDUSTAN AUTO AGENCY (--01), AT LALMAN DIGTHU, BESIDE KRISHNA SURYA COLD STORAGE, JHUMRI TILAIYA, P.S. – TILAIYA, DISTRICT – KODERMA, JHARKHAND. - 825409
PH :6201998936.

MURI

960. HILLTOP MOTORS (A UNIT OF HIRALAL MOTORS PVT LTD) (--01), NEAR BANK OF INDIA, SILLI MAIN ROAD, MURI, PIN - 835102 - 835102
PH :7061157502.

NAGAR UNTARI

961. PREMSONS MOTOR UDYOG PVT LTD (--01), PLOT NO.-598, KHATA, N0.-134, CITY, SHRI BANSHIDHAR NAGAR, JHARKHAND 822121 - 822121

PAKUR

962. RELIABLE INDUSTRIES (--01), C\O KHOKHAN RAY,HIRANPUR,,PAKUR, MAIN ROAD,VILL.SAHERKOL,PS PAKUR REGISTRY OFFICE - 816107
PH :9031096662.

PHUSRO

963. HINDUSTAN AUTO AGENCY (--01), DUMRI BERMO JAINA ROAD, PHUSRO, JHARKHAND - 829144

RAMGARH

964. HINDUSTAN AUTO AGENCY (--01), MARAR, RANCHI ROAD (NH-33), RAMGARH - 829122
PH :9263631345.

RANCHI

965. PREMSONS MOTOR UDYOG PVT LTD (5103-51-01), 502, KANKE ROAD, RANCHI. - 834008
PH :9304807355.
966. PREMSONS MOTOR UDYOG PVT LTD (5103-51-03), 10/P, NAMKUM INDUSTRIAL ESTATE,BEHIND HIGH TENSION INSULATOR FACTORY, LOWER CHUTIA, RANCHI - 834010
PH :9262899003.
967. PREMSONS MOTOR UDYOG PVT LTD (5103-51-05), PLOT NO.31 & 134, JOHNSON MORH, TUPUDANA INDUSTRIAL AREA, TUPUDANA, RANCHI - 834003
PH :9835507004.
968. PREMSONS MOTOR UDYOG PVT LTD (5103-51-06), PLOT NO.14 (P) KOKAR INDUSTRIAL AREA KOKAR, RANCHI. - 834001
PH :9835507004.
969. HILLTOP MOTORS (A UNIT OF HIRALAL MOTORS PVT LTD) (--01), KHATA NO. 247, MOUZA - PUNDAG,P.S. - PUNDAG, RANCHI, JHARKHAND. - 834004
PH :7061157502.
970. HILLTOP MOTORS (A UNIT OF HIRALAL MOTORS PVT LTD) (--02), NEAR KATHAL MORE, ARGORA RANCHI RD, NEAR EKLABBA TOWER, DHIPATOLI, ARGORA, RANCHI - 834004
PH :7061157502.
971. PREMSONS MOTOR UDYOG PVT LTD (5103-51-07), ARGORA-KATHAL MORE ROAD, OPPOSITE OF RELIANCE FRESH - 834001
972. TULSYAN MOTORS PRIVATE LIMITED (5110-51-01), TULSYAN COMPOUND, PANDRA, RATU ROAD, RANCHI JHARKHAND - 834001

SIMDEGA

973. PREMSONS MOTOR UDYOG PVT LTD (--01), R.S PLOT NO 4674 UNDER KHATA NO 157, SITUATED AT VILLAGE – GOTRA, NEAR GOUSHALA, MAIN ROAD, SIMDEGA, JHARKHAND. - 835223
PH :9835507004.

TORPA

974. HILLTOP MOTORS (A UNIT OF HIRALAL MOTORS PVT LTD) (--01), OPPOSITE NAGAR KARYALAY, KHUNTI SIMDEGA ROAD, TORPA, KHUNTI, JHARKHAND - 835227

KARNATAKA

ANEKAL

975. PRATHAM MOTORS PVT LTD (--04), SY#45/3, KAVAL HOSAHALLI, KASABA HOBLI, ANEKAL TALUK - 562106

ANKOLA

976. BHARATH AUTO CARS PVT LTD (--01), NEAR NARAYANA TEMPLE KAKKAR MUTTA, BELEGULI CROSS, ANKOLA, UK DISTRICT - 581314
PH :7829567400.

ATHANI

977. SHANTESHA MOTORS PVT LTD (--01), RS NO. 605, SHIVAYOGI NAGAR, BIJAPUR ROAD, ATHANI, DIST. - BELGAUM. - 591304
PH :8884472587.

ATHRADI

978. ABHARAN MOTORS PVT LTD (--04), HERABETTU ROAD ATHARDI UDUPI - 576107
PH :9845472500.

ATTIBELE

979. SURAKSHAA CAR CARE PVT LTD (--01), SURVEY NO.22/7/8, SARJAPUR MAIN ROAD, INDIABELE VILLAGE, OPP. TO GOLDEN LIBERTY, ATTIBELE P.O., BANGALORE. - 562107
PH :9449865665.

BAGALKOT

980. VIJAY MOTOWINGS PVT LTD (--01), 180/4-2,BELGUM RAICHUR ROAD,NEAR APMC MARKET YARD, BAGALKOT - 587103
PH :9481289167.

BAGEPALLI

981. BIMAL AUTO AGENCY INDIA PVT LTD (--01), H.L. NO. 423 AND 436 SRI SATHYA SAI NAGAR, ON NH-7, THIMAKALAPALLI BLOCK-II, PARAGODU GRAM PANCHAYATH, KASABA HOBLI, BAGEPALLI TALUK, CHIKKABALLAPUR DIST. - 561207
PH :9742458888.

BAJPE

982. BHARATH AUTO CARS PVT LTD (--01), SURVEY NO: 5/A3,SUNKADAKATTE, KOLAMBE VILLAGE,BAJPE, DAKSHINA KANNADA DIST, KARNATAKA,574142 - 574142

BANDAHALLI

983. BIMAL AUTO AGENCY INDIA PVT LTD (--01), SURVEY NO: 44/11, TAVARAKERE VILLAGE, NANDAGUDI HOBLI, BANDHALLI, HOSKOTE TALUK, BANGALORE RURAL DIST, KARNATAKA-562122 - 562122

BANGALORE

984. MANDOVI MOTORS PVT LTD (--01), 24/4,7TH MAIN,WILSON GARDENS,BANGALORE - 560027
985. MANDOVI MOTORS PVT LTD (--07), 17/A-2&3 IND.SUBURB.IIND STAGE, GORAGUNTEPALAYA, TUMKUR ROAD. YESWANTHPUR, BANGALORE - 560022
986. MANDOVI MOTORS PVT LTD (--05), NO.2/106 (NEXT TO KASSIA BLDG.),17TH CROSS,MAGADI CHORD ROAD EXTN. VIJAYANAGAR,BANGALORE - 560079
987. RNS MOTORS PVT LTD (7301--03), 2275 TUMKUR ROAD, GURGUNTEPALYA, YESHWANTPUR, BANGALORE - 560022
PH :9606933236.
988. BIMAL AUTO AGENCY INDIA PVT LTD (--01), NO. - 60/3, VENKATALA VILLAGE, YELAHANKA HOBLI, BANGALORE NORTH TALUK - 560064
989. BIMAL AUTO AGENCY INDIA PVT LTD (--01), 60/2, MAHADEVPURA, WHITE FIELD ROAD, BANGALORE - 560048
990. RNS MOTORS PVT LTD (7301--04), HOSUR ROAD,BOMMANAHALLI,MADIVALA POST,BANGALORE - 560068
PH :9148001412.
991. MANDOVI MOTORS PVT LTD (--08), NO. 70 SARAKKI INDUSTRIAL LAYOUT,J.P NAGAR,3RD PHASE, BANGALORE - 560078
992. PRATHAM MOTORS PVT LTD (--01), SY. NO. 78/4, OPP. TO BELLANDUR CENTRAL MALL, OUTER RING ROAD, VARTHUR HOBLI, BELLANDUR,BANGALORE EAST TALUK, BANGALORE- 560103 - 560037
993. BIMAL AUTO AGENCY INDIA PVT LTD (--02), NO. 69/2, SARAKKI, KANAKAPURA ROAD, BANGALORE - 560078
994. PRATHAM MOTORS PVT LTD (--02), STHANIKAM'S ARCADE, OPP. ST THERESA HOSPITAL, DR. RAJ KUMAR ROAD, A BLOCK,RAJAJINAGAR 2 STAGE, BANGALORE - 560010
995. KALYANI MOTORS PRIVATE LIMITED (--01), MYSORE ROAD,PANTHARAPALYA,KENGRI HOBLI,BANGALORE - 583201

996. BIMAL AUTO AGENCY INDIA PVT LTD (--03), NO.7/1, KALANAAGRAHARA VILLAGE, MOUNT ST. JOSEPH TRAINING COLLEGE FOR JESUITS COMPOUND, IIMB POST, BANNERGHATTA RD. , BANGALORE - 560076
997. BIMAL AUTO AGENCY INDIA PVT LTD (--04), 6TH CROSS, OFF OLD AIRPORT ROAD, HAL 2ND STAGE POST, BANGALORE - 560038
998. MANDOVI MOTORS PVT LTD (--0C), NO 1 TO 5, NAVODAYA HBSC, 4TH STAGE, 4TH MAIN, RAJAJINAGAR INDUSTRIAL TOWN, BASAWESHWAR NAGAR - 560044
999. KALYANI MOTORS PRIVATE LIMITED (--04), 119/1, 11TH CROSS,MALLESHWARAM,BANGALORE, - 560003
1000. MANDOVI MOTORS PVT LTD (--0D), 6/8, SHREE GANGA GARDEN, GANGA NILAYA, HENNUR CROSS, KALYANAGAR POST - 560043
1001. MANDOVI MOTORS PVT LTD (--0E), SY NO:26,AMBLIPURA VILLAGE,VATHUR HOBLI,BANGALORE,EAST TALUKA. - 560102
1002. KALYANI MOTORS PRIVATE LIMITED (--02), SY. NO.:58/1A & 61/22, AVALAHALLI, NH-4, K.R. PURAM, BANGALORE. - 560049
1003. KALYANI MOTORS PRIVATE LIMITED (--03), NO.129/4, KUNDALAHALLI VILLAGE, OPP. TO BROOKE FIELD HOSPITAL, BROOKFIELD, BENGALURU. - 574239
1004. SURAKSHAA CAR CARE PVT LTD (--01), 30/3 K AGRAHARA, HOSUR MAIN ROAD, ELECTRONIC CITY, BANGALORE - 580100
1005. SURAKSHAA CAR CARE PVT LTD (--02), #54/1, BOMMANAHALLI, HOSUR MAIN ROAD, BANGALORE - 560068
1006. KALYANI MOTORS PRIVATE LIMITED (--04), 250/1,BILEKAHALLI, BANNERGHATTA ROAD, BENGALURUE - 560076
1007. BIMAL AUTO AGENCY INDIA PVT LTD (--04), PLOT NO.37/38, 2ND STAGE, PEENYA INDUSTRIAL AREA, BANGALORE - 560058
1008. RNS MOTORS PVT LTD (7301--0G), 106/7, BELLARY ROAD, NEAR IOC PETROL BUNK, AMRUTHAALLI, NEAR HEBBAL FLYOVER, BENGALURU (KARNATAKA) - 560092 PH :6364884787.
1009. PRATHAM MOTORS PVT LTD (--05), #58/5 KUDLU VILLAGE, NEXT TO ZEE SCHOOL, SARJAPUR HOBLI, ANEKAL TALUK, BANGALORE - 560034
1010. RNS MOTORS PVT LTD (7301--0H), PLOT NO.129, KIADB INDUSTRIAL AREA, HEBBAGODI VILLAGE, BOMMASANDRA, JIGINI LINK ROAD, BANGALORE - 562158 PH :9538965771.
1011. KALYANI MOTORS PRIVATE LIMITED (--02), 10/1, HEBBAL , AMANIKERE KASABA HOBLI, YOGESH NAGAR, BANGALORE - 560024
1012. BIMAL AUTO AGENCY INDIA PVT LTD (--01), #184/185, OPP. FORUM VALUE MALL, WHITE FIELD MAIN ROAD, BANGALORE - 560066
1013. SURAKSHAA CAR CARE PVT LTD (--04), PLOT NO. 8 & 9, NEXT TO BDA COMPLEX, 4TH BLOCK, 100 FT ROAD, KORAMANGALA, BANGALORE, KARNATAKA - 560034
1014. KALYANI MOTORS PRIVATE LIMITED (--01), # 10/5, NAGADEVANHALLI, KENGERI, MYSORE ROAD, BANGALORE, KARNATAKA - 560056
1015. BIMAL AUTO AGENCY INDIA PVT LTD (--06), PLOT NO. 82, DODDA BANASWADI MAIN ROAD, BEHIND IOC PETROL PUMP, NEXT TO AIYAPPA TEMPLE, BANASWADI, BANGALORE, KARNATAKA - 560033
1016. VARUN MOTORS PVT LTD (--01), SURVEY NO: 93, PLOT NO:31,PEENYA III PHASE, INDUSTRIAL AREA,PEENYA,YESHWANTHPUR HOBLI, BANGALORE NORTH, BANGALORE,KARNATAKA-56005 - 560022
1017. KALYANI MOTORS PRIVATE LIMITED (--05), PLOT NO. 74/5, HORMAVU MAIN ROAD, NEAR BBMP OFFICE, KR PURAM HOBLI, BANGALORE. - 560043
1018. KATARIA AUTOMOBILES PRIVATE LIMITED (--01), NO. 5, 15TH CROSS, KOLANDAPPA GARDEN, ANEPALYA, POST – AADUGODI, BANGALORE. - 560030
1019. MANDOVI MOTORS PVT LTD (--0I), KATHA NO.4, SITUATED AT GANAKAL DHAKALE, SRINIVASPURA, KENGERI HOBLLI, UTTARAHALLI, BANGALORE - 560060
1020. VARUN MOTORS PVT LTD (--02), BEARING NO. 27/1 & 27/2, SURVEY NO. 41/3 & 42/7 BAGALAGUNTA, HESSARGHATTA MAIN ROAD, NEAR WIDIA SCHOOL BUS STOP, NAGASANDRA POST, BANGALORE. - 560073
1021. MANDOVI MOTORS PVT LTD (--0J), SITE NO. 58/1, J.B. KAVAL, MAJOR SANDEEP UNNIKRISHNAN ROAD, VIDYARANYAPURA, BANGALORE. - 560097
1022. KATARIA AUTOMOBILES PRIVATE LIMITED (--01), SURVEY NO. 8/3, 10/4, 10/2, VILLAGE – THALAGHATTAPURA, KANAKAPURA MAIN ROAD, NEAR NANDI TOYOTA, UTTARAHALLI HOBLI, TALUK - BENGALURU SOUTH, BANGALORE, KARNATAKA. - 560109
1023. RNS MOTORS PVT LTD (7301--0J), SY. NO. 11/2 & 12/1, VILLAGE – ARAKERE, BEGUR HOBLI, BANNERGHATTA ROAD, BANGALORE – 560 076. - 560076 PH :7760982836.
1024. SURAKSHAA CAR CARE PVT LTD (--05), SURVEY NO.2/6, BERTENA AGRAHARA, OPP. METRO CASH & CARRY, HOSUR MAIN ROAD, BANGALORE. - 560100
1025. KALYANI MOTORS PRIVATE LIMITED (--05), SY.NO.8/4, G HOSAHALLI MAIN ROAD, GOLLARAHATTI, V N POST, YESHWANTPURA HOBLI, MAGADI MAIN ROAD, BANGALORE - 560091
1026. SURAKSHAA CAR CARE PVT LTD (--06), BEARING NO. 54/4-320/2, BEGUR HOBLI, BOMMANAHALLI VILLAGE, BEGUR HOBLI, BANGALORE, KARNATAKA. - 560068
1027. PRATHAM MOTORS PVT LTD (--07), SUVEY NO. 43/1, ON SH-35, VILLAGE - YAMARE, SARJAPUR MAIN ROAD, POST - DOMMASANDRA, TALUKA - ANEKAL, BENGALURU RURAL, KARNATAKA. - 562125
1028. SURAKSHAA CAR CARE PVT LTD (--07), SURVEY NO 106/2A, CHANDAPURA MUNICIPAL TOWN,MUTHASANDRA HOSUR MAIN ROAD, ANEKAL TQ, BANGALORE, KARNATAKA - 560099
1029. VARUN MOTORS PVT LTD (--03), SY NO: 136 (OLD NO 54/8) SANGEGURUVANAHALLI(VP) KAMAKSHIPALAYA, WARD NO: 17, VRISHABHAVATHI NAGAR, MAGADI ROAD, BANGALORE NORTH THALUK, BANGALORE,KARNATAKA - 560079
1030. RNS MOTORS PVT LTD (--01), SURVEY NO. 48, HEBBAGODI, HOSUR MAIN ROAD,ANEKAL TALUK, BANGALORE URBAN DIST, KARNATAKA - 560099
1031. KALYANI MOTORS PRIVATE LIMITED (--03), SURVEY NO. 194/5, HUNSEMARANAHALLI, JALA HOBLI, DEVANAHALLI TALUK, (YELAHANKA NEW TALUK), NEW KEMPEGOWDA INTERNATIONAL AIRPORT ROAD, NORTH - 562110
1032. MANDOVI MOTORS PVT LTD (--09), MUNICIPAL NO. 133 (OLD NO.S 133 & 133/1), BULL TEMPLE ROAD, BBMP WARD NO. 49, K G NAGAR, BANGALORE, KARNATAKA-560018. - 560018
1033. KALYANI MOTORS PRIVATE LIMITED (--06), SURVEY NO. 67, NH-209, NAVARATAN GARDENS, (NEAR IOCL PETROL BUNK) DODDAKALASANDRA VILL., UTTARAHALLI HOBLI, KONANAKUNTE, KANAKAPURA-KENGERI ROAD, BANGALORE, KARNATAKA - 560062
1034. SANVIT AUTOMOTIVES LLP (--01), NO2599/1 OPP , SHELL PETROL BUNK, GOTTIGERE BANNERGHATTA ROAD, BANGALORE - 560083
1035. KALYANI MOTORS PRIVATE LIMITED (--C1), KATHA NO 39, SURVEY NO 58 HENNUR MAIN ROAD, KR PURAM HOBLI - 560043
1036. AVANISH AUTO LLP (--01), SURVEY NO 8/1B, JALAHALLI CROSS, T DASARAHALLI, BENGALURU - 560038
1037. SANVIT AUTOMOTIVES LLP (--02), SANVIT MOTORS, HULIMAVU TO BEGUR ROAD, GOTTIGERE, BANGALORE - 560037
1038. POPULAR VEHICLES AND SERVICES LIMITED (--01), SURVEY NO. 26, OMR ROAD, NEXT TO PRIMARY HEALTH CENTRE - 560037
1039. AVANISH AUTO LLP (--02), NO. 277, NELAMANGALA TALUK, DASANAPURA, HOBLI, MADANAYAKANAHALLI, BANGALORE - 560037

BANGARPET

1040. SURAKSHAA CAR CARE PVT LTD (--01), 180/4 OPP. APMC YARD, KOLAR-BANGARPET ROAD, BANGARPET (KARNATAKA) - 563114 PH :9449865601.

BANTWAL

1041. MANDOVI MOTORS PVT LTD (--01), NH-75, PANEMANGALORE, B.C. ROAD, BANTWAL, KARANATAKA - 574231 PH :9008810123.

BASAVAKALYAN

1042. LAHOTI MOTORS PVT LTD (--01), SURVEY NO: 122/16, TRIPURANTH, SASTAPUR BANGLA MUMBAI HIGHWAY, BASAVAKALYAN, - 585327

BELGAUM

1043. SHANTESHA MOTORS PVT LTD (--01), MUJAWAR COMPOUND,NEHRU NAGAR,BELGAUM, - 590010 PH :9902043711.
1044. SHANTESHA MOTORS PVT LTD (--03), PLOT NO. 39, RS NO. 670, CTS NO. 1612/3, KHANAPUR ROAD, UDAYMBA, BELGAUM (SCREE SHOT ATTACHED) - 590006 PH :8884433911.
1045. SHANTESHA MOTORS PVT LTD (--06), PLOT NO. 2/I, RS NO. 29, KIADB INDUSTRIAL AREA, KIADB BAUXITE ROAD, KANGRALI BK, BELGAUM. - 590010 PH :9731396805.

BELLARY

1046. KPF PVT LTD (--01), P.B. NO. 58,BELLARY HOSPET ROAD,ALLIPURA,BELLARY - 583101 PH :9449876025.

BELLUR CROSS

1047. KALYANI MOTORS PRIVATE LIMITED (--01), SURVEY NO, 537/61, BELLUR VILLAGE, BELLUR HOBLI, NAMAGANGALA TALUK, MANDYA DIST KARNATAKA 571418 - 571418

BELTHANGADY

1048. BHARATH AUTO CARS PVT LTD (4503--04), MAIN ROAD, BELTHANGADY, BELTHANGADY TALUK DK DISTRICT - 574214 PH :9886543230.

BHADRAWATI

1049. SHRUTI MOTORS PVT LTD (--01), SURVEY NO. 18/4, BH ROAD,KADADAKATTE HOBLI, KADADAKATTE, BHADRAVATI, SHIMOGA DIST., KARNATAKA - 577229

BHATKAL

1050. BHARATH AUTO CARS PVT LTD (--01), SURVEY NO. 157/2A, SUSGADI VILLAGE, NH66, BHATKAL, UTTARKANNADA DISTRICT, KARNATAKA. - 581320
PH :9008693940.

BIDAR

1051. LAHOTI MOTORS PVT LTD (--01), SI 50/51,PRATAP NAGAR, UDGIR ROAD, KIADB INDUSTRIAL AREA, NAUBAD, BIDAR - 585402
PH :8884412049.

1052. LAHOTI MOTORS PVT LTD (--02), PLOT NO. 58, NAUBAD INDUSTRIAL AREA, PRATAP NAGAR, BIDAR. - 585401
PH :9108707709.

BIJAPUR

1053. RNS MOTORS PVT LTD (7301--0I), SURVEY NO.25K/1, CHITRADURGA SHOLAPUR ROAD, VIJAYPURA, BIJAPUR DISTT. KARNATAKA - 586109
PH :8861208998.

BUDHIGERE

1054. BIMAL AUTO AGENCY INDIA PVT LTD (--01), KHATTA NO:115,SY. NO. 128/33, MANDUR MAIN ROAD, BUDIGERE CROSS, MANDUR VILLAGE, NEXT TO IOCL PETROL BUNK, BANGALORE EAST TALUK, BANGALORE, - 560049
PH :9742259528.

BYNDOOR

1055. ABHARAN MOTORS PVT LTD (--01), 3-256 & 3-257, SOUPARNIKA COMPLEX, NH 66, VILLAGE - YEDATHRE, BYNDOOR, KUNDAPUR TALUK, UDUPI DISTT. - 576214
PH :7899751777.

CHALLAKERE

1056. SAKETH AUTOMOBILES (--01), SITE NO. 9 & 10, SY. NO. 96/1, OPP. SUJIMALLESHWARA NAGAR, BELLARY ROAD, CHALLAKERE. - 577522
PH :9686550126.

CHAMARAJANAGAR

1057. MANDOVI MOTORS PVT LTD (--01), RAJ KAMAL BUILDING, SATHYAMANGALA ROAD, KUVEMPU EXTENSION, CHAMRAJNAGAR (KARNATAKA) - 571313
PH :9845445586.

CHANNAGIRI

1058. SHRUTI MOTORS PVT LTD (--01), SURVEY NO.5, MACHANAYAKANAHALLI, OPP. FIRE STATION, CHITRADURGA ROAD, N.H.13, CHANNAGIRI DISTT. DAVANGERE - 577213

CHANNAPATNA

1059. KALYANI MOTORS PRIVATE LIMITED (--01), PROPERTY NO.58, MALUR GRAMA, MALLUR HOBLI, CHANNAPATNA TALUKA RAMANAGARA DISTRICT - 562160
PH :9845066682.

CHANNARAYAPATNA

1060. VENKAT MOTORS (--01), PLOT NO. 389, 36/3, 132/1, BESIDES THIRUMALA RICE MILL, MYSORE ROAD, CHANNARAYAPATNA, DISTRICT: HASSAN, KARNATAKA. - 573116
PH :8147077144.

CHICKBALLAPUR

1061. BIMAL AUTO AGENCY INDIA PVT LTD (--01), NO. 169/1, AMMANI KANDAVARAKERE VILLAGE, KASABA HOBLI, CHIKBALLAPURA DISTRICT - 562101
PH :9742262499.

CHICKMANGALUR

1062. SHRUTI MOTORS PVT LTD (--01), AIT CIRCLE, KM ROAD, CHIKMANGALUR - 577102

CHIKKA TIRUPATI

1063. SURAKSHAA CAR CARE PVT LTD (--01), URVEY NO. 1/2, OPPOSITE TO BHARATH PETROL BUNK, ANCHEMUSKUR, CHIKKA TIRUPATI, KOLAR, KARNATAKA – 563160 - 563160

CHIKODI

1064. SHANTESHA MOTORS PVT LTD (--05), OPP. IOC PUMP, NEAR B.K.COLLEGE, MIRAJ ROAD, CHIKKODI, KARNATAKA - 591201
PH :7829925790.

CHINTAMANI

1065. PRATHAM MOTORS PVT LTD (--06), SURVEY NO. 33, NEXT TO VIJAYA P U COLLEGE, OPP. GOPASANDRA LAKE, SREENIVASPURA MAIN ROAD, CHINTAMANI, KARNATAKA - 563125

CHITRADURGA

1066. SAKETH AUTOMOBILES (--01), NEAR VEDA COMPLEX, NH-4, M H ROAD, CHITRADURGA - 572130
PH :9686550313.

DABASPET

1067. KALYANI MOTORS PRIVATE LIMITED (--01), SURVEY NO. 33/4 (OLD SY NO. 33/3 & 33/2C), KENGAL KEMPOHALLI VILL., SOMPURA HOBLI, DABASPET MAIN ROAD, NELAMANGALA TALUK, BANGALORE RURAL DIST., KARNATAKA-562111 - 562111

DAVANGERE

1068. SHRUTI MOTORS PVT LTD (--01), NEAR PANCHDEVASTHANA, P. B. ROAD, DAVANGERE, KARNATAKA - 577004

1069. SHRUTI MOTORS PVT LTD (--02), DOOR NO. 473/1, SURVEY NO. 18/1, BESIDE GMIT COLLEGE, OPP. M&M SHOWROOM, OLD P. B. ROAD, DAVANGERE, KARNATAKA - 577001

DEVANAHALLI

1070. BIMAL AUTO AGENCY INDIA PVT LTD (--01), SURVEY NO.241/114/6, 11TH WARD, BB ROAD, DEVANAHALLI, BANGALORE DISTT: - 562110
PH :9742262514.

DHARWAD

1071. RNS MOTORS PVT LTD (--01), NO.29A/1, 29A/2, 29A/3 PLOT NO.1, ASHOK NAGAR, DODDANAYAKANAKOPPA VILLAGE, GOA ROAD, DHARWAD, KARNATAKA - 580008

DODDABALLAPUR

1072. PRATHAM MOTORS PVT LTD (--01), PLOT NO. 50, OBADENAHALLI INDUSTRIAL AREA, DODDABALLAPUR 3RD PHASE, SY. NO. 107, AREHALLI GUDDADAHALLI, KASABA HOBLI TALUK – DODDABALLAPUR, DISTRICT – BENGALURU RURAL. - 561203
PH :9886671687.

DODDADUNNASANDRA

1073. KALYANI MOTORS PRIVATE LIMITED (--01), SURVEY NO.57/1A, DODDADUNNASANDRA VILLAGE, ANUGONDANHALLI HOBLI, HOSKOTE TALUK, BANGALORE RURAL, KARNATAKA-562114. - 562114

GADAG

1074. RNS MOTORS PVT LTD (7301--0E), PLOT NO. 64, DIAGONALLY OPP. REGIONAL TRANSPORT OFFICE, HUBLI GADAG MAIN ROAD, GADAG - 582103
PH :9538925602.

GAJENDRAGARH

1075. PRN AUTOMOTIVES LLP (---), BESIDE PIAGGIO SHOWROOM, HUBLI-GAJENDRAGAD ROAD, GAJENDRAGAD,GADAG DISTRICT,KARNATAKA - 582101

GANGAVATI

1076. MUNEER CARS
(A UNIT OF MUNEER ENTERPRISES PVT LTD) (--03), JAGANMATHA COMPLEX,RAICHUR ROAD,GANGAVATI, - 583227
PH :9449870754.

GAURIBIDANUR

1077. MANDOVI MOTORS PVT LTD (--01), NO.592/522, E DIVISION, OPP. PUSHPANJALI TALKIES, B.H. ROAD, GAURIBIDANUR TOWN, DISTT. CHIKBALLAPUR - 561210
PH :8217453513.

GOKAK

1078. SHANTESHA MOTORS PVT LTD (--01), RS NO.106/3D/2A, APMC ROAD, GOKAK, BELGAUM DISTT. - 591307
PH :7829925760.

GONIKOPPAL

1079. MANDOVI MOTORS PVT LTD (2501--07), KAIKERY VILLAGE,GONIKOPPAL,, - 571213
PH :9900064873.

GUBBI

1080. SAKETH AUTOMOBILES (--01), SY NO. 71, ASSESSMENT NO. 54/4/4911, PROPERTY NO. 28-5-252, NEAR PETROL BUNK, B H ROAD, GUBBI TOWN & TALUK, TUMKUR DISTRICT, KARNATAKA,572216 - 572216

GUDIBANDHA

1081. BIMAL AUTO AGENCY INDIA PVT LTD (--01), DOOR NO:160, 1ST WARD, OPP TO GOVERNMENT BUS STAND, BAGEPALLI ROAD, GUDIBANDA, CHICKABALLAPURA DISTRICT KARNATAKA - 561209
PH :9742261903.

GULBARGA

1082. LAHOTI MOTORS PVT LTD (--01), LAHOTI GARDENS,NEAR KMF, HUMNABAD ROAD,GULBARGA - 585104
PH :9480825014.

1083. LAHOTI MOTORS PVT LTD (--02), DOOR NO. 7-12-11, 2ND BLOCK, OPP. GUNJ BUS STAND, HUMNABAD ROAD, GULBARGA, KARNATAKA. - 585104
PH :7619342035.

GUNDLUPET

1084. KALYANI MOTORS PRIVATE LIMITED (--01), ASSESSMENT NO. 2491/S. NO. 51/1, 2, 3, N.S. 11 AND ASSESSMENT NO. 2494/S. NO. 51/ N.S. 11, MYSORE-OOTY ROAD, GUNDLUPET. - 571111
PH :9686855799.

HAGARIBOMMANAHALLI

1085. MUNEER CARS
(A UNIT OF MUNEER ENTERPRISES PVT LTD) (--01), SITE NO.112A/2 & 112A/3, BLOCK NO.2, WARD NO.:3, HAGARIBOMANAHALLI PANCHAYAT, BELLARY DISTRICT. - 583212
PH :9481343007.

HALIYAL

1086. RNS MOTORS PVT LTD (--01), SURVEY NO: 347P/27, DOOR NO:B1180/15 & B1180/16, HANUMAN COMPLEX, HALIYAL CIRCLE, MAIN ROAD, HALIYAL TOWN & TALUK, UTTARA KANNADA DISTRICT,KARNATAKA - 581329
PH :8284200200.

HARAPANAHALLI

1087. SHREE LAKSHMI CARS PVT LTD (--01), SURVEY NO 13/1, ADAVIHALLI VILLAGE, KASABA HOBLI, HARAPPANAHALLI, DISTRICT - VIJAYANAGARA, KARNATAKA - 583131

HAROHOLLI

1088. SURAKSHAA CAR CARE PVT LTD (--01), SURVEY NO. 40/4, HOSAKOTE VILLAGE, HAROHALLI HOBLI, KANAKAPURA TALUK, RAMANAGARA, - 562112
PH :9449865608.

HASSAN

1089. VENKAT MOTORS (--01), NO. 326, HASSAN GROWTH CENTRE, H.N. PURA ROAD, HASSAN - 573201
PH :9844044038.

HAVERI

1090. REVANKAR MOTORS PVT LTD (--01), NEAR TMAE SOCIETY CAMPUS, IJARILAKAMAPUR, PB ROAD, HAVERI - 581110
PH :7022016903.

H-CROSS

1091. BIMAL AUTO AGENCY INDIA PVT LTD (--01), PART NO.1, SITE NO.36, SBT COMPLEX, HOSKOTE-BANGALORE ROAD, KARIYANAPURA, H CROSS, SHIDLAGHATTA TALUK, BANGALORE RURAL DISTT. CHIKKABALLAPURA - 562122
PH :9738948126.

HEBRI

1092. ABHARAN MOTORS PVT LTD (--01), SURVEY NO. 61-7C1P1 & 61-2P1, VILLAGE & TALUK - HEBRI, KARKALA, DIST.-UDUPI, KARNATAKA. - 576112
PH :9900077605.

HEGGADADEVANA KOTE (H D KOTE)

1093. KALYANI MOTORS PRIVATE LIMITED (--01), SURVEY NO. 5/4, VILLAGE – YARAHALLI, KASABA HOBLI, TALUK – H.D.KOTE, DISTRICT – MYSORE. - 571125
PH :9686855799.

HESSARGHATA

1094. BIMAL AUTO AGENCY INDIA PVT LTD (--01), SY NO 294/3, HESARAGHATTA VILLAGE YELAHANKA TALUK, BENGALURU,KARNATAKA - 560088
PH :9743658662.

HONNAVAR

1095. RNS MOTORS PVT LTD (--01), SURVEY NO. 727/1A, KARKI VILLAGE, HONNAVAR (HONAVAR) TALUK AND TOWN, UTTARA KANNADA DIST., KARNATAKA - 581327

HOSANAGRA

1096. SHRUTI MOTORS PVT LTD (--01), SH-52,OPPOSITE CANARA BANK,HOSANGARA, PIN-577418, - 577418

HOSDURGA

1097. SAKETH AUTOMOBILES (--01), ASSESSMENT NO. 9310/6, PLOT NO. 6, HOSADURGA TOWN, SARASWATI BADAVANE, HOSADURGA, DIST. -CHITRADURGA, KARNATAKA. - 577527
PH :7625088946.

HOSKOTE

1098. BIMAL AUTO AGENCY INDIA PVT LTD (--05), NO. 205/108, SITUATED AT HOSKOTE TALUK, KASABA HOSKOTE TOWN, DISTT.- BANGALORE - 562114

HOSPET

1099. MUNEER CARS
(A UNIT OF MUNEER ENTERPRISES PVT LTD) (--01), BELLARY ROAD,SANKLAPUR,HOSPET , - 583203
PH :7619505001.

HUBLI

1100. RNS MOTORS PVT LTD (7301-73-01), PUNE - BANGALOR ROAD, UNKAL, HUBLI - 580025
PH :9538965902.

1101. RNS MOTORS PVT LTD (7301-73-0F), GOKUL ROAD MUREDESHWAR BHAVAN , HUBLI - 580030
PH :8861208532.

1102. REVANKAR MOTORS PVT LTD (7303--01), CTS NO.165/A, WARD NO.III, DESHPANDE NAGAR, HUBLI (KARNATAKA) - 580029
PH :8792008301.

1103. PRN AUTOMOTIVES LLP (7304-73-01), SURVEY NO 33, NAGASHETTI KOPPA VILLAGE BESIDES SRINIVAS GARDENS, HUBALI - 580020

HUNSUR

1104. KALYANI MOTORS PRIVATE LIMITED (--01), M-18 & M-19, KSSIDC INDUSTRIAL ESTATE, BM BYPASS ROAD, HUNSUR, MYSORE DISTRICT, KARNATAKA - 571105
PH :7022669699.

JEWARGI

1105. LAHOTI MOTORS PVT LTD (--01), S NO: 125, PLOT NO:7, FILTER BED ROAD, OPP. BUS DEPOT, JEWARGI, KALABURGI DISTRICT (FORMERLY GULABARGA) , KARNATAK-585310. - 585310
PH :9480825004.

KADABA

1106. MANDOVI MOTORS PVT LTD (--01), SURVEY NO.-11/20, KALARA, KADABA POST, DAKSHIN KANNADA DISTT., KARNATAKA - 574221
PH :9740912365.

KADUR

1107. SHRUTI MOTORS PVT LTD (--01), SHOP NO. 1 & 2, DAGA COMPLEX, ULUKINAKALLU, NEAR PEARLS CLUB, B.H. ROAD, KADUR, DISTRICT – CHIKMAGALUR. - 577548

KANAKAPURA

1108. KALYANI MOTORS PRIVATE LIMITED (--01), SURVEY NO. 447/1B, KASABA HOBIL, BUDIGUPPE GRAMA, TALUKA- KANAKAPURA, DISTRICT- RAMANAGARA. KARNATAKA. - 562117
PH :9900599933.

KARKALA

1109. ABHARAN MOTORS PVT LTD (--03), NH-13, MANGALORE KUDREMUKH ROAD, PULKERI, KARKALA - 574104
PH :9880232666.

KARWAR

1110. BHARATH AUTO CARS PVT LTD (--01), SURVEY NO. 459/2B, 456/2B AND 456/3, CHITTAKULA VILLAGE, KARWAR TALUKA, UTTARKANNADA DISTRICT, KARNATAKA. - 581301
PH :7829567400.

KITTUR, BELGAUM

1111. SHANTESHA MOTORS PVT LTD (--01), PLOT NO. 219, KITTUR INDUSTRIAL AREA (KIADB), POONA BANGALORE HIGHWAY (NH-4),KITTUR TOWN AND TALUK, BELGAUM DISTRICT, - 591115
PH :9731396808.

KOLAR

1112. MANDOVI MOTORS PVT LTD (--0F), 67/3 BANGALORE-CHENNAI HIGHWAY, KONDARAJANA HALLI, OPP HOTEL SHANTHI SAGAR, KOLAR. - 563101

KOLLEGAL

1113. MANDOVI MOTORS PVT LTD. (--01), MYSORE KOLLEGAL ROAD,, NEAR BRAHMARAMBA KALYANAMTAP, - 571440

KOPPA

1114. SHRUTI MOTORS PVT LTD (--01), NEARBY ARCACENT POWDER SHOP, UPPERPET, KOPPA, DIST-CHIKAMAGALURU, KARNATAKA - 577126

KOPPAL

1115. KPF PVT LTD (--01), SL. 283/10, NEAR MINI VIDHAN SOUDHA, KOPPAL HOSPET ROAD NH63, KOPPAL - 583238
PH :9449876027.

KRISHNARAJANAGARA (KRNAGARA)

1116. KALYANI MOTORS PRIVATE LIMITED (--01), NO:D, DORNAHALLI,DODDEKOPPALU GRAMA PANCHAYAT,KASABA HOBLI, KRISHNARAJANAGARA, MYSORE DISTRICT,KARNATAKA - 571602
PH :8971159430.

KRISHNARAJAPET

1117. MANDOVI MOTORS PVT LTD (--01), KHATA NO.3094, SY. NO.278, MYSORE CHENNERAYAPATNA ROAD (OPP. TO K.B.C. FUEL STATION), KRISHARAJAPET TOWN, TALUK MANDYA DISTT. KARNATAKA - 571423
PH :9845132038.

KUDUR

1118. KALYANI MOTORS PRIVATE LIMITED (--01), SURVEY NO.272/1 AND SURVEY NO.272/2, NARASANDRA VILLAGE, KUDURU HOBLI, MAGADI TALUK, RAMANAGARA DISTRICT, KARNATAKA 562127 - 562127

KUMTA

1119. BHARATH AUTO CARS PVT LTD (--01), MALLYA'S COMPOUND, NH-66, ALVEKODI KALBAGH VILLAGE, KUMTA (KARNATAKA) - 581334
PH :9448979530.

KUNDARPUR

1120. ABHARAN MOTORS PVT LTD (--02), NH-17, THAKKATTE, KUNDAPURA - 272877
PH :9880197524.

KUNIGAL

1121. SAKETH AUTOMOBILES (--01), NEAR KRS AGRAHARA,BM ROAD, KUNIGAL, TUMKUR DISTRICT, KARNATAKA - 572130
PH :9686550127.

KUSHAL NAGAR

1122. MANDOVI MOTORS PVT LTD (--01), SY NO:88,MADAPATANA,KUSHAL NAGAR,SOMVARPUR,NORTH KODAGU, KARNATAKA - 571234
PH :9900080893.

LINGASUGUR

1123. MUNEER CARS
(A UNIT OF MUNEER ENTERPRISES PVT LTD) (--01), PLOT NO. 11, BASAMMA COMPLEX, RAICHUR ROAD, LINGSUGUR, RAICHUR, KARNATAKA - 584122
PH :9480830255.

MADDUR

1124. MANDOVI MOTORS PVT LTD (--01), SURVEY NO 802/2A4B, NEAR SANJAY THEATRE, BM ROAD, MADDUR TOWN,MANDYA DISTRICT, KARNATAKA - 571428

MADIKERI

1125. KALYANI MOTORS PRIVATE LIMITED (--01), BASAPPA THEATURE BUILDING, DASAWAL ROAD,MADIKERI KODAGU DISTRICT. - 571201
PH :9606073867.

MAGADI

1126. PRATHAM MOTORS PVT LTD (--01), SY NO:92/2, THIRUMALAI VILLAGE, KASABA HOBLI, MAGADI TOWN & TALUK, RAMANAGARA DISTRICT, KARANATAKA - 562120
PH :9900058483.

MALUR

1127. MANDOVI MOTORS PVT LTD (--01), NO 12/8, BANGALORE - MALUR MAIN ROAD, OPPOSITE OF INDIAN OIL PETROL BUNK - 563130

MANCHENAHALLI

1128. VARUN MOTORS PVT LTD (--01), NO:1219,GOLAPPA COMPUND, MAHESHWARI CIRCLE, MANCHENAHALLI, GOWRIBIDANUR TALUK, CHIKKABALLAPUR DIST, KARNATAKA-561211 - 561211
PH :9513979162.

MANDYA

1129. MANDOVI MOTORS PVT LTD (2501--06), 1660/A, KALLAHALLI EXTENSION, M.C. ROAD, - 571401
PH :9611165873.

1130. KALYANI MOTORS PRIVATE LIMITED (--02), PROPERTY NO 139/A,UMMADAHALLI VILLAGE, KASABA HOBLI, MANDYA,KARNATAKA - 571401

MANGALORE

1131. MANDOVI MOTORS PVT LTD (4502-45-01), ARVIND BUILDING, BALMATTA ROAD, HAMPANKATTA, MANGALORE - 575001
PH :9845107701.

1132. BHARATH AUTO CARS PVT LTD (4503-45-01), NH-17, KUNTIKAN JUNCTION, DEREBAIL, NEAR A.J. HOSPITAL, MANGALORE - 575004
PH :9886785730.

1133. MANDOVI MOTORS PVT LTD (4502-45-03), NO., HASSAN GROWTH CENTRE,ADYAR,N.H. -48,,MANGALORE - 575007
PH :9845514146.

1134. MANDOVI MOTORS PVT LTD (4502--07), BALLAL INDUSTRIAL ESTATE, YAYYADI, MANGALORE,KARNATAKA - 575008
PH :9880079235.

1135. BHARATH AUTO CARS PVT LTD (--06), PLOT NO. 290/1, 291/1, KODIALBAIL VILLAGE, NEXT TO BHARATH BEEDI WORKS PVT. LTD., BUNTS HOSTEL, KADRI ROAD, MANGALORE, KARNATAKA - 575002
PH :9886333030.

1136. MANDOVI MOTORS PVT LTD (4502--08), DOOR NO. 2-63/4, SUJITH BAGH LANE, YEYYADE, MANGALORE, DISTRICT – DAKSHINA KANNADA, KARNATAKA - 575008
PH :9880278077.

1137. BHARATH AUTO CARS PVT LTD (--08), S. NO. 1376/1-41, 1375/41-2-A1P1, 2A1P3, 1373/1-40, 1369/1-40-A2, KASABA BAZAR, KANDADAPALLI, KUDROLI, TALUK - MANGALORE, MANGALORE, KARNATAKA. - 575003
PH :9886785730.

MUDBIDRI

1138. BHARATH AUTO CARS PVT LTD (4503--03), BHARATH BEEDI COMPOUND, NEAR ALVAR'S HOSPITAL, MOODBIDRI - 574227
PH :9886785430.

MUDHOL

1139. VIJAY MOTOWINGS PVT LTD (--01), PLOT NO. 3B, IN NARS NO. 15-2, WARD NO. 5, VISHWESHWAR COLONY, LOKAPUR ROAD, MUDHOL TOWN, BAGALKOT DIST. - 587313
PH :9606046173.

MUDIGERE

1140. SHRUTI MOTORS PVT LTD (--01), SURVEY NO.10/1, 10/2, SITE NO.14, 15 NEXT TO SRIRANGPURA VIHAR,GOWDAHALLI RD - 577132

MULBAGAL

1141. PRATHAM MOTORS PVT LTD (--01), NO. 35-6-117/1, CHITTOOR MAIN ROAD, VEERABHADRA NAGAR, MULBAGAL, KOLAR DIST., KARNATAKA-563131 - 563131

MULKI

1142. BHARATH AUTO CARS PVT LTD (4503--05), BHARATH BEEDI COMPOUND, NH-17 MULKI - 574154
PH :9986020730.

MURUDESWAR

1143. RNS MOTORS PVT LTD (7301--02), NH-17, MANGALORE-BOMBAY ROAD, MURUDESHWAR, KARNATAKA - 581350
PH :9538965969.

MYSORE

1144. MANDOVI MOTORS PVT LTD (2501-25-01), NO: 5 K.R.S.ROAD, MYSORE - 570005
PH :9945248860.

1145. MANDOVI MOTORS PVT LTD (2501-25-05), NO.182/145/C, BANNUR ROAD, SIDHARTHA NAGAR, MYSORE, KARNATAKA - 570011
PH :9845939936.

1146. KALYANI MOTORS PRIVATE LIMITED (2503-25-01), MANATHAVADI ROAD, VIDYARANYA PURAM, MYSORE - 570008
PH :7259255558.

1147. MANDOVI MOTORS PVT LTD (2501-25-08), 217/2., HUNSUR ROAD, HINKAL POST, MYSORE, KARNATAKA - 570017
PH :9845939937.

NAGAMANGALA

1148. MANDOVI MOTORS PVT LTD (--01), SURVEY NO:3316/2327,VISHALAXAMMA COMPLEX, T B BADAVANE B M ROAD, NAGAMANGALA TOWN, MANDYA DISTRICT, KARNATAKA - 571432
PH :9845132038.

NANJANGUD

1149. KALYANI MOTORS PRIVATE LIMITED (--01), 4340/4159/4, HULLAHALLI ROAD, NANJANGUD, DISTRICT – MYSORE, KARNATAKA. - 571301
PH :9686855799.

NARASIMHARAJAPURA

1150. SHRUTI MOTORS PVT LTD (--01), SURVEY NO # SURVEY NO.173,/P KOPPA ROAD, NAGALAPURA VILLAGE,NARASIMHARAJAPURA, CHIKMAGALU R DIST.,KARNATAKA - 577134

NARAVI

1151. MANDOVI MOTORS PVT LTD (--01), SURVEY NO:122/1B1,DOOR NO:4/59,SHRI CHAITHANYA , ARASAKATTE, NARAVI, BELTHANGADY TALUK, DAKSHINA KANNADA DIST, KARNATAKA-574109. - 574109
PH :9740392005.

NELAMANGALA

1152. RNS MOTORS PVT LTD (--01), NO.167/2, TUMKUR ROAD, KASABA HOBLI, NH4, NELAMANGALA, BANGALORE RURAL DT., BENGALURU, KARNATAKA - 562123
PH :7259875385.

NELYADI

1153. BHARATH AUTO CARS PVT LTD (--01), SURVEY NO. 97/11P AND SURVEY NO. 97/9, VILLAGE - HOSAMAJALU KAUKRADY, POST - NELYADI, TALUK - PUTTUR, DIST.-DAKSHIN KANNADA . - 574229
PH :9886072730.

OORGAUMPET

1154. BIMAL AUTO AGENCY INDIA PVT LTD (--01), SITE NO:10, NEW KATHA NO: 251, ROBERTSONPET, KGF, OORGAUMPET, KOLAR DIST, KARNATAKA- 563122 - 563122
PH :9513748707.

PADUBIDRI

1155. ABHARAN MOTORS PVT LTD (--01), PLOT NO. 51/20, VILLAGE – PADUBETTU, PADUBIDRI TOWN, TALUKA & DISTRICT – UDUPI, KARNATAKA. - 574111
PH :9880232999.

PANDAVAPURA

1156. KALYANI MOTORS PVT. LTD. (--01), SY NO.299/12, KENNALU VILLAGE,, KASABA HOBLI, PANDAVAPURA TALUK, - 571435

PERESANDRA

1157. BIMAL AUTO AGENCY INDIA PVT LTD (--01), SURVEY NO # NO.39,NO:113, SAMRUDDHI NILAYA GROUND FLOOR, NH7, ARURU VILLAGE, PERESANDRA, CHIKKABALLAPUR DISTRICT, KARNATAKA- 562104 - 562104
PH :8660799820.

PUTTUR

1158. BHARATH AUTO CARS PVT LTD (4503--02), NEAR RAIWAY STATION, HARADY, PUTTUR - 517583
PH :9886072730.

RAICHUR

1159. MUNEER CARS (A UNIT OF MUNEER ENTERPRISES PVT LTD) (--02), #12-10-64,GOUSHAL ROAD,SIYA TALAB AREA,RAICHUR - 584101
PH :9480830264.

RAJANUKUNTE

1160. VARUN MOTORS PVT LTD (--01), SURVEY NO. 3/1, SITE NO. 6 , SINGANAYAKANAHALLI, RAJANKUNTE, BANGALORE NORTH TALUK, BANGALORE URBAN, KARNATAKA - 560064
PH :9513979162.

RAMANAGARA

1161. KALYANI MOTORS PRIVATE LIMITED (--02), #K1318/2034C,OPP TO ROTARY HOSPITAL,BM ROAD, RAMNAGARAM - 571511

RANEBENNUR

1162. REVANKAR MOTORS PVT LTD (--01), SCHEDULE A-2, OPP. STJIT ENGINEERING COLLEGE, P B ROAD, RANEBENUR, KARNATAKA. - 581115
PH :8830947883.

SAGAR

1163. SHRUTI MOTORS PVT LTD (--01), BESIDE H GANAPATHIYAPPA PETROL BUNK (BP), B H ROAD, NH-206, SAGAR, SHIMOGA DISTT. - 577401

SAKLESHPUR

1164. VENKAT MOTORS (--01), SITE NO. 19, 3RD WARD, SARASWATHIPURAM, SAKLESHPUR TOWN, DISTRICT – HASSAN. - 573134
PH :7892809634.

SARJAPURA

1165. PRATHAM MOTORS PVT LTD (--01), SURVEY NO. 476/3, SARJAPUR TOWN, TALUKA – ANEKAL, SARJAPUR HOBLI, DISTRICT – BANGALORE URBAN, KARNATAKA. - 562125
PH :7760962890.

SAUNDATI

1166. SHANTESHA MOTORS PVT LTD (--01), CTS NO. 4038/B/1,PLOT NO 16/3 DHARWAD ROAD, KENCHALARKOP, SAUNDATTI - 591126

SHIKARIPURA

1167. SHREE LAKSHMI CARS PVT LTD (--01), 35/5, AADHI SAKTI TEMPLE SHIMOGA-SHIKARIPURA ROAD, SHIKARIPURA - 577427

SHIMOGA

1168. SHRUTI MOTORS PVT LTD (--01), K.NO 599, SHANKARMUTT ROAD, SHIMOGA - 577201
1169. SHRUTI MOTORS PVT LTD (--02), BLOCK L-1, INDUSTRIAL ESTATE, BEHIND HP PETROL BUNK, SAGAR ROAD, SHIMOGA. - 577204
1170. SHRUTI MOTORS PVT LTD (--03), SURVEY NO. 41/3 & 41/4, HONNALI ROAD, SHANTHI NAGAR, SHIMOGA. - 577201
1171. SHREE LAKSHMI CARS PVT LTD (--01), SURVEY NO : 74 & 86 (PLOT NO 1800), URGADUR, BY PASS ROAD, SHIVAMOGGA, KARNATAKA – 577203 - 577203

SIDDAPUR

1172. BHARATH AUTO CARS PVT LTD (--01), SURVEY NO. 211, NEAR IOCL PETROL BUNK, JOG ROAD, VILLAGE – HOSUR, TALUK – SIDDAPUR, DISTRICT – UTTARA KANNADA. - 581355
PH :9449402730.

SINDHANUR

1173. KPF PVT LTD (--01), SY. NO. 168/15, EJ HOSAHALLI CAMP GANGAVATHI MAIN ROAD, SINDHANUR, RAICHUR DISTRICT,KARNATAKA - 584128 - 584128

SIRISI

1174. RNS MOTORS PVT LTD (--01), SURVEY NO 43/B, LANDAKANALLI VILLAGE, DODNALLI GRAMA,SIRSI TALUK AND HOBALI, UTTAR KANNADA, KARNATAKA - 581402
PH :9895979023.

SIRSI

1175. RNS MOTORS PVT LTD (7301--0D), K H B COLONY, SIRSI - 581402
PH :9538925606.

SIRUGUPPA

1176. MUNEER CARS
(A UNIT OF MUNEER ENTERPRISES PVT LTD) (--01), SITE NO:31C/1B & PLOT NO.1, BELLARY - SIRUGUPPA MAIN ROAD, SIRUGUPPA TALUK, BELLARY DISTRICT. - 583121
PH :7619505001.

SOMWARPET

1177. MANDOVI MOTORS PVT LTD (--01), SURVEY NO.130 SITUATED AT MADIKERI ROAD, NAGROOR VILLAGE, BALAGUNDA POST, SOWMARPET TALUK, NORTH KODAGU DISTT. - 571236
PH :9845115665.

SORABA

1178. SHRUTI MOTORS PVT LTD (--01), NO: 2281681997, 6TH WARD, KHATA NO: 7/A-1/B, OPPOSITE TO GOVERNMENT JUNIOR COLLEGE, SHIRALA-KOPPA ROAD, SORABA, SHIVAMOGGA DIST, KARNATAKA- 577429. - 577429

SRINGERI

1179. SHREE LAKSHMI CARS PVT LTD (--01), SL NO 711, DHRUVANISH GRAND, RAJANAGAR, SRINGERI - 577139

SRINIVASAPURA

1180. SURAKSHAA CAR CARE PVT LTD (--01), SY NO. 40, VPRD NO. 86, PROPERTY NO. 84 & 87, CHALDIGANA HALLI GRAMA PANCHAYATH, PANNASAMAKANA HALLI VILLAGE, SRINIVASAPURA POST & TALUK, DIST.-KOLAR, KARNATAKA - 563135
PH :9449865601.

SULLIA

1181. MANDOVI MOTORS PVT LTD (4502--04), ODABAI SULLIA,MANGALORE MYSORE ROAD,KARNATAKA - 574239
PH :9900002325.

SURTHKAL

1182. MANDOVI MOTORS PVT LTD (4502--02), KANA ROAD, SURATHKAL - 574158
PH :9845514143.

T. NARASIPURA

1183. MANDOVI MOTORS PVT LTD (--01), KHATA NO:472/473/474, OPP TO SRI RAGHAVENDRA SWAMY MUTT, CHAMARAJANAGAR ROAD, T. NARASIPURA TOWN, MYSORE DISTRICT, KARNATAKA - 571124
PH :9845132038.

THIRTHAHALLI

1184. SHRUTI MOTORS PVT LTD (--01), PLOT NO. 1507/2187, OPP. TO HEGDE PETROL PUMP, AGUMBE ROAD, THIRTHAHALLI . - 577432

THOKOTU

1185. BHARATH AUTO CARS PVT LTD (--01), NH-66, KAPIKAD, ULLAL,THOKOTTU, DAKSHINA KANNADA DISTT. - 575017
PH :9538796330.

TIPTUR

1186. SAKETH AUTOMOBILES (--03), BANDIHALLI INDUSTRIAL ESTATE, N.H.:206, TIPTUR, KARNATAKA - 572201
PH :9945301023.

TUMKUR

1187. SAKETH AUTOMOBILES (--01), SIRA ROAD, TUMKUR - 572106
PH :9686550323.

UDUPI

1188. ABHARAN MOTORS PVT LTD (--01), N.H. 17, NITTUR, UDUPI - 576103
PH :9880232999.
1189. ABHARAN MOTORS PVT LTD (--05), N0. 305/1C, DOOR NO. 5-51A, RAILWAY STATION ROAD, INDRALI, UDUPI, DISTT. - UDUPI . - 576101
PH :9686694341.

UJIRE

1190. BHARATH AUTO CARS PVT LTD (--01), SURVEY NO.237-2B1, MANGALORE-CHARMADY ROAD, NEAR INDIAN OIL PETROL PUMP, SAMPIGE NAGAR, UJIRE, BELTHANGADY TALUKA, DISTT. DAKSHINA KANNADA, KARNATAKA. - 574240
PH :9886176130.

UPPINANGADI

1191. MANDOVI MOTORS PVT LTD (4502--05), NR.PADMA VIDYA IOC PETROL STATION-34, NEKKILADY, UPPINANGADY - 574241
PH :9740912365.

VENOOR

1192. BHARATH AUTO CARS PVT LTD (--01), RESURVEY NO:8/5, KARIMANELU VILLAGE, VENOOR, BELTHANGADY TALUK, DAKSHINA KANNADA DIST., KARANATAKA-574242. - 574242

VIJAYPURA

1193. BIMAL AUTO AGENCY INDIA PVT LTD (--01), DOOR NO 563, MARUTHI NAGAR, CHIKKABALLAPUR ROAD, VIJAYAPURA TOWN, DEVANAHALLI TALUK, BANGALORE RURAL DISTRICT KARNATAKA. - 562135
PH :8884433996.

VITTAL

1194. MANDOVI MOTORS PVT LTD (--01), DOOR NO. 1-287 (9), JISHAN COMPLEX, VITTAL TOWN, TALUKA – BANTWAL, DISTRICT – DAKSHIN KANNADA - 574243
PH :9008810123.

YADGIR

1195. LAHOTI MOTORS PVT LTD (--01), SURVEY NO. 101/1, GULSARAM VILLAGE, YADGIR TOWN & DISTT, SHAHPUR TALUKA, KARNATAKA - 585223
PH :9480825031.

KERALA

ADIMALI

1196. INDUS MOTOR COMPANY PRIVATE LIMITED (--01), RE SURVEY NO:647/5-2, BUILDING NO:15/121, MANNANKANDAM VILLAGE, ADIMALI, DEVIKULAM TALUK, IDUKKI DISTRICT, KERALA-685561 - 685561

ADOOR

1197. AVG MOTORS PVT LTD (--02), KOTTAMUKAL, K.P. ROAD, ADOOR PO, PATHANAMTHITTA, KERALA - 691523
PH :9446355900.

ADUR

1198. INDUS MOTOR COMPANY PRIVATE LIMITED (2702--0A), M. C. ROAD, MITHRAPURAM, ADOOR, PATHANMTHITTA - 689518
PH :9745998303.

ALAKODE

1199. POPULAR VEHICLES AND SERVICES LIMITED (--01), RE. SY. NO. 23/1958, ARANGAM, ALAKODE, TALIPARAMBA TALUK, KANNUR DISTRICT, KERALA – 670571. - 670571

ALANALLUR

1200. KVR AUTOCARS PVT LTD (--01), BUILDING NO. 10/1050, CHANDAPPADI, MANNARKAD ROAD, POST – ALANALLUR, TALUKA – MANNARKAD, DISTRICT - PALAKKAD, KERALA. - 678601
PH :9747020582.

ALAPPUZA

1201. INDUS MOTOR COMPANY PRIVATE LIMITED (2702--12), BLOCK NO. 145, RE-SURVEY NO. 79, ALAPPUZHA WEST VILLAGE, AMBALAPPUZHA TALUK, ALAPPUZHA DIST. KERALA-699002. - 699002
PH :9745977744.

ALATHIYOOR

1202. A M MOTORS (--11), RE SURVEY NO. 160/3, 161/7 (OLD SURVEY NO. 359/1), VILLAGE - ALATHIYOOR, TIRUR PONNAI ROAD, TALUKA - TIRUR, DIST.-MALAPPURAM, KERALA. - 676102

ALATHUR

1203. BRD CAR WORLD LIMITED (--01), SURVEY NO. 456/8, 455/8, 455/9, ERATTUKKULAM, KATTUSSERY VILLAGE, ALATHUR TALUKA, PALAKKAD DISTRICT, KERALA - 678682
PH :9745634999.

ALLEPEY

1204. POPULAR VEHICLES AND SERVICES LIMITED (--01), BUILDING NO. XVIII/135, DOOR NO. 13/449, CCSB ROAD, PALACE WARD, CHUNGAM, ALAPPUZHA, KERALA-688011. - 688011
PH :9778698161.

ALUVA

1205. BRD CAR WORLD LIMITED (--09), RE SURVEY NO.330/7, NH-47, KUNNUMPURAM, PO-DESHAM PANCHAYATH, CHENGAMANAD, ALUVA. - 683102
PH :9745907100.

ANCHAL

1206. SARATHY AUTO CARS (--01), SURVEY NO. 371/9, VILLAGE – IDAMULAKKAL, P.O. – ANCHAL, TALUK – PUNALUR, DISTRICT – KOLLAM. - 691306
PH :9526906665.
1207. POPULAR VEHICLES AND SERVICES LIMITED (1601--14), RE SURVEY NO 581/5, BLOCK NO 33, ANCHAL VILLAGE, NEAR ALBILAL DRIVING SCHOOL, KAITHADY JUNCTION, ANCHAL, KERALA - 691306
PH :9778698200.

ANGAMALY

1208. INDUS MOTOR COMPANY PRIVATE LIMITED (2702--0F), ANGAMAALY KALADY ROAD, MC ROAD, ANGAMALY - 683572
PH :9745998434.
1209. POPULAR VEHICLES AND SERVICES LIMITED (2701--0D), 182-AIRPORT JUNCTION NAGAR,M. C. ROAD,ANGAMALY - 683572
PH :8086078886.

AREEKODE

1210. KVR AUTOCARS PVT LTD (--01), SURVEY NO. 196/22-4,196/10-1,196/22-2,19, KEEZHUPARAMBU VILLAGE, PATHANAPURAM, AREEKODE - 673639

ATTINGAL

1211. POPULAR VEHICLES AND SERVICES LIMITED (1601--07), PALAMKONAM, PERUNKULAM,VIA-.ALAMCODE, ATTINGAL - 695102
PH :8086078788.
1212. SARATHY AUTO CARS (--01), SURVEY NO. 2952/17 & 2952/4, KIZHUVILLAM VILLAGE, ATTINGAL, CHARAYINKEEZHU TALUK, TRIVANDRUM DIST., KERALA. - 695104
PH :9526052765.
1213. INDUS MOTOR COMPANY PRIVATE LIMITED (--01), SY. NO. 54/13, 14, 15, 16, (OLD SY. NO. 22, 22/13, 16), IN BLOCK NO. 3 OF VELLOOR VILLAGE, EASTERN SIDE OF NATIONAL HIGHWAY 47, NEAR INTERNATIONAL SCHOOL, CHEMBAKAMANGALAM, KORANI PO, ATTINGAL, TRIVANDRUM DIST., KERALA. - 695104
PH :9747550888.

BALARAMAPURAM

1214. POPULAR VEHICLES AND SERVICES LIMITED (1601--11), POOVAR ROAD, VAZHIMUKKU, BALARAMAPURAM P.O., TRIVANDRUM DISTRICT - 695501
PH :8943345922.

BHARANIKAVU

1215. SARATHY AUTO CARS (--01), URVEY NO. 116/2 OF 4, SASTHAMKOTTA VILLAGE, BHARANIKAVU TOWN, KUNNATHOOR TALUK, KOLLAM DISTRICT. KERALA, PIN-690520 - 690520
PH :7994825565.

CALICUT

1216. INDUS MOTOR COMPANY PRIVATE LIMITED (4701-47-01), MARUTI WORKSHOP, PANIKKER ROAD, CALICUT, NADAKKAVE - 673011
PH :9745998019.
1217. POPULAR VEHICLES AND SERVICES LIMITED (4702-47-02), BEHIND MIMS, EASWARAMANGALAM ROAD, GOVINDAPURAM P.O., CALICUT - 673016
PH :9846298613.
1218. INDUS MOTOR COMPANY PRIVATE LIMITED (4701-47-06), KOYA ROAD JUNCTION, PUTHIYANCADI, POST WEST HILL, CALICUT - 673005
PH :9745998020.
1219. INDUS MOTOR COMPANY PRIVATE LIMITED (4701-47-08), NEAR STEEL COMPLEX, NALLALAM, CALICUT - 673655
PH :9745998018.
1220. POPULAR VEHICLES AND SERVICES LIMITED (4702-47-07), NH-17 BYE PASS,PACHAKKIL, MALAPARAMBU P.O., KOZHIKODE, CALICUT - 673009
PH :9288012082.
1221. BIMAL AUTO AGENCY INDIA PVT LTD (--01), RE SURVEY NO. 13, BUILDING NO. 5/548, KRISHNARJUNA BUILDING, AREEKAD, VILLAGE AND PANCHAYATH – CHERUVANNUR, P.O. – NALLALAM, CALICUT (KOZHIKODE) , KERALA. - 673027
1222. INDUS MOTOR COMPANY PRIVATE LIMITED (4701-47-12), R S NO: 51/7, IRINGALLUR, OLAVANNA PANCHAYATH, GURUVAYOORAPPAN COLLEGE PO, PALLAZHI - 673014
1223. A M MOTORS (-47-01), SURVEY NO: 17/57, 55, AMBALAPADI, POOLADIKUNNU ,NH-66,ERANJIKKAL POST - 673001

CHALAKUDY

1224. POPULAR VEHICLES AND SERVICES LIMITED (2701--0C), SURVEY NO: 350/1,352/1,352/2,362/1,363/3,364/1,NH BYEPASS 47,PERAMBRA VILLAGE, CHALAKUDY, THRISSUR DIST.,KERALA- 680722 - 680307
PH :9072609600.
1225. BRD CAR WORLD LIMITED (--01), MURINGOOR P.O., CHALAKUDY - 680316
PH :9645176999.
1226. INDUS MOTOR COMPANY PRIVATE LIMITED (--01), SURVEY NO. 53/1, 53/2 & 55/1, PANAMBILLY COLLEGE JUNCTION, VILLAGE-PERAMBRA, POTTA, TALUKA CHALAKKUDY, DISTT. THRISSUR, PIN-680307, KERALA - 680307

CHALAPARAMBU

1227. AVG MOTORS PVT LTD (--01), VAIKOM, KOTTYAM, CHALAPARAMBU, , - 673002

CHANGANASSERY

1228. INDUS MOTOR COMPANY PRIVATE LIMITED (--01), BUILDING NO. 4/11, BLOCK NO. 4, RE-SURVEY NO. 224/1, VAZHAPPALLI WEST VILLAGE, CHANGANASSERY TOWN & TALUK, KOTTAYAM DIST.,KERALA - 686103
PH :9778699557.

CHANGARAMKULAM

1229. A M MOTORS (--01), MELE MANTHADAM, ALANKODE, P.O., CHANGARAMKULAM, MALAPPURAM DISTT, KERALA - 679585
PH :9895756008.

CHAVAKKAD

1230. BRD CAR WORLD LIMITED (--06), ORUMANAYOOR P.O.CHAVAKKAD, DISTRICT-THRISSUR - 680512
PH :9645963999.
1231. SAI SERVICE PRIVATE LIMITED (--01), SURVEY NO. 26/5, MULLANTHARA PARAMBU, OVUNGAL, KUNNAMKULAM ROAD, TALUK – GURUVAYUR, CHAVAKKAD.) - 680506
PH :9495883852.

CHAVARA

1232. SARATHY AUTO CARS (--01), SURVEY NO: 99/2, 99/21-1 & 99/21-2, OPPOSITE CHAVARA BUS STAND, NH 66, CHAVARA, KOLLAM DIST., KERALA -691584 - 691584

CHENGANNUR

1233. SARATHY AUTO CARS (--06), PRAVUMKOOD, THIRUVANVANDOOR P.O. CHENGANNUR TALUK, ALAPPUZHA (DIST) - 689124
PH :9447002647.
1234. SAI SERVICE PRIVATE LIMITED (--01), SURVEY NO. 276/2,11,13,13-2-2, NEAR BPCL PUMP AND SURVEY NO. 276/12, M C ROAD, NEAR LABHAM MAVELI STORE,CHENGANNUR PO & MUNICIPAL, CHENGANUUR VILL & TALUK, ALAPUZHA DIST., KERALA-689121 - 689121
PH :9288024220.

CHERPULASSERY

1235. KVR AUTOCARS PVT LTD (--01), SURVEY NO. 154/4, RS NO. 154/4, VILLAGE – CHERUPPALASSERY, TALUK – OTTAPPALAM, DISTRICT – PALAKKAD - 679503

CHERTHALA

1236. INDUS MOTOR COMPANY PRIVATE LIMITED (--01), OPPOSITE TO S.N. COLLEGE, S.N. PURAM P.O., KANJIKKUZHI,CHERTHALA, ALAPPUZHA-DIST. - 688552
1237. POPULAR VEHICLES AND SERVICES LIMITED (--01), RE-SURVEY NO.150/2-1,147/3, BUILDING NO.KP-18/80, N.H. KANJIKUZHI VILLAGE, CHERTHALA, ALAPPUZHA DISTT., - 688582
PH :9072530127.
1238. MAIJO MOTO (A UNIT OF GEORGE MAIJO AUTOMOBILES PVT LTD) (--01), RE SURVEY NO:121/ 20B2,BUILDING NO:28/344,CHERTHALA,ALAPPUZHA DIST, KERALA - 688524 - 688524

CHERUPUZHA

1239. KVR AUTOCARS PVT LTD (--01), SURVEY NO.191, VAYAKARRA VILLAGE, - 670511

CHINGAVANAM

1240. POPULAR VEHICLES AND SERVICES LIMITED (--01), BUILDING NO. VI 461, RE SURVEY NO. 290/9, GOMATHI JUNCTION, MAVILANGU KARA, CHINGAVANAM P.O., DISTT. KOTTAYAM, KERALA - 686531
PH :9778690817.

CHITTUR

1241. INDUS MOTOR COMPANY PRIVATE LIMITED (--01), S.NO.719/3 AND 721/1, RE SURVEY NO.671/10, VELLIYAVALLAMPPATHY VILLAGE, KOZHINJAMPARA, CHITTUR, PALAKKAD DISTT. - 678555

CHULLIMANOOR

1242. POPULAR VEHICLES AND SERVICES LIMITED (1601--16), RE-SURVEY NO. 43/7, VILLAGE-ANAND, CHULLIMANOOR TOWN, TALUKA-NEDUMANGAD, DIST. TRIVANDRUM, PIN-695541, KERALA - 695541
PH :9778690745.

COCHIN

1243. POPULAR VEHICLES AND SERVICES LIMITED (2701-27-01), PERANDOOR ROAD, PUNNAKAL, ELAMAKKARA, COCHIN - 682025
PH :9846017725.
1244. INDUS MOTOR COMPANY PRIVATE LIMITED (2702-27-02), BEHIND COMMERCIAL SALES TAX, M.G. ROAD, COCHIN, - 682015
PH :9745998040.
1245. SAI SERVICE PRIVATE LIMITED (2705-27-01), 50/1 15L, ,CHERANALLOOR ROAD,EDAPPALLY,COCHIN - 682024
PH :9645106339.
1246. SAI SERVICE PRIVATE LIMITED (2705-27-02), NH-47,,PATHADIPALAM,EDAPPALLY,COCHIN - 682024
PH :9645105057.
1247. POPULAR VEHICLES AND SERVICES LIMITED (2701-27-04), NEAR LISI HOSPITAL, OPP. IMA BLOOD BANK, COCHIN, - 682018
PH :9846298618.
1248. INDUS MOTOR COMPANY PRIVATE LIMITED (2702-27-09), PALARIVATTOM KAKANAD ROAD, KAKANAD, COCHIN, - 682030
PH :9745998013.

1249. SAI SERVICE PRIVATE LIMITED (2705--08), KETTEZHUTHUM KADAVU, INTUC JUNCTION, NETTOOR, ERNAKULAM, COCHIN (KERALA) - 682040
PH :8129496818.
1250. MAIJO MOTO (A UNIT OF GEORGE MAIJO AUTOMOBILES PVT LTD) (2709-27-01), DOOR NO.5/452, 5/452A, 5/453, OLD ELOOR ROAD, ELOOR JUNCTION, NORTH KALAMASSERY, DISTRICT - ERNAKULAM, COCHIN. - 683104
1251. INDUS MOTOR COMPANY PRIVATE LIMITED (2702-27-0L), SURVEY NO. 30-A/32, KARIKKAD ROAD, THEKKUMBHAGAM, PUTHIYAKAVU, TRIPUNITHURA, ERNAKULAM, KERALA - 682301
PH :9745992070.
1252. MAIJO MOTO (A UNIT OF GEORGE MAIJO AUTOMOBILES PVT LTD) (2709--02), PLOT NO.2/316, NH-47, MARADU VILLAGE, KANNDIKAD, NEAR SAROVARAM, KUNDANOOR, COCHIN (KERALA) - 607001
1253. POPULAR VEHICLES AND SERVICES LIMITED (2701-27-10), SURVEY NO: 162/2,162/24-2,162/25,162/3,162/1-2,162/13-2 &162/5, BUILDING NO: 33/2,33/3 & 33/4, PIPELINE ROAD, PADIVATTOM, VAZHAKALA, COCHIN, KERALA-682021. - 682021
1254. BRD CAR WORLD LIMITED (--10), OPPOSITE IOC PARKING GATE, SEA PORT AIRPORT ROAD, IRRUMPANAM, - 682024

EDAKKARA

1255. KVR AUTOCARS PVT LTD (--01), SURVEY NO. 1087/1C-91, VAZHIKADAVU VILLAGE, OOTY ROAD, MUNDA, EDAKKARA TOWN, NILAMBUR TALUK, MALAPPURAM DIST., KERALA - 679331
PH :9747020777.

EDAPPAL

1256. POPULAR VEHICLES AND SERVICES LIMITED (4702--05), KOZHIKODA ROAD, KAVILPADY, EDAPPAL, MALAPPURAM - 679582
PH :9946104680.

EDAVANNAPARA

1257. A M MOTORS (--01), SURVEY NO. 98/1, PALLIPADI,EDAVANNAPPARA- AREEKODE ROAD, CHEEKODE POST, EDVANNAPPARA, KONDOTTY TALUK, MALAPPURAM DIST., KERALA- 673645. - 673645

EDAVANNAPPARA

1258. POPULAR VEHICLES AND SERVICES LIMITED (--01), SURVEY NO. 77/16-1 & 77/2-4 ,BUILDING NO.18/152-B, CHEEKODE VILLAGE,EDAVANNAPARA KONDOTTY ROAD, CHERUVAYOOR PO, MALLAPPURAM DISTRICT, KERALA-673645 - 673645
PH :9539007323.

ETUMANOOR

1259. INDUS MOTOR (--01), 43/16-2, 43/17, 43/18, 43/3, 2, OPP. SANETTUMANOOR, KOTTYAM, PIN-686631, KERALA - 686631

FORT KOCHI

1260. SAI SERVICE PRIVATE LIMITED (--01), PLOT NO.83/1,2 OPPOSITE TO KUMAR PETROL PUMP, STATUE ROAD, CHULLIKKAL POST, FORT KOCHI - 682005
PH :9645106330.

GURUVAYUR

1261. INDUS MOTOR COMPANY PRIVATE LIMITED (2702--08), KUNAMKULLAM CHAVAKKAD ROAD, OPPOSITE CHOOLPURAM MOSQUE, GURUYOOR, THRISSUR - 680505
PH :9745998015.

IRINJALAKUDA

1262. BRD CAR WORLD LIMITED (--05), KARUPADANNA P.O., IRINJALAKUDA, THRISSUR - 680670
PH :9539006999.

IRITTY

1263. INDUS MOTOR COMPANY PRIVATE LIMITED (--02), SURVEY NO. 48, BUILDING NO. 214, PERUPARAMBA, IRITTY, KANNUR, KERALA - 670703
PH :9747554929.

IRITY

1264. POPULAR VEHICLES AND SERVICES LIMITED (--01), RE-SURVEY NO: 14/4, 11/2, NEAR JABBAR KADAVU BRIDGE, KEEZHUR VILL., PERAVOOR ROAD, IRITTY MUNICIPAL, KANNUR DIST. KERALA. - 670703
PH :7902473741.

KAIPAMANGALAM

1265. SAI SERVICE PRIVATE LIMITED (2705--07), SURVEY NO: 240/4-2 & 240/4-3, 249/5-19, 249/4A-3, 249/4B-1, 249/5-14 , 249/4B, 249/4A-4,KAIPAMANGALAM BOARD,KAIPAMANGALAM P O, THRISSUR DIST, KERALA - 680681
PH :8129496846.

KALAMASSERY

1266. INDUS MOTOR COMPANY PRIVATE LIMITED (2702--07), KALAMASSERY, ALUVA WEST, ERNAKULAM DIST, KERALA - 683106
PH :9745998012.

KALLAMBALAM

1267. POPULAR VEHICLES AND SERVICES LIMITED (--01), BUILDING NO. 5/472, NH-47, KADUVAPALLY, THOTTAKAD P.O, KALLAMBALAM, TRIVANDRUM DIST., KERALA - 695605
PH :8086078788.

KALPETTA

1268. INDUS MOTOR COMPANY PRIVATE LIMITED (4701--0C), MEENANGADI, KAKKAVAYAL P.O., NORTH KALPETTA,WAYAND - 673591
PH :9745998592.
1269. KVR AUTOCARS PVT LTD (--C1), BUILDING NOS. 363, 364, 365, 366,367,368 AND 369 CONSTRUCTED ON THE PLOT COMPRISED IN RESURVEY NOS. 719/6, 722/3, 722/22, 722/6, 722/8, 722/10, 722/21, SITUATED AT MUTTIL NORTH VILLAGE, VYTHIRI TALUK, KALPETTA SUB-DISTRICT, WAYANAD DISTRICT, KERALA. - 673122
PH :9747021902.

KANHANGAD

1270. POPULAR VEHICLES AND SERVICES LIMITED (4702--06), HIGHWAY JUNCTION,KANHANGAD SOUTH P.O .,KANHANGAD - 689641
PH :9946104685.
1271. KVR AUTOCARS PVT LTD (--02), ARANGADI, P.O. KANHANGAD, DIST. KASARGOD, - 671315
PH :9605040999.
1272. INDUS MOTOR COMPANY PRIVATE LIMITED (4701--0F), SURVEY NO.491/3A1 AND 491/3A2, AJANUR VILLAGE, KANHANGAD, HOSADURGA TALUK, KASARAGOD DISTT, KERALA. - 671541

KANJIRAPALLY

1273. AVG MOTORS PVT LTD (--01), NEW SURVEY NO. 187/2 (OLD SURVEY NO. 299/1, 299/11), KANJIRAPALLY VILLAGE & TALUKA, KOTTAYAM DISTRICT.,KERALA - 686512

KANJRAPALLY

1274. INDUS MOTOR COMPANY PRIVATE LIMITED (--02), VADAKUMBHAGAM KARAYIL, KUNNAMBHAGAM P.O. , KANJIRAPALLY - 686506
PH :9745998009.

KANNUR

1275. INDUS MOTOR COMPANY PRIVATE LIMITED (4701--0E), BALANKINAR JN., KATTAMPALLY.P.O, KANNUR - 690011
1276. KVR AUTOCARS PVT LTD (--04), CP-3-651-B, OPP. DHANRAJ TALKIES, PUTHIYATHERU, CHIRAKKAL POST, KANNUR, KERALA - 670011
PH :9656034333.
1277. POPULAR VEHICLES AND SERVICES LIMITED (4702--0F), PLOT NO.82/6A, NEAR CHARAPPURAM SREEMUTHAPPAN KAVU, KAPPAD ROAD, THAZHE CHOVVA (PO), KANNUR - 670018
PH :9846062796.
1278. INDUS MOTOR COMPANY PRIVATE LIMITED (--01), BALAN KINAR , KATTAMPALLY PO, KANNUR, KERALA - 670611

KARIKKAD (KUNNAMKULAM))

1279. BRD CAR WORLD LIMITED (--02), BRD INDUSTRIAL ESTATE,KARIKKAD, KUNNAMKULAM - 680519
PH :9995804599.

KARUNAGAPALLY

1280. SARATHY AUTO CARS (--05), K.S. PURAM,NEELIKULAM, KARUNAGAPPALLY,KOLLAM, - 690544
PH :9526691565.
1281. INDUS MOTOR COMPANY PRIVATE LIMITED (--01), SY.NO.243/1, 243/10, 243/16, 243/14, 243/15, 243/16, EDAPPALLY KOTTA JUNCTION, NEAR TITANIUM, CHAVARA POST, KARUNAGAPALLY, DISTT. KOLLAM. - 691583
PH :9745998006.
1282. SARATHY AUTO CARS (--11), SURVEY NO. 15/3, SIDCO INDUSTRIAL AREA, EDAKULANGARA PO, NEAR KARUNAGAPALLY RAILWAY STATION, KARUNAGAPALLY, KERALA. - 690562
PH :9526691565.

KASARGOD

1283. KVR AUTOCARS PVT LTD (--01), ANANGUR, VIDYANAGAR (PO), NH17, KASARGOD - 671123
PH :9747021206.
1284. POPULAR VEHICLES AND SERVICES LIMITED (4702--0D), MUNDAKULAM, CHEMMANAD (PO), KASARGOD - 671371
PH :9946104621.
1285. INDUS MOTOR COMPANY PRIVATE LIMITED (--03), 18/304A & 18/304B, SY. NO. 39/3B, RE SY. NO. 57/6,MOGRAL, MANJESHWAR TALUK, KASARAGOD, KERALA - 671541
PH :9747550747.

KATAPPANA

1286. AVG MOTORS PVT LTD (--01), PALLIKKAVALA, KATTAPPANA, IDUKKI, KERALA - 685508

KATTAPANA

1287. INDUS MOTOR COMPANY PRIVATE LIMITED (--01), KATTAPPANA-IDUKKI KAVALA, BYE PASS ROAD, KATTAPPANA, IDUKKI (DIST.). - 685508
PH :9746743460.
1288. POPULAR VEHICLES AND SERVICES LIMITED (--01), RE-SURVEY NO. 81/3, VILLAGE & TOWN - KATTAPPANA, TALUK & DIST.-IDUKKI, KERALA. - 685515
PH :9746818407.

KAYAMKULAM

1289. INDUS MOTOR COMPANY PRIVATE LIMITED (2702--05), KARIYILAKULANGARA, KAYANKULAM P.O., ALAPPUZHA DISTT. - 690572
PH :9745998005.
1290. POPULAR VEHICLES AND SERVICES LIMITED (--03), NH 47, KOTTUKULANGARA, KAYAMKULAM P.O., ALAPPUZHA DISTT. - 690502
PH :9946105601.

KODAKARA

1291. A.M. MOTORS (--01), OPPT. KODAKARA POLICE STATION, NH-544, PERINGAKULAM, KODAKARA POST, THRISSUR - 680684

KODANGALLUR

1292. SAI SERVICE PRIVATE LIMITED (2705--03), NH-17,T.K.S.PURAM.,KODUNGALLOOR - 680667 PH :9645106571.

KODUNGALLUR

1293. INDUS MOTOR COMPANY PRIVATE LIMITED (--01), RE-SURVEY NO. 116/1-6, 116/2-5, BUILDING NO. 560/A, WARD NO. VII, AALA VILLAGE, (OLD VILLAGE-SREENARAYANAPURAM), KODUNGALLUR TALUK, MADHILAKOM SRO, SANTHIPURAM PO, THRISSUR DIST., KERALA - 680008 PH :9747513444.

KODUVALLY

1294. A M MOTORS (--01), SURVEY NO:91/9, 91/10,NALLANKADY, VAVAD POST, KODUVALLY, KOZHIKODE DISTRICT, KERALA - 673572 PH :9895979023.

KOLANCHERRY

1295. SAI SERVICE PRIVATE LIMITED (--01), SURVEY NO.138/7, BLOCK NO. 47, WARD-8, KOLENCHERY TOWN, NH-85, AIKARANADU NORTH VILL., KUNNATHUNADU TALUK, ERNAKULAM DIST., KERALA-682311 - 682311 PH :7356605955.

KOLLAM

1296. POPULAR VEHICLES AND SERVICES LIMITED (1601--04), H & C COMPOUND, MUNDDACKAL, KOLLAM - 680006 PH :7594977550.

1297. INDUS MOTOR COMPANY PRIVATE LIMITED (1602--03), OLD SARATHY THEATRE, PUNALOOR ROAD, KOLLAM - 691005 PH :9745998004.

KONDOTTY

1298. INDUS MOTOR COMPANY PRIVATE LIMITED (--01), SURVEY NO. 16/1, BLOCK NO. 36 (OLD SURVEY NO. 100/1), NEDIYIRUPPU VILLAGE, KONDOTTY PO, ERNAD TALUKA, MALAPURAM DISTRICT, KERALA - 683573 PH :9746743178.

KOOTHATTUKULAM

1299. SAI SERVICE PRIVATE LIMITED (--01), EDAPUTHUSSERY BUILDING, M.C. ROAD, OPP. MARYGIRI PUBLIC SCHOOL, KOOTHATHUKULAM P.O., ERNAKULAM DT. - 686662 PH :9645106258.

1300. POPULAR VEHICLES AND SERVICES LIMITED (--01), SURVEY NO. 614/3-4, BAPUJI JUNCTION,CHORAKUZHI,M C ROAD, KOOTHATTUKULAM, MUVATTUPUZHA TALUK,ERNAKULAM DIST., KERALA - 686662 - 686662

KOPPAM

1301. A M MOTORS (--01), SURVEY NOS: 331/3-6, 331/3-10, NEAR SALAFIYYA TRAINING COLLEGE, PERINTHALMANNA-PATTAMBI ROAD, KARINGANDU, VILAYUR POST, KOPPAM, PALLAKKAD DIST., KERALA-679309 - 679309 PH :9048666635.

KOTHAMANGLAM

1302. POPULAR VEHICLES AND SERVICES LIMITED (2701--0B), NEAR BSNL OFFICE, THANGALAM, KOTOHAMANGALAM, KERALA - 686691 PH :9846027990.

1303. INDUS MOTOR COMPANY PRIVATE LIMITED (--03), PALAKKADAN BUILDING,CHANKLAM,KOTHAMANGALAM - 686691 PH :9745998479.

KOTTAKKAL

1304. INDUS MOTOR COMPANY PRIVATE LIMITED (4701--09), NEAR MATHRUBHUMI PRESS, P.O. KOTTAKKAL, MALAPPURAM DIST, - 676503 PH :9745998017.

1305. POPULAR VEHICLES AND SERVICES LIMITED (4702--03), NH-17, ,CHANDAPARAMBU, ,RANBATHANI P.O, MALAPPURAM, KOTTAKAL - 676510 PH :9946104631.

KOTTARKKARA

1306. POPULAR VEHICLES AND SERVICES LIMITED (--01), MYLOM, MC ROAD, KOTTARAKKARA, DISTT-KOLLAM, KERELA - 691531 PH :8086073466.

1307. SARATHY AUTO CARS (--01), WARD NO.40, MELILLIA PANCHAYATH, IPPALLOOR LOWER KARIKAM, KOTTARKARA DISTT. KOLLAM (KERALA) - 691531 PH :9847423365.

1308. INDUS MOTOR COMPANY PRIVATE LIMITED (--01), RE SURVEY NO.207/3-2, KIZHAKEKKARA MURIYIL, KNS HOSPITAL JUNCTION, KOTTARAKKARA VILLAGE AND TALUKA, KOLLAM DISTT., - 691531 PH :9747562299.

1309. POPULAR VEHICLES AND SERVICES LIMITED (--02), BUILDING NO. MP/20/749,20/426, 20/748, INCHAKADU, KALAYAPURAM VILLAGE, MYLOM PANCHAYATH, KOTTARAKKARA TALUKA, KOLLAM DISTRICT, KERALA- 691560 - 691560 PH :8086073466.

1310. INDUS MOTOR COMPANY PRIVATE LIMITED (--02), RE-SURVEY NO.141/3-4,142/1-2,15-16,143/1-2,143/2,143/15-2,143/15-2-2, BEARING NOS. 25/36 & 38, KOTTARAKKARA VILLAGE, KOTTARAKKARA TALUK, KOLLAM DISTRICT, KERALA- 691506 - 691506 PH :9747562299.

KOTTAYAM

1311. AVG MOTORS PVT LTD (--01), ERAYILKADAVU, KOTTAYAM - 686001 PH :7510982222.

1312. INDUS MOTOR COMPANY PRIVATE LIMITED (2702--04), MULANKUZHA JN., NATTAKOM P.O., KOTTAYAM , KERALA - 686013 PH :9745998148.

1313. POPULAR VEHICLES AND SERVICES LIMITED (--01), NEAR ST. THOMAS CHURCH, S.H. MOUNT, P.O, KOTTAYAM - 686006 PH :8086073454.

1314. INDUS MOTOR COMPANY PRIVATE LIMITED (2702--0C), MANIPPUZHA, NATTAKOM P.O.,KOTTAYAM - 686013 PH :9745998007.

KOZHENCHERRY

1315. AVG MOTORS PVT LTD (--03), KOZHENCHERRY, COLLEGE JUNCTION, DISTRICT-PATHANAMTHITTA, - 689641 PH :9446092995.

1316. SAI SERVICE PRIVATE LIMITED (--01), SURVEY NO: 315/15-B & 315/15-C,TB JUNCTION, NEAR HP PETROL PUMP, KOZHENCHERY, PATHANAMTHITTA, KERALA - 689641. - 689641

KUNNAMANGALAM

1317. BIMAL AUTO AGENCY (--01), SURVEY NO 268/6, D.NO 6/247 ,KUNNAMANAGALAM, KERALA - 673571

KUNNAMKULAM

1318. POPULAR VEHICLES AND SERVICES LIMITED (2701--07), CHOONDAL,TRISSUR ROAD, KUNNAMKULAM, TRISSUR DIST - 680502 PH :9946105695.

KUTTIYADI

1319. A M MOTORS (--01), KUTTIYADI-PERAMBRA ROAD, PARAKKADAVU, PALERI POST, KUTTIYADI - 673508

1320. INDUS MOTOR COMPANY PRIVATE LIMITED (--01), CHERIYAKUMBALAM, PARAKADAVU,KUTTIYADI, - 673508

LAKKIDI PERUR

1321. A M MOTORS (--01), 217/7, 217/2, 278/2, 278/1, PALAPPURAM, P.O. OTTAPPALAM, LEKKIDI PERUR DISTT. PALAKKAD, - 679302

MAILLATTY

1322. KVR AUTOCARS PVT LTD (--03), CHOWKI, MAILLATTY(P.O.), (VIA) UDUMA, POINACHI, KERALA - 671319 PH :9747021026.

MALAPPURAM

1323. A M MOTORS (--01), VARANGODE, DOWNHILL, MALAPURAM, - 676519 PH :9895705325.

MALLAPALLY

1324. INDUS MOTOR COMPANY PRIVATE LIMITED (--01), THOPPIL COMPLEX, MALLAPPALLY KOTTAYAM RD, MALLAPPALLY WEST, MALLAPPALLY (KERALA) - 689585 PH :9747541400.

MANATHAVADY

1325. INDUS MOTOR COMPANY PRIVATE LIMITED (--01), SURVEY NO. 1/2A1, A1, B1, RY 1/210, 1/99, MYSORE ROAD, CHETTAPALAM, MANATHAVADY CITY & TALUK, WYANAD DIST., KERALA. - 670645 PH :9745997002.

MANJARI

1326. POPULAR VEHICLES AND SERVICES LIMITED (--0E), NARUKARA VILLAGE, RAJIV GANDHI BYEPASS JN., THRUKKAL, MANJERI (KERALA) - 676121 PH :8589992406.

MANJERI

1327. A M MOTORS (--05), THURAKKAL BYEPASS, MANJERI, MALAPURAM, KERALA - 676121 PH :9895756035.

1328. KVR AUTOCARS PVT LTD (--01), CH BYE PASS ROAD, MANJERI, MALAPPURAM, KERALA - 676123 PH :9747020801.

MANNARKAD

1329. A M MOTORS (--07), NH-213, MANNARKAD, DIST.-PALAKKAD - 678582 PH :9895979048.

MANNARKKAD

1330. INDUS MOTOR COMPANY PRIVATE LIMITED (2702--0K), ANAKATTY ROAD, AANDIPPADAM, NELLIPPUZHA-PO. MANNARKAD,KERALA - 678583 PH :9745995946.

MAVELIKARA

1331. POPULAR VEHICLES AND SERVICES LIMITED (--02), KONNAYIL SUVAKO INDUSTRIAL COMPLEX,,SHED A-1,, KOLLAKADAVU INDUSTRIAL ESTATE, KOCHAL MOODU, KALLIMEL P.O.,, MAVELIKKARA, KERALA - 690570 PH :9400052338.

1332. INDUS MOTOR COMPANY PRIVATE LIMITED (--01), SURVEY NO. 135/1/A, RE-SURVEY NO. 28/52, NEAR PRAYIKKARA, MAVELIKKARA VILLAGE & TALUK, ALAPUZHA (ALLEPPEY) DISTRICT, KERALA – 690 101. - 690101
1333. POPULAR VEHICLES AND SERVICES LIMITED (--10), BUILDING NO. 10/115-A, WARD NO. 10, CHENNITHALA VILL. AND TOWN, SHANTHIVANAM JUNCTION, CHERUKOLE P.O., MAVELIKKARA TALUK, ALAPPUZHA DIST., KERALA- 690104. - 690104
PH :9778690833.

MORAYUR

1334. A M MOTORS (--01), SURVEY NO. 328/1, VILLAGE – MORAYUR, VALENCHERY, DISTRICT – MALAPPURAM, KERALA. - 673642
PH :8086526666.

MUVATTAPUZAH

1335. INDUS MOTOR COMPANY PRIVATE LIMITED (--01), NH-49, MUVATUPUZHA KODAMANGALAM ROAD, NEAR R.K. HOSPITAL, MUVATUPUZHA, ERNAKULAM DIST - 686661
PH :97459998011.
1336. POPULAR VEHICLES AND SERVICES LIMITED (2708--02), MUTHUKALLU JUNCTION,PERUMPALLUR P.O., MUVATTUPUZHA, KERALA - 686673
PH :7356988840.

NADAPURAM

1337. A M MOTORS (--01), NADAPURAM-THALASSERY ROAD, , PERODE POST, NADAPURAM, KOZHIKODE, KERALA - 673506

NEDUMANGAD

1338. POPULAR VEHICLES AND SERVICES LIMITED (--01), RE-SURVEY NO.- 855/29, 855/14/1 (OLD SURVEY NO. 1583/1), KARIPPUR VILLAGE, NEDUMANGAD TALUK, TRIVANDRUM DIST.,KERALA-695541. - 695541
PH :9846036696.

NEYATTINKARA

1339. POPULAR VEHICLES AND SERVICES LIMITED (--15), BUILDING NO. 11/562, KP-IX-843, NH 47, KOTTAMOM , KOLLAYIL PANCHAYAT, PANVEL - KOCHI - KANYAKUMARI HIGHWAY, KOTTAMOM, NEYYATTINKARA, TRIVANDRUM, KERALA-695122 - 695122
PH :9946104602.

NEYYANTTINKARA

1340. INDUS MOTOR COMPANY PRIVATE LIMITED (--01), INDUS MOTOR CO. PVT. LTD., OLD M.V THEATRE, NEAR KSRTC BUS STATION, NEYYATINKARA, DIST. TRIVANDRUM - 695121
PH :9747544500.

NILAMBUR

1341. INDUS MOTOR COMPANY PRIVATE LIMITED (4701--0A), MINERVA JUNCTION, NILAMBUR , KERALA - 679329
PH :9745998396.
1342. INDUS MOTOR COMPANY PRIVATE LIMITED (4701--0D), MANAVEDHAM HIGH SCHOOL ROAD, CHANDAKUNNU - NILAMBUR PO, NILAMBUR, MALAPURAM DIST. - 679329
PH :9745998396.
1343. POPULAR VEHICLES AND SERVICES LIMITED (--01), RE-SURVEY NO: 6/1 BLOCK NO. 76, CHEMMARAN, NADUVATH PO, WANDOOR ROAD,NILAMBUR, MALAPPURAM DIST., KERALA - 679328
PH :7736094999.
1344. A M MOTORS (--01), NILAMBUR MYSORE ROAD, JYOTHIPADI, NILAMBUR - 679329

NILAMEL

1345. INDUS MOTOR COMPANY PRIVATE LIMITED (--01), SURVEY. NO. 195/10, 195/3-1-2, 195/3-2-1, 195/8, 195/14, 195/9-1, 195/11-1, BLOCK NO. 32, ATTINGAL MUNCIPALITY, PAZHAYAKUNNAMEL VILLAGE, CHIRAYINKIL TALUK, (BORDER OF NILAMEL TOWN), TRIVANDRUM DIST., KERALA - 695601
PH :9745993331.
1346. POPULAR VEHICLES AND SERVICES LIMITED (--01), BUILDING NO. 10/279 TO 288, M. C. ROAD, KANNANCODU, NILAMEL PO, KOLLAM (DIST.), KERALA- 691535 - 691535
PH :8714606483.

OTTAPALAM

1347. INDUS MOTOR COMPANY PRIVATE LIMITED (--01), BUILDING NO.23/667, 23/669, PALAKKAD-OTTAPPALM ROAD, OTTAPPALAM VILLAGE, OTTAPPALAM TALUKA, PALAKKAD DISTT., KERALA. - 679101
PH :9747544454.

PALA

1348. POPULAR VEHICLES AND SERVICES LIMITED (--04), 12TH MILE,PALA-PONKUNNAM ROAD,PALA - 686575
PH :9072609475.
1349. INDUS MOTOR COMPANY PRIVATE LIMITED (--05), OPP. ALPHONSA COLLAGE ARUNAPURAM(PO), PALA, KOTTAYAM - 686574
PH :9745998878.
1350. AVG MOTORS PVT LTD (--01), SURVEY NO.670/1, BLOCK-21, LALAM VILLAGE, ANTHINADU MEENANCHIL, PALA, KOTTAYAM DIST. - 686651
PH :9447137246.
1351. INDUS MOTOR COMPANY PRIVATE LIMITED (--07), SURVEY NO. 176, BLOCK NO. 16, HIGHWAY JUNCTION, ETTUMANOOR-POOJAR HIGHWAY, CHERPUNKAL, PALA, KOTTAYAM DISTRICT - 686584
PH :9747516934.

PALAKKAD

1352. POPULAR VEHICLES AND SERVICES LIMITED (2701--09), OPP. PALANA HOSPITAL,KODUVAYOOR ROAD,KINASSERY P.O.,PALAKKAD - 678707
PH :9946105613.
1353. INDUS MOTOR COMPANY PRIVATE LIMITED (2702--0G), VADAKKUMURI-NH-47, KANNADI, KUZHALMAMMAM (P.O.), PALAKKAD. - 678701
PH :9745998590.
1354. INDUS MOTOR COMPANY PRIVATE LIMITED (--01), DOOR NO: 5/366 & 367, NH 47, KOOTUPATHA, CHANDRANAGAR POST, PALAKKAD - 678007
PH :9747519500.

PANDIKKAD

1355. A M MOTORS (--01), SURVEY NOS: 333/2-2, 333/3-2,CHOORAKKAVU, PERINTHALMANNA ROAD, NEAR INDIAN OIL PETROL PUMP, PANDIKKAD TOWN & POST, MALAPPURAM DISTRICT, KERALA - 676521
PH :9539999570.

PARAPPANANGADI

1356. A M MOTORS (--01), SURVEY NO.66/6, 66/7, KODAPPADI, POST-CHETTIPPADY, PARPANGADI, MALAPPURAM. - 676319
PH :9895900466.

PARASSALA

1357. SARATHY AUTO CARS (--01), SURVEY NO.21/14, BUILDING NO. 717.C, NEAR SARASWATHY HOSPITAL, PARVATHIYANVIL - 695502

PARAVUR

1358. POPULAR VEHICLES AND SERVICES LIMITED (--01), SURVEY NO. 340/1-76,77,78, NEAR HP PETROL PUMP, PARAVUR-MANJALI MAIN ROAD, MANNAM PO, NORTH PARAVUR MUNICIPAL, ERNAKULAM DIST. 683520, KERALA. - 683520
PH :9072609638.

PATHANAMTHITTA

1359. AVG MOTORS PVT LTD (--02), JUNNUGAPADY, MYLAPRA ROAD, PATHANAMTHITTA, - 689671
PH :9446002987.
1360. INDUS MOTOR COMPANY PRIVATE LIMITED (1602--13), KUMBAZHA, PATHANAMTHITTA - 689653
PH :9745998008.
1361. POPULAR VEHICLES AND SERVICES LIMITED (--05), T.K. ROAD, NEAR COLLECTORATE,PATHANAMTHITTA - 689645
PH :9539009734.
1362. INDUS MOTOR COMPANY PRIVATE LIMITED (--12), SURVEY NO. 11-13/12(1), KARIMPANKUZHY ROAD, NEAR SAROJ GAS AGENCY, MAKKANKUNNU, PATHANAMTHITTA, KERALA. - 689645
PH :9745999858.
1363. POPULAR VEHICLES AND SERVICES LIMITED (--11), BUILDING NO 244 / A, CHURULIKODE PO, PULIMOODU JUNCTION,PATHNAMTHITTA TOWN & DIST.,KOZHENCHERY TALUKA, KERALA-689643. - 689643

PATHANAPURAM

1364. SARATHY AUTO CARS (--01), SURVEY NO. 3060/7-4, 3060/7-5,SALEMPURAM, KAYAMKULAM - PUNALUR ROAD, PATHANAPURAM, KOLLAM DIST., KERALA – 689695 - 689695

PATHIRAPPALLY

1365. POPULAR VEHICLES AND SERVICES LIMITED (--02), BUILDING NO. X/832 TO 834, X/837 TO 838, OPP .UDAYA STUDIO, PATHIRAPALLY TOWN, AMBALAPUZHA TALUK, NH-47, ALAPPUZHA DIST., KERALA-688521. - 688521
PH :9778698169.

PATTAMBI

1366. A M MOTORS (--04), SHORANUR ROAD, PATTAMBI, DISTRICT-PALAKKAD, - 679306
PH :9567866059.
1367. INDUS MOTOR COMPANY PRIVATE LIMITED (2702--0B), PERINTHALMANNA ROAD, THEKKUMURI, PATTAMBI - 679303
PH :9745998295.
1368. A M MOTORS (--09), CHERPULASSERY ROAD, KOOMBAN KALLU, KARIMPULLI, MELE PATTAMBI POST, PALAKKAD DISTT., KERALA. - 679306
PH :9567866059.

PAYANNUR

1369. POPULAR VEHICLES AND SERVICES LIMITED (4702--04), N H 17,,EZHILODE P O, ,,PAYYANUR - 670309
PH :9946104701.
1370. POPULAR VEHICLES AND SERVICES LIMITED (--01), SY. NO. 218/1, CHERUTHAZHAM VILLAGE, EZHILODE (NEAR COLONY BUS STOP), PAYANNUR-KANNUR NH, PAYANNUR TALUK, KANNUR DISTRICT, KERALA – 670 309. - 670309
PH :9946104701.

PAYYANUR

1371. INDUS MOTOR COMPANY PRIVATE LIMITED (--01), SURVEY NO.-289/117, 290/105, KARIVELLUR PERALAM GRAM PANCHAYAT (NEAR PALATHARA BRIDGE), PAYYANUR TALUK, KANNUR DISTRICT, KERALA-PIN-670521. - 670521
PH :9745998204.

PEREMBRA

1372. POPULAR VEHICLE & SERVICE (--01), NO. 62/1,KOOTHALI VILLAGE, MOORIKUTHI, PERAMBRA TOWN, KOYILANDY TALUKA, CALICUT - 673525

PERINTHALMANA

1373. A M MOTORS (--03), NEAR FIRE STATION, HOSPITAL ROAD, PERINTHALMANNA - 679322
PH :8129818235.
1374. KVR AUTOCARS PVT LTD (--01), SURVEY NO. 87/8-15, CALICUT ROAD, NEAR ITC, THIRURKAD, PERINTHALMANNA - 679351
PH :9747020573.
1375. KVR AUTOCARS PVT LTD (--06), OOTY ROAD, PERINTHALMANNA, MALAPPURAM(DT.), KERALA - 679322
PH :9747020837.

PERUMBAVOOR

1376. SAI SERVICE PRIVATE LIMITED (2705--04), M.C.ROAD,PERUMBAVOOR,ERNAKULAM DIST,KERALA - 683542
PH :7034258335.
1377. INDUS MOTOR COMPANY PRIVATE LIMITED (--01), SURVEY NO. 72/2-3, 72/3-3, TALUK - KUNNATHUNADU, VILLAGE - RAYAMANGALAM, SUB DIST.-PERUMBAVOOR, DIST.ERNAKULAM. - 683541
PH :9747591803.

PIROVAM

1378. SAI SERVICE PRIVATE LIMITED (--01), SUVEY NO. 788/1O-2-5, NEAR PIRAVOM GOVT. HOSPITAL, PIRAVOM TOWN & MUNICIPALITY, MUVATTUPUZHA TALUK, ERNAKULAM DIST., KERALA. - 686664
PH :9645106198.

PUNALUR

1379. SARATHY AUTO CARS (--03), NH-208, Q.S. ROAD,ELAMPAL POST,PUNALUR, KOLLAM DIST - 691322
PH :9744400265.
1380. INDUS MOTOR COMPANY PRIVATE LIMITED (--01), SY. NO. 48/1/42, OLD, SY. NO. 231A/3324, (OLD RAMRAJ TILES FACTORY), THALICODE, PATHANAPURAM TALUK, PUNALUR ANCHAL ROAD. - 691305
PH :9747638885.

QUILANDY

1381. INDUS MOTOR COMPANY PRIVATE LIMITED (--01), BUILDING NO.13/53 A, CHENGOTTUKKAVE VILLAGE, QUILANDY, KOZHIKODE DISTT. - 673306

QUILON

1382. SARATHY AUTO CARS (--01), NH-47 BYE PASS,AYATHIL(P.O.),QUILON - 691017
PH :9744552265.
1383. SARATHY AUTO CARS (--12), BUILDING NO. 15/620, SURVEY NO. 234/1, 235/2, SITHARA JUNCTION, ADICHANALLOOR VILLAGE, KOTTIYAM PO, KOLLAM DIST., KERALA. - 691571
PH :9847936165.
1384. SARATHY AUTO CARS (--13), SURVEY NO. 431/13-42, NEAR SN PUBLIC SCHOOL, VADAKKEVILA, AYATHIL, KILLIKLLOOR PO, PUNTHALATHAZHAM-PALATHARA ROAD, KOLLAM, KERALA - 691004
PH :8606430765.

RAMANATTUKKARA

1385. A M MOTORS (--06), NEAR RED CRESCENT HOSPITAL, FEROKE, CHUNGAM, CALICUT DISTRICT, RAMANATTUKARA, - 673632
PH :9567866144.

RANNI

1386. INDUS MOTOR COMPANY PRIVATE LIMITED (--06), CHELLAKKAD-PO, PATHANAMTHITTA(DISTRICT), RANNI - 689677
PH :9745998737.
1387. POPULAR VEHICLES AND SERVICES LIMITED (--01), SURVEY NO:417/3, 417-10, 417/16-2-1 & 41, BLOCK NO:09,PAZHAVANGADI VILLAGE, RANNI - 689672

SASTHAMKOTTAH

1388. INDUS MOTOR COMPANY PRIVATE LIMITED (1602--09), NO. SP IX/661, 662, 663, KADAPUZHA ROAD, PORUVAZHY P.O., BHARANIKUVU, SASTHAMKOTTAH, KOLLAM – , KERALA - 690520
PH :9745998849.

SHORNUR

1389. POPULAR VEHICLES AND SERVICES LIMITED (2701--0E), PALAKKAD PATTAMBI ROAD, KULAPPULLY JUNCTION, VADANAMKURUSSI, SHORNUR - 679124
PH :8589992432.

SULTHAN BATHERY

1390. POPULAR VEHICLES AND SERVICES LIMITED (--01), SURVEY NO. 421/5, 421/6, BLOCK NO. 22, KRISHNAGIRY VILLAGE, PATHIRIPALAM, KOLAGAPPARA (PO), TALUK & TOWN - SULTHAN BATHERY, WAYANAD DIST., KERALA. - 673591
PH :7594977551.

TALIPARAMBA

1391. INDUS MOTOR COMPANY PRIVATE LIMITED (--01), RE SURVEY 53/4, THRICHAMBARAM THALIPARAMBA, KANNUR - 670141

TELLICHERRY

1392. INDUS MOTOR COMPANY PRIVATE LIMITED (4701--04), TEMPLE GATE, MAKKOOTAM, THALAYI, TELLICHERRY , KERALA - 670102
PH :9747520100.

THALASSERY

1393. INDUS MOTOR COMPANY PRIVATE LIMITED (--01), NETTUR POST, KODUVALLY, THALASSERY, KANNUR DISTRICT - 670105
PH :9745998022.

THALAYOLAPARAMBU

1394. INDUS MOTOR COMPANY PRIVATE LIMITED (2702--0J), THODUPUZHA ROAD, THALAYOLAPARAMBU, VAIKOM(TALUK), DISTRICT-KOTTAYAM, KERALA - 686605
PH :9746743003.

THAMARASSERY

1395. INDUS MOTOR COMPANY PRIVATE LIMITED (--01), RE-SY. NO. 44/5A, 44/6, RAROTH VILLAGE, (NEAR CHUNGAM), THAMARASSERY PANCHAYAT & TALUK, CALICUT DIST., KERALA. - 673573
PH :9747553362.
1396. POPULAR VEHICLES AND SERVICES LIMITED (--10), SURVEY NO.43/4 BLOCK NO:005 , RAROTH VILLAGE , THAMARASSERY TALUK , KOZHIKODE DISTRICT, KERALA - 673573
PH :9846397060.

THIRUVALLA

1397. AVG MOTORS PVT LTD (--01), M.C ROAD, PERUMTHURUTHI, THIRUVALLA , PATHANAMTHITTA DISTT - 689107
PH :9446323999.
1398. POPULAR VEHICLES AND SERVICES LIMITED (--06), KAVUMBHAGOM P.O, THIRUVALLA, PATHANAMTHITTA (DIST.), KERALA - 689103
PH :8086073489.

THODUPUZHA

1399. INDUS MOTOR COMPANY PRIVATE LIMITED (--04), PALA ROAD, THODUPUZHA - 685584
PH :9745998631.
1400. POPULAR VEHICLES AND SERVICES LIMITED (--01), SY.NO.124/7A-1, 124/7A-2, THODUPUZHA EHLOOR MAIN ROAD, VILLAGE & TOWN, THODUPUZHA, DISTT. IDUKI - 685585

THRISSUR

1401. POPULAR VEHICLES AND SERVICES LIMITED (2701--05), KUNNATHUMKARA, PARAVATTANI, THRISSUR, KERALA - 680655
PH :6282306495.
1402. SAI SERVICE PRIVATE LIMITED (2705--06), 17/30,POOTHOLE,THRISSUR,KERALA - 680004
PH :9645105051.
1403. BRD CAR WORLD LIMITED (--01), NH 47,BYE PASS,KONIKARRA POST,THALORE, THRISSUR - 680031
PH :9995807141.
1404. INDUS MOTOR COMPANY PRIVATE LIMITED (2702--0D), JYOTHI COMPLEX, GURUVAYOOR ROAD, WEST FORT, THRISSUR - 680004
PH :9745998014.
1405. BRD CAR WORLD LIMITED (--07), GURUVAYOOR ROAD, PUNKUNNAM P.O., PUZHAKKAL, THRISSUR - 680002
PH :9746476529.

THRITHALLUR

1406. BRD CAR WORLD LIMITED (--04), PO-THRITHALLUR, NH-17, THRITHALLUR THRISSUR - 680619
PH :9539197888.

TIRUR

1407. A M MOTORS (--02), SATELLITE AUTO WORKS, PAYYANAGADI POST, TIRUR - 676101
PH :9995879706.
1408. KVR AUTOCARS PVT LTD (--05), T.P 7/204-B, TANUR ROAD,MOOCHIKKAL, MEENADATHUR P.O., TIRUR, DISTRICT-MALAPPURAM, KERALA - 676307
PH :9747020673.
1409. A M MOTORS (--08), THALAKKADATHOOR PO, MALAPPURAM,MALAPPURAM DISTT. - 676103
1410. INDUS MOTOR COMPANY PRIVATE LIMITED (--01), SURVEY NO. 119/3, 4, 9A, OLD MODERN PHARMACEUTICALS PVT. LTD., THRIKANDIYOOR VILLAGE, CHAMBAVATTOM ROAD, TIRUR, KERALA. - 676105
PH :9747518883.
1411. KVR AUTOCARS PVT LTD (--07), 829/A, THANUR ROAD, MOOCHIKKAL, MEENADATHUR PO, TIRUR, MALAPPURAM DIST - 676103

TRIPPUNITHURA

1412. SAI SERVICE PRIVATE LIMITED (2705--05), HILL PALACE ROAD,KARINGACHIRA,COCHIN - 682301
PH :9645105067.

TRIPRAYAR

1413. POPULAR VEHICLES AND SERVICES LIMITED (2701--08), SURVEY NO. 296/5,8, 296/9, 296/9-1, NATTIKA VILLAGE, NEAR CIVIL STATION, POLY JUNCTION, TRIPRAYAR TOWN, THRISSUR TALUK & DISTRICT, KERALA-680566 - 680566
PH :9846699245.

TRIVANDRUM

1414. INDUS MOTOR COMPANY PRIVATE LIMITED (1602-16-01), T.C. 24/885 THYCAUD P.O., THYCAUD P.O., METTUKUDA, TRIVANDRUM - 695014
PH :9745998001.
1415. POPULAR VEHICLES AND SERVICES LIMITED (1601-16-01), C.I.T. ROAD, KILLIPALAM, KARAMANA P.O, TRIVANDRUM - 695002
PH :9946104601.

1416. INDUS MOTOR COMPANY PRIVATE LIMITED (1602-16-02), NH BYE PASS ROAD, VEMPALAVATTOM, TRIVANDRUM - 695029
PH :9745998003.
1417. SARATHY AUTO CARS (1607-16-02), KOVALAM BYEPASS,SN NAGAR, MANACAUD (PO), TRIVANDRUM - 695009
PH :9947270665.
1418. INDUS MOTOR COMPANY PRIVATE LIMITED (1602-16-05), G.G. MEDICAL COLLAGE P.O., MURINJAPALAM, TRIVANDRUM, MURINJAPALAM, , - 695011
PH :9745998002.
1419. POPULAR VEHICLES AND SERVICES LIMITED (1601-16-05), OPP. ST. JUDE CHURCH,CIT ROAD, KILLIPPALAM,TRIVANDRUM - 695002
PH :9846298610.
1420. INDUS MOTOR COMPANY PRIVATE LIMITED (1602-16-08), NEAR MUSLIM JUMA MASJID, MUKKAM PLAMOODE, VATTAPPARA-MANNANTHALA M C ROAD, VATTAPPARA PO, MANNANTHALA,TRIVANDRUM - 695028
PH :9747540100.
1421. INDUS MOTOR COMPANY PRIVATE LIMITED (1602-16-11), SURVEY NO.3, TC-7/1069(9), MARUTHAMKUZHI, SASTHAMANGALAM VILLAGE, PTP NAGAR ROAD, KANJIRAMPARA P.O., TRIVANDRUM - 695030
PH :9747508822.
1422. SARATHY AUTO CARS (1607--03), 77/2-11, NEMOM VILLAGE, PAPPANAMCODU INDUSTRIAL AREA, TALUKA AND DISTRICT-THIRUVANANTHPURAM, KERALA.
PH :9961665865.
1423. POPULAR VEHICLES AND SERVICES LIMITED (1601-16-12), RE-SURVEY NO. 26/4-1, MANANTHALA STADIUM ROAD, NEAR SURYAPRABHA AUDITORIUM, ULOOR VILLAGE, MANANTHALA, TRIVANDRUM DIST., KERALA. - 695015
PH :9846498605.
1424. POPULAR VEHICLES AND SERVICES LIMITED (1601-16-17), BUILDING NO. 13/632,632-A, 633,633-A1,633-A2,634-636, 6TH MILE STONE, VAZHAYILA PO, PEROORKADA, THIRUVANANTHAPURAM, KERALA - 695521 - 695521
PH :9288023313.
1425. SARATHY AUTO CARS (1607-16-01), SURVEY NO. 2448/4, VILL. MUTTATHARA, NH BYE PASS ROAD, KALLUMOOD JN., VALLAKADAU PO, ENCHAKKAL, THIRUVANANTHAPURAM, KERALA-695008 - 695008
PH :9562416665.

UPPALA

1426. POPULAR VEHICLES AND SERVICES LIMITED (4702--0A), N.H.17, KAIKAMPA, UPPALA P.O., KASARGOD (KERALA) - 671322
PH :8086078864.
1427. KVR AUTOCARS PVT LTD (--01), NH 17, BANDIYODE, MANGALAPADI (PO), UPPALA, KASARGOD DISTT.,KERALA - 671324
PH :9526021876.

VADAKARA

1428. INDUS MOTOR COMPANY PRIVATE LIMITED (4701--07), BYE PASS JN,VATAKARA-673104,CALICUT, - 673104
PH :9745998021.
1429. POPULAR VEHICLES AND SERVICES LIMITED (--01), NEAR MADAPPALLY GOVT. COLLEGE, MADAPPALLY, P.O. VADAKARA, KOZHIKODE (KERALA) - 673102
PH :8943345935.

VALENCHARRY

1430. A M MOTORS (--01), SURVEY NO. 132/4, KOLAMANGALAM, PERINTHALMANNA ROAD, VALANCHERY, DIST.-MALAPPURAM. - 676552
PH :9745986666.

VARAKALA

1431. SARATHY AUTO CARS (--01), SURVEY NO.7, PALLACHIRA, VARKALA, CHIRAYANKEEZHU TALUKA,THIRUVANATHAPURAM DISTRICT, KERALA-695143 - 695143

VETTICHIRA

1432. KVR AUTOCARS PVT LTD (--03), AP IV, 75A TO G, NH-17, CHUNKAM, DIST. MALAPPURAM, VETTICHIRA, - 676552
PH :9747020023.

WADAKKANCHERY

1433. BRD CAR WORLD LIMITED (--03), VAZHAKODE, CHELAKARA ROAD, MULLURKARA P.O., WADAKKANCHERY, THRISSUR DIST - 680583
PH :9567869403.

LEH-LADAKH

LEH

1434. DRUK AUTO ZONE (--01), AIRPORT ROAD, LEH (LADAKH), DISTT. LADAKH, LEH - 194101
PH :8082800205.

MADHYA PRADESH

AGAR

1435. UNITARA MOTORS PVT LTD (--01), 27, UJJAIN ROAD, NEAR MARKETING FUEL STATION, AGAR, MADHYA PRADESH (465669) - 465669
PH :9575650883.

ALIRAJPUR

1436. RUKMANI MOTORS PVT LTD (--01), WARD NO 1, JHABUA ROAD, ALIRAJPUR, MADHYA PRADESH, MP - 457887
PH :8889676035.

ALOT

1437. PATEL MOTORS (INDORE) PVT LTD (--01), IN FRONT OF VIP COLONY, STATION ROAD, ALOT, DIST : RATLAM
MADHYA PRADESH - 457114 - 457114

AMLAHA

1438. RAJRUP MOTORS JUNCTION (A UNIT OF RMJ MOTORS PVT LTD) (--01), INDORE ROAD AMLAHA - 466113

ANUPPUR

1439. SHUBH MOTORS PVT LTD (--01), NEAR HDFC BANK, TEHSIL ROAD, ANNUPUR - 484224

ASHOK NAGAR

1440. PREM MOTORS PVT LTD (--02), SURVEY NO. 67/2/3, SINGAKHEDI HOUSE GUNA BYPASS NEAR RAJ MATA CIRCLE, ASHOKNAGAR, MADHYA PRADESH. - 473331
PH :9926809856.

ASHTA

1441. JEEWAN MOTORS PVT LTD (--01), KHASRA NO.111/1 NEAR RELIANCE PETROL PUMP, BHOPAL ROAD, ASHTA, DISTT. SEHORE (M.P.) - 466001

BADARWAS

1442. NIKUNJ MOTORS (A UNIT OF RSKS AUTOMOTIVES PVT LTD) (--01), SUMELA HIGHWAY, BADARWAS, DISTT. SHIVPURI, - 473885

BADNAWAR

1443. PATEL MOTORS (INDORE) PVT LTD (--01), KHASRA NO. 2194/1, BADNAGAR ROAD, BADI CHOUPATI, OPPOSITE BSNL TOWER, BADNAWAR, DISTT. - DHAR, MADHYA PRADESH. - 454660

BADWAH / BARWAHA (BOTH NAMES ARE OK)

1444. NIMAR MOTORS PVT LTD (--05), NIRMAL COMPLEX , INDORE ROAD , BARWAH - 451001

BAGH (DISTRICT - DHAR)

1445. RUKMANI MOTORS PVT. LTD. (--01), NEAR BAGHESHWARI MANDIR,, KUKSHI ROAD,BAGH, - 454221

BAHORIBAND

1446. MAA GAYATRI AUTOMOBILES (A UNIT OF MAA GAYATRI AGENCIES PVT LTD) (--01), OPP GRAIN MARKET, BAHORIBAND, DIST. - KATNI, MADHYA PRADESH - 483330

BALAGHAT

1447. KAMTHI MOTORS LLP (--01), IN FRONT OF AURAM CITY, DIST.BALAGHAT, MADHYA PRADESH - 481001

BARELI

1448. RAJRUP MOTORS JUNCTION (A UNIT OF RMJ MOTORS PVT LTD) (--01), SURVEY 423/2, VILLAGE KAMTON, NH 12, BARELI, RAISEN, MADHYA PRADESH. - 464668
PH :7909903922.

BARHI

1449. SHUBH MOTORS PVT LTD (--01), 1286/2, BARHI, DIST. - KATNI, MADHYA PRADESH - 483770
PH :9752546255.

BARI

1450. SRISATYASAI AUTOMOBILES PVT LTD (--01), WARD NO.12,,IN FRONT OF JANPAD, PANCHAYAT OFFICE,,BARI, PIN-464665, MAD - 464665

BARNAGAR

1451. YUG CARS (A UNIT OF RUKMARANI CARS INDORE PVT LTD) (--01), RUNIJA ROAD ,BARNAGAR CITY, DISTRICT UJJAIN - 456771

BARWANI

1452. NIMAR MOTORS PVT LTD (--02), ANJAD ROAD, VILLAGE -KARAHI, BARWANI, MADHYA PRADESH - 451551

BATTIS SHIRALA

1453. CHOWGULE INDUSTRIES PRIVATE LIMITED (--01), SURVEY NO-44/2/A/1 & 14/1/A/3, NEAR SIDDHESHWAR PERTOL PUMP, VILLAGE - 32 SHIRALA, TALUKA-SHIRALA, DIST- SANGLI, MAHARASHTARA - 415408

BEGAMGANJ

1454. RAJRUP MOTORS JUNCTION (A UNIT OF RMJ MOTORS PVT LTD) (--01), IN FRONT OF DUSHERRA MAIDAN, SAGAR BHOPAL ROAD, BEGAMGANJ, DIST – RAISEN , MADHYA PRADESH – 464881 - 464881
PH :7909997536.

BEOHARI

1455. SHUBH MOTORS PVT LTD (--01), REEVA ROAD, NEAR AARRA MACHINE, BEOHARI, DIST. -SHAHDOL, MADHYA PRADESH. - 484774
PH :9755595423.

BERASIA

1456. RAJRUP MOTORS JUNCTION (A UNIT OF RMJ MOTORS PVT LTD) (--01), BHOPAL ROAD, OPP. BERASIA HOSPITAL, BERASIA, DISTRICT – BHOPAL, MADHYA PRADESH. - 463106
PH :8770593501.

BETMA

1457. OCEAN MOTORS PVT LTD (--01), OPPOSITE MPEB OFFICE, INDORE-AHEMDABAD ROAD, BETMA, DISTRICT – INDORE, MADHYA PRADESH . - 453001
PH :7389936444.

BETUL

1458. KAMTHI MOTORS LLP (--01), NEAR SUNITA COLONY, ITARSI ROAD, BETUL, MADHYA PRADESH - 4600013 - 4600013
PH :9111535777.

BHANPURA

1459. PATEL MOTORS (INDORE) PVT LTD (--01), GAROTH RD., BHANPURA, MADHYA PRADESH - 458775 - 458775

BHAVRA

1460. RUKMANI MOTORS PVT LTD (--01), GRAM PANCHAYAT, KALIYAVAHO, OPP SUNKER MANDIR, BHAVRA TEHSIL, ALIRAJPUR DISTRICT, MADHYA PRADESH - 457882. - 457882
PH :9755549200.

BHITARWAR

1461. NIKUNJ MOTORS (A UNIT OF RSKS AUTOMOTIVES PVT LTD) (--01), BESIDE SAUSAR COTTON INDUSTRIES, CIVIL LINE, NAGPUR-CHHINDWARA ROAD, DABRA-BHITARWAR ROAD, BHITARWAR, MP - 474009 - 474009
PH :9109105599.

BHOPAL

1462. JEEWAN MOTORS PVT LTD (--01), 9E SECTOR A,INDUSTRIAL AREA, GOVINDPURA, BHOPAL - 462024
1463. SATYAM MOTORS PVT LTD (--01), NH-12,SUVEESHA NAGAR,HOSHANGABAD ROAD,MISROAD - 462040
1464. JEEWAN MOTORS PVT LTD (--04), KHASRA NO. 54-55/1/1, NEAR RELIANCE FRESH,CHUNA BHATTI MAIN ROAD, INDIAN OIL PETROL PUMP, BHOPAL (M.P.) - 462036
1465. RAJRUP MOTORS JUNCTION (A UNIT OF RMJ MOTORS PVT LTD) (--01), 8A, SECTOR-C, J.K. ROAD, GOVINDPURA INDUSTRIAL AREA, BHOPAL, MADHYA PRADESH - 462023
1466. DAGA MOTORS (A UNIT OF DAGA HEIGHTS) (--01), 4/1, DAGA HEIGHTS, NEAR BUDHNA MANDIR, MAIN ROAD KOLAR ROAD, CHUNABHATTI, BHOPAL, MADHYA PRADESH. - 462016
1467. DAGA MOTORS (A UNIT OF DAGA HEIGHTS) (--02), KHASRA NO. 80/1/K, VILLAGE - HALALPURA, TEHSIL - HUZUR, DISTRICT - BHOPAL, MADHYA PRADESH. - 462030
1468. SRISATYASAI AUTOMOBILES PVT LTD (--01), RAJENDRA PRASAD BHAWAN PARISHAR, INFRONT OF OLD VIDHAN SABHA BUILDING, PO – JAHANGIRABAD, MALVIYA NAGAR, BHOPAL, DISTRICT – BHOPAL, MADHYA PRADESH – 462008. - 462008

BIAORA

1469. UNITARA MOTORS PVT LTD (--01), OLD AB ROAD, KACHNARIA, BIAORA (M.P) - 465674
PH :9575650883.

BICHHIYA

1470. MAA GAYATRI AUTOMOBILES (A UNIT OF MAA GAYATRI AGENCIES PVT LTD) (--01), NEAR CIVIL COURT, BICHHIYA, DIST. MANDLA, PIN-481995, MADHYA PRADESH - 481995
PH :9303143327.

BIJURI

1471. SHUBH MOTORS PVT LTD (--01), GRAM - NEAR GENTRI GATE, NAGAR PALIKA PARISHAD BIJURI, DISTRICT - ANUPPUR, MADHYA PRADESH - 484116
PH :9755580253.

BINA

1472. ADINATH CARS PVT LTD (--01), PLOT NO. 2/3/4/5 AMANTIGEL LAND SEMI URBAN INDUSTRIAL AREA, BINA, KHURAI ROAD (NH 26) BINA, DISTRICT – SAGAR, MADHYA PRADESH - 470113
PH :9009780047.

BURHANPUR

1473. NIMAR MOTORS PVT LTD (--02), 654/15,16 BASEMENT OF HOTEL AMBIKA RESIDENCY,, OPPOSITE PAKIZA SHOWROOM, - 450331

CHAKGHAT

1474. CITY CARS (A UNIT OF AGARWAL WHEELS PVT LTD) (--01), GRAM AND POST - CHANDAI, CHAKGHAT, TEHSIL - TEONTHER, PRAGRAJ ROAD, NH 27, DIST- REWA, MP – 486226.. - 486226

CHANDERI

1475. PREM MOTORS PVT. LTD. (--01), NEW BUS STAND,NEAR SBI BANK,, CHANDERI-LALITPUR BYE PASS - 473446

CHATTARPUR

1476. ADINATH CARS PVT LTD (--01), MAHOBA ROAD, NEAR BUS STAND, CHHATARPUR, DISTT SAGAR - 471001
PH :9009785577.

CHHANERA

1477. NIMAR MOTORS PVT LTD (--01), NEAR ST. STEPHEN SCHOOL, HARDA ROAD, CHHANERA (HARSUD), PIN-450001, MADHYA PRADESH - 450001
PH :9669569504.

CHHINDWARA

1478. KAMTHI MOTORS LLP (--01), KHASRA NO.1/53, BESIDE MVM SCHOOL, NAGPUR ROAD, VILL. -SARRA, DISTT. CHHINDWARA, MADHYA PRADESH - 480001

CHITRAKOOT

1479. CITY CARS (A UNIT OF AGARWAL WHEELS PVT LTD) (--01), PILIKOTHI CHOURAHA, BESIDE SINGH AUTOMOBILE- A HERO AGENCY, CHITRA ROAD, CHITRAKOOT, DISTRICT-SATNA (MADHYA PRADESH)- 485334 - 485334

DABRA

1480. PREM MOTORS PVT LTD (--01), PICHHORE TIRAHA, GWALIOR JHANSI ROAD, DABRA, DIST. -GWALIOR. - 475110
PH :9926809110.

DAHI

1481. KTL AUTOMOBILE PRIVATE LIMITED (--01), BHAGAT SINGH MARG, WARD NO.2, DAHI DAHI, DHAR DISTRICT - 454331

DAMOH

1482. ADINATH CARS PVT LTD (--01), SAGAR JABALPUR BYPASS ROAD, DAMOH (M.P.). - 470661
PH :9009780035.

DATIA

1483. PREM MOTORS PVT LTD (3003--05), NR.BHOJPURIA MOTORS, BHANDER ROAD, DATIA, MADHYA PRADESH - 475661
PH :9165012280.

DEORI

1484. ADINATH CARS PVT LTD (--01), C/O VISHWANATH DIXIT, VIJAYSHRI GAS SERVICE, NEAR GOVT. HIGH SCHOOL, NARSINGHPUR ROAD,VILLAGE KHEER, DEORI DISTT. SAGAR (M.P.) - 470226
PH :7000410522.

DEPALPUR

1485. OCEAN MOTORS PVT LTD (--03), NEAR LEELA RESIDENCY,INDORE ROAD,DEPALPUR,DIST.INDORE-MP - 453115

DEWAS

1486. UNITARA MOTORS PVT LTD (--01), SURVEY NO 255, A.B. ROAD, RASULPUR SQUARE, DEWAS, MADHYA PRADESH PIN 455001 - 455001
PH :9575650883.

DHAMNOD

1487. KATHED MOTOCORP (A UNIT OF KATHED MOTORS PVT LTD) (--01), KHASRA NO. 484/1/2, OLD A B ROAD, OPPOSITE HP PETROL PUMP, DHAMNOD, DIST.-DHAR, MADHYA PRADESH. - 454552
PH :9981585165.

DHAR

1488. RUKMANI MOTORS PVT LTD (5304--02), 41/2 MAGAJPURA,DHAR,, - 454001

DHARAMPURI

1489. RUKMANI MOTORS PVT LTD (--01), MANAWAR ROAD, DHARAMPURI , MADHYA PRADESH - 454449 - 454449

DINDORI

1490. STANDARD MOTOCORP PVT LTD (--01), SUKKHAR WARD 1, NEAR DHURVE PETROL PUMP,DINDORI - 481661

FALI

1491. OCEAN MOTORS PVT LTD (--01), NH 47, NEAR GRAM - FALI, TEHSIL KHUDEL, INDORE, MADHYA PRADESH. - 452016
PH :7389936477.

GADARWARA

1492. STANDARD MOTOCORP PVT LTD (--01), KHASRA NO. 130/31/A & 131/2, HALKA NO. 18/1, NO. 119, GADARWARA, DISTRICT – NARSINGHPUR . - 487551
PH :8319784336.

GANDHWANI

1493. RANA MOTORS PVT LTD (--01), MUKATI COMPLEX, BAGH AWALDA MAAN ROAD, TEHSIL- GANDHWANI , DIST – DHAR, MADHYA PRADESH - 454446 - 454446
PH :9109975566.

GANJ BASODA

1494. DAGA MOTORS (A UNIT OF DAGA HEIGHTS) (--01), LAL BAGH, BARETH ROAD, GANJ BASODA, VIDISHA, 464221. - 464221
PH :9425148584.

GARRA

1495. KAMTHI MOTORS LLP (--01), LALBARRA ROAD, GARRA INDUSTRIAL AREA, GARRA, BALAGHAT, MADHYA PRADESH. - 481331
PH :7723020684.

GAUTAMPURA

1496. OCEAN MOTORS PVT LTD (--01), RUNJI CHOURAHA, GAUTAMPURA, TEHSIL - DEPALPUR, DISTT.-INDORE, MADHYA PRADESH . - 453220

GHATIYA

1497. YUG CARS (A UNIT OF RUKMARANI CARS INDORE PVT LTD) (--01), NEAR JAGOTI SQUARE, UJJAIN – AGAR ROAD, GHATIYA, MP - 456550 - 456550
PH :9425067979.

GOTEGAON

1498. STANDARD MOTOCORP PVT LTD (--01), JABALPUR ROAD, OPP. NEW KRISHI UPAJ MANDI, TEHSIL - GOTEGAON, DIST. -NARSINGHPUR. - 443001
PH :7771003774.

GUNA

1499. PREM MOTORS PVT LTD (--01), OPP R.T.O.,A.B. ROAD,GUNA, - 473001
PH :268015.

GWALIOR

1500. PREM MOTORS PVT LTD (3003-30-01), M. L. B. ROAD,GWALIOR,, - 474002
PH :9926809803.

1501. PREM MOTORS PVT LTD (3005--01), SHIVPURI LINK ROAD, GWALIOR - 474002
PH :9926809803.

1502. NIKUNJ MOTORS (A UNIT OF RSKS AUTOMOTIVES PVT LTD) (3006-30-01), GOLE KA MANDIR SQUARE, AIRPORT ROAD, GWALIOR, MADHYA PRADESH - 474005 - 474005
PH :9407067974.

HANSA KHEDI

1503. KATHED MOTOCORP (A UNIT OF KATHED MOTORS PVT LTD) (--01), MAIN DHARMAT ROAD, HANSA KHEDI (CHANDRAWATI GANJ), TEHSIL –SANWER, DISTRICT –INDORE, MADHYA PRADESH. - 453551
PH :9479952490.

HARDA

1504. INFINITY CARS (A UNIT OF FOUZDAR CARS PVT.LTD.) (--02), NEAR RTO,INDORE HIGHWAY ROAD,HARDA MP - 461331

HATOD

1505. OCEAN MOTORS PVT LTD (--01), 726/6, INDORE-DEPALPUR MAIN ROAD, OPP. HP GAS AGENCY, HATOD DISTT. INDORE - 453111
PH :7389936477.

HATPIPLIYA

1506. UNITARA MOTORS PVT LTD (--01), OPPOSITE UNWIND RESORT, HATPIPLIYA, DEWAS, MADHYA PRADESH - 455223 - 455223

HATTA

1507. ADINATH CARS PVT LTD (--01), NEAR NAVODAYA SCHOOL, DAMOH ROAD, HATTA, DISTT. DAMOH (M.P.) - 470775. - 470775
PH :9009787562.

HOSHANGABAD

1508. INFINITY CARS (A UNIT OF FOUZDAR CARS PVT.LTD.) (--01), 185, RAMJIBABA GROUND, HOSHANGABAD, MADHYA PRADESH - 461001
PH :8889282222.

ICHHAWAR

1509. RAJRUP MOTORS JUNCTION (A UNIT OF RMJ MOTORS PVT LTD) (--01), SEHORE NADAN ROAD, NEAR SARASWATI SCHOOL, ICHHAWAR, DISTRICT – SEHORE, MADHYA PRADESH. - 466115

INDERGARH

1510. PREM MOTORS PVT LTD (--01), NEAR KHERAPATI GARDEN, INDERGARH, MP - 475675 . - 475675
PH :9926809818.

INDORE

1511. PATEL MOTORS (INDORE) PVT LTD (5303-53-01), 428/3/3,NIRANJANPUR,A B ROAD,INDORE - 452010

1512. RUKMANI MOTORS PVT LTD (5304-53-01), 2-3,,A.B. ROAD,INDORE - 452001

1513. PATEL MOTORS (INDORE) PVT LTD (5303-53-02), 176/1,PIPLYA RAU,A.B. ROAD ,INDORE - 452017

1514. RUKMANI MOTORS PVT LTD (5304-53-03), NO. -4/5, MANORAMA GANJ, INDORE - 452001

1515. OCEAN MOTORS PVT LTD (5306-53-01), PLOT NO.49, SCHEME NO.97, PART 4, COMMERCIAL MANDI, CAIT SQUARE, RING ROAD, INDORE, MP. - 452001

1516. OCEAN MOTORS PVT LTD (5306--02), NEAR QUEENS COLLEGE,ASHARAM BAPU ASHRAM, KHANDWA ROAD,INDORE - 452017

1517. PATEL MOTORS (INDORE) PVT LTD (5303--03), M.O.G. LINES, NEAR GANGWAL BUS STAND, DHAR ROAD, INDORE (M.P.) - 452006
PH :7314293919.

1518. OCEAN MOTORS PVT LTD (5306-53-03), 171A, 174A, 175A, 180A, 181A, 82A, 182A, BRAJESHWARI EXTENSION, PIPLIYAHANA, INDORE - 452001

1519. KATHED MOTOCORP (A UNIT OF KATHED MOTORS PVT LTD) (5307--01), PLOT NO. 483/2/2, MAIN DHAR ROAD, NEAR CHANDAN NAGAR POLICE STATION, INDORE, MADHYA PRADESH. - 452002
PH :7471111132.

1520. RANA MOTORS PVT LTD (--01), KHASRA NO. 293/2, 299/1, TEJPUR, GADBADI PUL, A.B. ROAD, INDORE. - 452009
PH :9109975566.

1521. PATEL MOTORS (INDORE) PVT LTD (5303-53-05), SURVEY NO. 174/5 AND 174/6, PIPLIYA RAO, INDORE, MADHYA PRADESH. - 452012

1522. RUKMANI MOTORS PVT LTD (--04), MANGAL COMPOUND, GODOWN NO. 11-12, VILLAGE 15/1, PIPLYA KUMAR, MR 11 RING ROAD, DEWAS NAKA, INDORE, MADHYA PRADESH. - 452010

1523. OCEAN MOTORS PVT LTD (5306-53-04), PLOT NO. 142 AND 151, SCHEME NO. 97, PART-4, COMMERCIAL MANDI, NEAR CAT SQUARE, INDORE. - 452012
PH :7389936405.

1524. KTL AUTOMOBILE PRIVATE LIMITED (5309-53-C1), PLOT NO.5/RC, SCHEME NO 134,MR 10,VILLAGE KHAJRANA, DIST INDORE-452010,MADHYA PRADESH - 452010
PH :6263455899.

1525. RUKMANI MOTORS PVT LTD (-53-05), 109, BHAWRASLA NEAR PRATAP AUTO, FRONT OF VINAYAK TOL KANTE, SANWER ROAD, INDORE, PIN-453111, MADHYA PRADESH - 453111
PH :9109978301.

INGORIYA

1526. YUG CARS (A UNIT OF RUKMARANI CARS INDORE PVT. LTD) (--01), SURVEY NO.589,, NAGDA ROAD,VILL.INGORIYA, - 456222

JABALPUR

1527. SHUBH MOTORS PVT LTD (5403-54-01), MAHANADDA, MADAN MAHAL ROAD, JABALPUR, MADHYAPRADESH - 482001
PH :9755545540.

1528. STANDARD MOTOCORP PVT LTD (5405-54-02), DEENDAYAL CHECK, DAMOH NAKA, JABALPUR - 482002

1529. SHUBH MOTORS PVT LTD (5403-54-03), 156/5/1, 156/3KA, 156/3KHA, 156/3GHA, BEHIND OM PETROLEUM, ADHARTAL TIRAHA, JABALPUR, MADHYA PRADESH - 482002
PH :9755595496.

1530. STANDARD MOTOCORP PVT LTD (5405--03), CHIMNEY PLOT, MADAN MAHAL, NEAR GULZAR HOTEL, JABALPUR - 482001

1531. MAA GAYATRI AUTOMOBILES (A UNIT OF MAA GAYATRI AGENCIES PVT LTD) (5404-54-01), MOUZA KARMETA N.B. 497, P.H. NO 23/26, KHASRA NO. 497 & DIV. KHASRA NO. 484/6, DIV. SHEET NO 2, PLOT NO 63/1, JABALPUR-PATAN ROAD, JABALPUR. - 482002
PH :7489901021.

1532. STANDARD MOTOCORP PVT LTD (5405-54-04), NEW WARD NO. 71, IN FRONT OF ORIENTAL COLLEGE, KATNI BYPASS, JABALPUR, MP. - 482003

JAIPUR

1533. KIRAN MOTORS LIMITED (1118-11-01), 75, JHOTWARA INDUSTRIAL AREA JAIPUR - 302001

JAORA

1534. PATEL MOTORS (INDORE) PVT LTD (--04), SURVEY NO.57/11/1, RATLAM ROAD, RATLAM NAKA, OPP. KOTHARI AGRIKO, INDUSTRIAL AREA, INFRONT OF ST. PAUL SCHOOL, JAORA, DISTT. RATLAM, MADHYA PRADESH - 457226

JAWAD

1535. PATEL MOTORS (INDORE) PVT LTD (--01), SURVEY NO.165/1/1/2,,GRAM BALKHEDA,TEHSIDIST.NEEMUCH,JAWAD,MAD HYA PRADESH 458330 - 458330

JHABUA

1536. PATEL MOTORS (INDORE) PVT LTD (--01), INDORE AHMEDABAD ROAD, MEGHNAGAR NAKA, JHABUA ,MADHYA PRADESH. - 457661
PH :9826634449.

JIRAPUR

1537. UNITARA MOTORS PVT LTD (--01), KHILCHIPUR ROAD, JIRAPUR
DIST- RAJGARH
MADHYA PRADESH - 465961 - 465961

JOBAT

1538. RUKMANI MOTORS PVT LTD (--01), BYEPASS ROAD, OPPOSITE JP COLLEGE, JOBAT, MP – 457990. - 457990
PH :6262505181.

KACHROD

1539. YUG CARS (A UNIT OF RUKMARANI CARS INDORE PVT LTD) (--01), MOHALLA PATEL COLONY, BARNAGAR RD, KACHROD, MP. - 456313

KANNOD

1540. UNITARA MOTORS PVT LTD (--01), KANNOD,DISTRICT-DEWAS, MADHYA PRADESH -455332 - 455332

KARELI

1541. MAA GAYATRI AUTOMOBILES (A UNIT OF MAA GAYATRI AGENCIES PVT. LTD) (--01), NEAR KRISHNA HOTEL,, NARSINGHPUR-KARELI BYPASS,KARELI, - 487221

KARERA

1542. PREM MOTORS PVT LTD (--01), GRAM - JHASI ROAD, KARERA, DISTRICT - SHIVPURI, MADHYA PRADESH - 473660. - 473660
PH :9926823596.

KATNI

1543. SHUBH MOTORS PVT LTD (--01), KHASRA NO.850, NH-7, JHINJARI, INFRONT OF POLICE STATION, JABALPUR ROAD, KATNI, MADHYA PRADESH. - 483501
PH :9755515839.

KHANDWA

1544. NIMAR MOTORS PVT LTD (--03), BEFORE VIKAS UDYOG, INDORE ROAD, KHANDWA - 450001

KHARGONE

1545. NIMAR MOTORS PVT LTD (--01), JETAPUR,SANAWAD ROAD,KHARGAONE, - 462026

1546. NIMAR MOTORS PVT LTD (--06), PH. NO. 35, VILLAGE – DANAPUR, TEHSIL – KHARGONE, DISTRICT – KHARGONE, MADHYA PRADESH. - 451001

KHATEGAON

1547. UNITARA MOTORS PVT LTD (--01), NEMAWAR-INDORE ROAD, KHATEGAON, M.P - 455336 - 455336
PH :9993406993.

KOTMA

1548. SHUBH MOTORS PVT LTD (--01), WARD NO.7, ANNUPPUR KOTMA ROAD, DISTT. ANNUPUR, KOTMA (M.P.) - 484336
PH :9755581441.

KUKSHI

1549. OCEAN MOTORS PVT LTD (--01), SURVEY NO.593/5/1, 593/6/1, BARWANI ROAD, TOLL KANTE KE PASS, TEHSIL-KUKSHI - 454331

KURWAI

1550. SRISATYASAI AUTOMOBILES PVT LTD (--01), SH-14, MAIN ROAD,,KURWAI,VIDISHA,,MADHYA PRADESH 464224 - 464224

LAKHNADON

1551. KAMTHI MOTORS LLP (--01), RANI DURGAVATI CHOWK, NH-7, WARD NO. - 05, JABALPUR ROAD, LAKHNADON, MADHYA PRADESH. - 480886
PH :9285506128.

LATERI (VIDISHA)

1552. SRISATYASAI AUTOMOBILES PVT LTD (--01), KHASRA NO.572,,ANANDPUR ROAD,, LATERI,MADHYA PRADESH 464114 - 464114

LOHARI

1553. KATHED MOTOCORP (A UNIT OF KATHED MOTORS PVT LTD) (--01), SINGHANA-KUKSI ROAD, LOHARI, DHAR, PIN-454335, MADHYA RPADESH - 454335

MAHESHWAR

1554. NIMAR MOTORS PVT LTD (--01), OPPOSITE DEVRAJ HOTEL, MAIN MANDLESHWAR-DHAMNOD ROAD, MAHESHWAR, MP - 451224
PH :9669569504.

MAHIDPUR

1555. YUG CARS (A UNIT OF RUKMARANI CARS INDORE PVT LTD) (--01), 264/3, BHIMAKHEDA, MAHIDPUR, UJJAIN - 456443
PH :9109130402.

MAIHAR

1556. CITY CARS (A UNIT OF AGARWAL WHEELS PVT LTD) (--04), UNIT OF AGARWAL WHEELS PVT. LTD., NEAR RELIANCE PETROL PUMP, NH-7, REWA ROAD, MAIHAR (M.P.) - 485771
PH :7354252525.

MAJHAULI

1557. CITY CARS (A UNIT OF AGARWAL WHEELS PVT LTD) (--01), WARD NUMBER 14, NAGAR PARISAD MAJHAULI, DIST. SIDHI (M.P) - 486666. - 486666
PH :7970003171.

MAJHOLI

1558. SHUBH MOTORS PVT LTD (--01), INDRANA ROAD, SUHAJNI TIRAHA, MAJHOLI, MADHYA PRADESH - 483336
PH :911155580.

MANASA

1559. PATEL MOTORS (INDORE) PVT LTD (--01), 982/1, RAMPURA ROAD, MANASA, DIST. NEEMUCH, MADHYA PRADESH. - 458110
PH :9644405368.

MANAWAR

1560. OCEAN MOTORS PVT LTD (--01), PLOT NO – 40, BAKANER ROAD, MANAWAR, DISTRICT – MANAWAR, MADHYA PRADESH. - 454335
PH :7389936477.

MANDLA

1561. STANDARD MOTOCORP PVT LTD (--01), KATARA ROAD, MANDLA, DIST. MANDLA MP - 481661

MANDSAUR

1562. PATEL MOTORS (INDORE) PVT LTD (--02), BLOCK 'C', SHED-5, WARD NO. 1, INDUSTRIAL AREA, CITY - MANDSAUR, MADHYA PRADESH. - 458001

MANPUR

1563. PATEL MOTORS (INDORE) PVT LTD (--01), KHASRA NO. 302/1/3, AB ROAD, MANPUR, DIST-INDORE - 453661
PH :9826360699.

MAUGANJ

1564. CITY CARS (A UNIT OF AGARWAL WHEELS PVT LTD) (--01), NEAR SENGAR PETROL PUMP ,CHACK MODE WARD NUMBER 03,NH 7 ,MAUGANJ, DISTT – REWA, MADHYA PRADESH – 486331. - 486331
PH :975301199.

MHOW

1565. OCEAN MOTORS PVT LTD (--01), A.B. ROAD, NEAR KISANGANJ POLICE STATION, MHOW - 453441

MOHANA

1566. PREM MOTORS PVT LTD (--01), MOHANA, DISTRICT GWALIOR, MADHYA PRADESH - 475330. - 475330

MORENA

1567. PREM MOTORS PVT LTD (--01), NEAR SALES TAX BARRIER SQUARE, AB ROAD MORENA - 476001
PH :9926002791.

NAGDA

1568. YUG CARS (A UNIT OF RUKMARANI CARS INDORE PVT LTD) (--01), PLOT NO. 17, STATE HIGHWAY NO.17, INDORIYA ROAD, NAGDA, DISTRICT – UJJAIN, MADHYA PRADESH. - 456335

1569. PATEL MOTORS (INDORE) PVT LTD (--01), SURVEY NO.200/1,205/1/208,, VILLAGE MANKI NAGDA,MHOW ROAD, - 454660

NAINPUR

1570. STANDARD MOTOCORP PVT LTD (--01), MANJU SAHU, MANDLA ROAD, NEAR MPEB OFFICE, ADJOINING TO BAJAJ SHOW ROOM, NAINPUR, DISST MANDLA, MADHYA PRADESH -481776. - 481776
PH :7771003374.

NARAYANGARH

1571. PATEL MOTORS (INDORE) PVT LTD (--01), 1742/11, NARAYANGARH, TEHSIL - MALHARGARH, DISTRICT- MANDSAUR, MADHYA PRADESH. - 458553
PH :9977703907.

NARSINGHPUR

1572. STANDARD MOTOCORP PVT LTD (--01), KH. NO. 82/44 & 83/44, NB NO.519, PC NO. 19(42), OLD 46 (NEW) MOUZA RONSRA R.I.M. 2, TEHSIL & DISTRICT – NARSINGHPUR, MADHYA PRADESH. - 487001

NASRULLAGANJ

1573. JEEWAN MOTORS PVT LTD (--01), KHASRA NO. 458, VILLAGE – RALA, TEHSIL – NASRULLAGANJ, DISTRICT – SEHORE, MADHYA PRADESH. - 466331

NEEMUCH

1574. PATEL MOTORS (INDORE) PVT LTD (--02), MHOW-NEEMUCH ROAD,NEEMUCH(MP),, - 458441
PH :9977703907.

NIWARI

1575. ADINATH CARS PVT LTD (--01), ATKHASRA NO 2017/1, NEAR HDFC BANK MAIN ROAD, NIWARI, MADHYA PRADESH –472442. - 472442
PH :9009787562.

NIWAS

1576. STANDARD MOTOCORP PVT LTD (--01), OPP. INDIAL OIL PETROL PUMP, NIWAS , DISTRICT MANDLA, MADHYA PRADESH – 483001. - 483001

PANDHURNA

1577. KAMTHI MOTORS LLP (--01), SHANKAR NAGAR, PANDHURNA, DIST. - CHHINDWARA, MADHYA PRADESH - 480334. - 480334
PH :9111535777.

PANNA

1578. CITY CARS (A UNIT OF AGARWAL WHEELS PVT LTD) (--01), KHASRA NO. 378, MOHAN RAJ VILAS CHOURAHA, BESIDE MOHAN RAJ HOTEL, CIVIL LINE NH-75, PANNA, MADHYA PRADESH . - 488001
PH :7354252525.

PARANDA

1579. CHAVAN MOTORS DIVISION INDIA PVT LTD (--01), 691/1/190, PARANDA BARSHI ROAD, PARANDA, TAL-PARANDA, DIST-DHARASHIV - 413502

PARASIA

1580. KAMTHI MOTORS LLP (--01), KHIRSADOHMAL, PARASIA, CHHINDWARA. MP - 480441
PH :9285506109.

PAT

1581. YUG CARS (A UNIT OF RUKMARANI CARS INDORE PVT LTD) (--01), WARD NO. 9, UJJAIN -KOTA ROAD, OPPOSITE GOVT MIDDLE SCHOOL, PAT, DISTT UJJAIN , MP - 416522

PATAN

1582. MAA GAYATRI AUTOMOBILES (A UNIT OF MAA GAYATRI AGENCIES PVT LTD) (--01), BESIDE KRISHI UPAJ MANDI, PATAN, PIN-483119, MADHYA PRADESH - 483119
PH :9770415141.

PAWAI

1583. CITY CARS (A UNIT OF AGARWAL WHEELS PVT LTD) (--01), NEAR ETORI PETROL PUMP, PANNA ROAD, PAWAI, DIST. – PANNA, MP- 488446 - 488446
PH :9754301199.

PETLAWAD

1584. PATEL MOTORS (INDORE) PVT LTD (--01), NEAR H. P. PETROL PUMP, THANDLA ROAD, PETLAWAD, DISTRICT – JHABUA, MADHYA PRADESH. - 457773
PH :9111160868.

PICHHORE

1585. PREM MOTORS PVT LTD (--01), NEAR OF BACHRON CHAURAHA, PICHHORE, DIST, DIST. SHIVPURI, PIN-475300, MADHYA PRADE - 475300

PIPARIYA

1586. INFINITY CARS (A UNIT OF FOUZDAR CARS PVT.LTD.) (--01), HATHWAS TIRAHA, SHOBHAPUR ROAD, PIPARIYA, MADHYA PRADESH. - 461775

PITHAMPUR

1587. PATEL MOTORS (INDORE) PVT LTD (5303--04), 254-A, SECTOR-1, INDUSTRIAL AREA, PITHAMPUR, DISTT. DHAR - 454775
PH :9826360699.

1588. KTL AUTOMOBILE PRIVATE LIMITED (--01), WARD NO 18 , VILLAGE – AKOLIA , PITHAMPUR, MP - 454775 - 454775

PUSHPRAJGARH

1589. SHUBH MOTORS PVT LTD (--01), WARD NUMBER 8 ,SHIVRICHANDAS KARAUNDI TIRAHA, AMARKANTAK ROAD RAGENDRAGRAM DISTRICT ANUPPUR (M.P.) - 484224

RAISEN

1590. JEEWAN MOTORS PVT LTD (--01), WARD NO 14, PATANDEV, SAGAR ROAD, RAISEN, MADHYA PRADESH - 464551
PH :9826017799.

1591. RAJRUP MOTORS JUNCTION (A UNIT OF RMJ MOTORS PVT LTD) (--01), OPPOSITE S P OFFICE, NEAR ST. FRANCIS SCHOOL, VIDISHA ROAD, RAISEN, MADHYA PRADESH. - 464551
PH :7869755501.

RAJGARH

1592. RUKMANI MOTORS PVT LTD (--01), CHANDRA SHEKHAR AZAD MARG, NEAR TRIMURTI NAGAR, RAJGARH, DIST. - DHAR, MP. - 454116
PH :9755549200.

RAJOD

1593. RUKMANI MOTORS PVT. LTD. (--01), NEAR POLICE STATION,,SARDARPURA BADNAWARROAD,,RAJOD,DIST.DHAR,MADHYA PRADESH 454 - 454660

RATLAM

1594. PATEL MOTORS (INDORE) PVT LTD (--01), 76 C,D&E,INDUSTRIAL AREA,RATLAM - 452001

1595. PATEL MOTORS (INDORE) PVT LTD (--03), 181/17/18,DOSHI GOAN,INDUSTRIAL AREA ,JAORA ROAD,RATLAM - 457001

REWA

1596. CITY CARS (A UNIT OF AGARWAL WHEELS PVT LTD) (--03), NYPASS CHURHATA,DIST. REWA - 482001
PH :7354252525.

1597. SHUBH MOTORS PVT LTD (5403--05), VILLAGE – RATHARA, TEHSIL – HUZUR, DISTRICT - REWA, MADHYA PRADESH - 486003 - 486003
PH :9755582351.

SABALGARH

1598. PREM MOTORS PVT LTD (--01), NR. INDIAN OIL PETROL PUMP, SABALGARH, DIST. – MORENA, MP - 476229 - 476229

SADALPUR

1599. OCEAN MOTORS PVT LTD (--01), JAIN SHRI SUPER MARKET, SERVICE ROAD, MHOW-NEEMUCH ROAD, SADALPUR, DISTRICT DHAR (M.P) - 454001. - 454001
PH :7389936423.

SAGAR

1600. ADINATH CARS PVT LTD (--01), STATION ROAD, TILAK GANJ, SAGAR (M.P). - 470001
PH :9009780030.

SANWER

1601. RANA MOTORS PVT LTD (--01), S.NO. 356/3/1, OLD UJJAIN BYPASS ROAD, TALUKA SANWER, DIST.-INDORE, MADHYA PRADESH. - 453551
PH :9109975566.

SATNA

1602. CITY CARS (A UNIT OF AGARWAL WHEELS PVT LTD) (--05), (A UNIT OF AGRAWAL WHEELS PVT. LTD.), BESIDE BHASKAR PRESS, BEHIND MARUTI SHOWROOM, WARD NO.27, AMOUDHA KALA, PANNA ROAD, SATNA - 485001

SAUSAR

1603. KAMTHI MOTORS LLP (--01), BESIDE SAUSAR COTTON INDUSTRIES, CIVIL LINE, NAGPUR-CHHINDWARA ROAD, SAUSAR, DIST-CHHINDWARA, M.P – 480106. - 480106
PH :9111535777.

SEHORE

1604. JEEWAN MOTORS PVT LTD (--02), 869/1/2,OFFICERS COLONY,IN FRONT OF CHURCH GROUND,BHOPAL, INDORE ROAD - 466001

SENDHWA

1605. NIMAR MOTORS PVT LTD (--01), KHASRA NO. 286/10 AND 287/14, HALKA NO. 11, VARLA ROAD, SENDHWA, TEHSIL – SENDHWA, DISTRICT – BARWANI, MADHYA PRADESH. - 451666

SEONI

1606. KAMTHI MOTORS LLP (--01), IN FRONT OF MVM SCHOOL, JABALPUR ROAD, RTO BYPASS, SEONI - 480882

SEONI MALWA

1607. INFINITY CARS (A UNIT OF FOUZDAR CARS PVT.LTD.) (--01), NEAR AXIS BANK, SEONI MALWA, MP - 461223 - 461223
PH :8889281113.

SHAHDOL

1608. SHUBH MOTORS PVT LTD (--01), JAMUA, NEAR GYAN GUPTA,BUDHAR ROAD,SHAHDOL, - 484771
PH :9755595423.

SHAHPURA

1609. STANDARD MOTOCORP PVT LTD (--01), KHASARA NO.172/3, BHERAV MATA MANDIR NEAR TOLL NAKA MAIN ROAD, JABALPUR NARSINGHPUR ROAD, SHAHPURA. - 483119
PH :7771000392.

1610. STANDARD MOTOCORP PVT LTD (--01), NEAR SAI PETROLEUM, SHARDA NAGAR, JABALPUR ROAD, SHAHPURA, DIST –DINDORI, MP. - 481990

SHAJAPUR

1611. UNITARA MOTORS PVT LTD (--01), LAL GHATI, A B ROAD, SHAJAPUR, MP - 465001
PH :9993406993.

SHAMGARH

1612. PATEL MOTORS (INDORE) PVT LTD (--01), KHASRA NO. 1179/1, MOHALLA MAROTH, TEHSIL – SHAMGARH, DISTRICT – MANDSAUR, MADHYA PRADESH. - 458883
PH :9753088222.

SHIVPURI

1613. PREM MOTORS PVT LTD (3003--04), A B ROAD,SIVPURI,, - 473551
PH :9926809976.

SHUJALPUR

1614. UNITARA MOTORS PVT LTD (--01), KISHONI, OPPOSITE HP FUEL STATION, SHUJALPUR, M.P - 465333 - 465333
PH :9575650883.

SHYAMPUR

1615. DAGA MOTORS (A UNIT OF DAGA HEIGHTS) (--01), NEAR MAHADEV RESTAURANT, NH-12, SHYAMPUR, DISTRICT – SEHORE, MADHYA PRADESH - 466651. - 466651
PH :7909997570.

SIDHI

1616. CITY CARS (A UNIT OF AGARWAL WHEELS PVT LTD) (--01), ADHIYAR KHOH, NEAR GYAN DHARAMKATA, SIDHI, MADHYA PRADESH. - 486661

SIHORA

1617. SHUBH MOTORS PVT LTD (--01), KHASRA NO. 31/1, P.H. – 11, MOUZA – GHAT SIMARIYA, TEHSIL – SIHORA, DISTRICT – JABALPUR, MADHYA PRADESH,. - 483440

SILWANI

1618. RAJRUP MOTORS JUNCTION (A UNIT OF RMJ MOTORS PVT LTD) (--01), MAHAVIR COLONY, SAI KHEDA ROAD, SILVANI, DIST. RAISEN, MP - 464886. - 464886
PH :9174000501.

SIMROL

1619. RUKMANI MOTORS PVT LTD (--01), AMRIT SAGAR COLONY, SIMROL, DIST. - INDORE, MADHYA PRADESH - 452020 - 452020
PH :9109978301.

SINGHOLI

1620. PATEL MOTORS (INDORE) PVT LTD (--01), BEGHU CHITTORGARH ROAD, SINGOLI, NEEMUCH, MP – 458228 - 458228
PH :9977703907.

SINGRAULI

1621. CITY CARS (A UNIT OF AGARWAL WHEELS PVT LTD) (--02), NEAR VIJAY BANDHU PETROL PUMP, KACHANI, THE. WAIDHEN, DISTRICT, SINGRAULI ,MADHYA PRADESH KHASRA NO-3721/1 &3721/2, GRAM- NAVGARH, SIDHI-REWA ROAD, WAIDHAN , DISTRCT-SINGROULI (MADHYA PRADESH)-486887. - 486886
PH :7354252525.

SIRONJ

1622. RAJRUP MOTORS JUNCTION (A UNIT OF RMJ MOTORS PVT LTD) (--01), OPPOSITE BALAJI DHAM, LINK ROAD, SIRONJ, MADHYA PRADESH. - 464228
PH :7909997585.

SITAMAU

1623. PATEL MOTORS (INDORE) PVT LTD (--01), MAUKHEDA, TEHSIL - SITAMAU, DISTRIST - MANDAUR, MADHYA PRADESH - 458990 - 458990
PH :9826360699.

SUTHALIA

1624. UNITARA MOTORS PVT LTD (--01), MAKSUDANGARH ROAD, NEAR POLICE STATION SUTHALIYA - 465677

TARANA

1625. YUG CARS (A UNIT OF RUKMARANI CARS INDORE PVT LTD) (--01), HOUSE NO. 1/6, WARD NO. 10, TOTLA MARG, TARANA-UJJAIN ROAD, TARANA, MADHYA PRADESH . - 456665

TENDUKHEDA

1626. STANDARD MOTOCORP PVT LTD (--01), KHASARA NO. 49/6, MOUZA – TENDUKHEDA, DISTRICT – NARSINGHPUR . - 470880

THIKRI

1627. NIMAR MOTORS PVT LTD (--01), OPPOSITE OF SHREE BALAJI TYRE SALES & SERVICE, SHREE NAGAR, THIKRI, MADHYA PRADESH –451660. - 451660
PH :9109202186.

TIKAMGARH

1628. ADINATH CARS PVT LTD (--01), NEAR NEW BUS STATI ON, OPPOSITE OF BANKE BIHARI COLONY, MAURANIPUR ROAD,TIKAMGARH, MADHYA PRADESH - 472001
PH :9200888454.

TULJAPUR

1629. CHAVAN MOTORS DIVISION INDIA PVT LTD (--01), 684/2, PLOT NO 16, VISHWAS NAGAR, BEED ROAD, TULJAPUR DIST. DHARASHIV - 413601

UDAIPURA

1630. JEEWAN MOTORS PVT LTD (--01), WARD NO 3, NH-12, UDAIPURA, DIST. - RAISEN, MADHYA PRADESH - 464770
PH :9826017799.

UJJAIN

1631. YUG CARS (A UNIT OF RUKMARANI CARS INDORE PVT LTD) (--01), SURVEY NO. 59/3, DEWAS ROAD,UJJAIN - 456010
1632. YUG CARS (A UNIT OF RUKMARANI CARS INDORE PVT LTD) (--02), 54/3/2, AGAR NAKA, NEAR VARDHAN HOTEL, MAKODI AAM CHAURAHA, INDIRA NAGAR, UJJAIN, MADHYA PRADESH. - 456001
PH :9425067979.

UMARIA

1633. SHUBH MOTORS PVT LTD (5403--04), 8/2 GRAM BHAGRA, KIRANTAL KHURD, UMARIA DISTRICT UMARIA (MADHYA PRADESH) - 484661
PH :9755502682.

UNHEL

1634. YUG CARS (A UNIT OF RUKMARANI CARS INDORE PVT LTD) (--01), 15/ 35, STATION ROAD, UNHEL, UJJAIN - 456221

VIDHISHA

1635. DAGA MOTORS (A UNIT OF DAGA HEIGHTS) (--01), PLOT NO 59/1, VILLAGE RANGAI, VIDISHA, MADHYA PRADESH - 464001
PH :9109900374.

VIDISHA

1636. RAJRUP MOTORS JUNCTION (A UNIT OF RMJ MOTORS PVT LTD) (--01), UDAYNAGAR COLONY, NEAR OIL FACTORY, SAGAR ROAD, VIDISHA, DISTRICT-VIDISHA (M.P.) - 464001 - 464001
PH :7869755501.

VIJAY RAGHAVGARH

1637. MAA GAYATRI AUTOMOBILES (A UNIT OF MAA GAYATRI AGENCIES PVT LTD) (--01), KARITALAI- VIJAYRAGHAVGARH ROAD, VIJAYRAGHAVGARH, DISTT. - KATNI, MP-483775 - 483775

MAHARASHTRA

AHMEDNAGAR

1638. KANKARIYA AUTOMOBILES PRIVATE LTD (--01), SARDA MILLS,SAVEDI ROAD,AHMEDNAGAR, MAHARASTRA - 414001
PH :7410024227.
1639. KANKARIYA AUTOMOBILES PRIVATE LTD (--05), MIDC, AHMEDNAGAR - 414003
PH :7447700029.
1640. MAHALAXMI AUTOMOTIVES PVT LTD (--01), SURVEY NO 248/249, MANMAD RD, SAVEDI, AHMEDNAGAR. - 414003

AHMEDPUR

1641. AUTOMOTIVE MANUFACTURERS PVT LTD (--01), SURVEY NO-56/1/2, VILLAGE-MARSHIVANI, NH-361, PO & TALUKA -AHMEDPUR, DIST-LATUR, PIN-413515. - 413515

AJARA

1642. SAI SERVICE PRIVATE LIMITED (--01), GAT NO. 30, PLOT NO. 24, GP MILKAT NO. 906/3, NEAR MAYUR PETROL PUMP, AJARA, DISTRICT – KOLHAPUR. - 416505

AKLUJ

1643. CHAVAN MOTORS DIVISION INDIA PVT LTD (--04), PLOT NO. 15/3-A, PANCHVATI STOP,MALINAGAR ROAD,AKLUJ - 413101

AKOLA

1644. KHANDELWAL AUTOWHEELS PVT LTD (--01), TIRUPATI CHAMBERS,CONVENT ROAD,AKOLA - 444005
1645. KHANDELWAL AUTOWHEELS PVT LTD (--02), PLOT NO E/12-13-MIDC PHASE-2, AKOLA. - 444001

AKOT

1646. KHANDELWAL AUTOWHEELS PVT LTD (--01), PLOT NO 18 & 19, SURVEY NO 600/3, AKOT – AKOLA ROAD, AKOT, AKOLA (MAHARASHTRA) - 444101 - 444101

ALEPHATA

1647. KOTHARI AUTO WHEELS PVT LTD (--01), GAT NO.446, MATOSHRI PRIDE, NEAR SADHANA BANK, KALYAN ROAD, A/P – ALEPHATA, TALUKA – JUNNAR, DISTT. PUNE, PIN-412411 - 412411
PH :8421753278.

ALIBAUG

1648. SIMRAN MOTORS PVT LTD (--05), SURVEY NO. 30/1, OPP. RCF COLONY, VILLAGE – VESHVI, ALIBAUG, DISTRICT – RAIGAD, MAHARASHTRA - 402201

ALLAPALLY

1649. TRISTAR CARS PVT LTD (---), SHIVAJI SQUARE ETAPALLI ROAD, WARD NO 2, MOUZA-ALLAPALLI, HOUSE NO 1465, TAH-AHERI, DIST-GADCHIROLI-442703. - 442703

AMALNER

1650. MANRAJ MOTORS PVT LTD (--01), PRASAD MOTORS, RAVI NAGAR, NEAR NAYARA PETROL PUMP, DHULE ROAD, AMALNER, DIST.JALGAON-425401. - 425401

AMBERNATH

1651. AHER AUTOPRIME LLP (--01), PLOT NO-24,26,27/17, MIDC, KALYAN-BADLAPUR ROAD, VILLAGE - KOHOJ, KHUNTAVLI, AMBERNATH - 421501
PH :8422871720.

AMRAVATI

1652. ASPA BANDSONS AUTO (P) LTD (--01), SATURNA BADNERA ROAD,AMRAVATI,MAHARASTRA, - 444607
PH :9423123665.
1653. ASPA BANDSONS AUTO (P) LTD (--05), A1/A2, OLD BY PASS ROAD, MIDC, AMRAVATI, DIST: AMRAVATI, MAHARASTRA. - 444607
PH :9423339601.

ARAG

1654. CHOWGULE INDUSTRIES PRIVATE LIMITED (--01), SURVEY NO.1 , VILL-ARAG, TALUKA: MIRAJ, DIST: SANGLI - 416401

ARVI

1655. SEVA AUTOMOTIVE PVT LTD (--01), PLOT NO-7, SURVEY NO-32/7, MAUZA -AHMADNAGAR, WARDHA ROAD, NAGAR PARISHAD-ARVI, TEHSIL-ARVI, DIST-WARDHA - 442201
PH :8484988769.

ASHTA

1656. SIDDHI WHEELS (A UNIT OF TARALEKAR MOTORS PVT LTD) (--01), GATE NO: 328/9, NEAR S R HOTEL, ASHTA -ISLAMPUR ROAD, ASHTA - 416301

ATPADI

1657. SIDDHI WHEELS (A UNIT OF TARALEKAR MOTORS PVT LTD) (--01), GAT NO. 2774, MAYAKKA NAGAR . NEAR BDS BANK . ATPADI. TAL- ATPADI . DISTRICT SANGLI . PIN 415301 - 415301

AURANGABAD

1658. AUTOMOTIVE MANUFACTURERS PVT LTD (2102-21-01), PLOT NO. 1,P.B.NO. 716,CHIKALTHANA,AURANGABAD - 431210
PH :9158000046.
1659. PAGARIYA AUTO PVT LTD (2103-21-01), OPP. OLD HIGH COURT, NEAR HOTEL ASHOKA EXECUTIVE, JALANA ROAD, AURANGABAD - 431005
1660. AUTOMOTIVE MANUFACTURERS PVT LTD (2102-21-03), C-27,MIDC, CHIKALTHANA , N/R LUPIN LABORATORIES, AURANGABAD, MAHARASHTRA - 431006
PH :9158000059.
1661. PAGARIYA AUTO PVT LTD (2103-21-05), GAT NO. 46, PLOT NO. 50, NEAR MASTER COOK RESTAURANT (KAILASH HOTEL) BEED BYPASS ROAD, AURANGABAD, MAHARASHTRA - 431005
1662. PAGARIYA AUTO PVT LTD (2103-21-06), PLOT NO.A-35 MIDC, NEAR MAIN RAILWAY STATION, AURANGABAD - 431001

BALLARPUR

1663. TRISTAR CARS PVT LTD (--04), PLOT NO.11, BEHIND ZAWERI PETROL PUMP, NEAR GURU NANAK COLLEGE, ALLAPALLI ROAD, BAMNI, TAH. BALLARPUR - DIST. - 442701
PH :7447473304.

BARAMATI

1664. MAHALAXMI AUTOMOTIVES PVT LTD (--01), BARAMATI- PHALTAN RD., KASBA, BARAMATI, DIST. PUNE - 413102
PH :9881370310.

BARSHI

1665. CHAVAN MOTORS DIVISION INDIA PVT LTD (--01), GAT NO.1407/1, LATUR ROAD, NEAR ESSAR PETROL PUMP, BARSHI. - 413401

BEED

1666. PAGARIYA AUTO PVT LTD (--01), GUT NO. 61, VILLAGE – GHOSAPURI, TALUKA AND DISTRICT – BEED, MAHARASHTRA . - 431122

BHANDARA

1667. AUTOMOTIVE MANUFACTURERS PVT LTD (2001--03), JINDAL'S BLDG, NEAR NAVKAR PETROL PUMP, SAINATH NAGAR, NH-6, BHANDARA - 441904

BHIGWAN

1668. MAHALAXMI AUTOMOTIVES PVT LTD (--01), GAT NUMBER-342, NEXT TO HOTEL SAGAR, PUNE-SOLAPUR HIGHWAY, BHIGWAN – 413130. - 413130
PH :9922979653.

BHILAWADI

1669. SIDDHI WHEELS (A UNIT OF TARALEKAR MOTORS PVT LTD) (--01), SURVEY NO-1721, AT POST - MALWADI, BHILAWADI, TAL-PALUS, DIST-SANGLI, PIN-416303.

BHIWANDI

1670. NAVNIT MOTORS PVT LTD (3908--03), SURVEY NO. 42/2, 45/1, GUPTA WAREHOUSE, DAPODE, TALUKA-BHIWANDI, DIST-THANE. - 421302
1671. AHER AUTOPRIME LLP (--03), NEXT TO K N PARK, RAJNOLI VILLAGE, KALYAN BYPASS ROAD, BHIWANDI - 421302

BHOR

1672. SEHGAL AUTORIDERS PVT LTD (--01), GUT NO. 929/1, UTTROLI, BHOR, TALUKA – BHOR, DISTRICT – PUNE, MAHARASHTRA. - 412206
PH :9527771016.

BHUSAWAL

1673. MANRAJ MOTORS PVT LTD (--02), NATIONAL HIGHWAY 6, NEAR KHADKA ROAD CROSSING, BHUSAWAL 425201. - 425201
PH :9422867242.

BOISAR

1674. SHIVAM AUTOZONE INDIA PVT LTD (--01), PLOT NO. J-240, MIDC ROAD, BOISAR, TARAPUR INDUSTRIAL, MUMBAI, PIN-401501, MAHARAHSTRA - 401501
PH :8082551155.

BRAMHAPURI

1675. TRISTAR CARS PVT LTD (--02), 165, NAVEGAON, NEAR VIDYANIKETAN SCHOLL, WADSA ROAD, BRAHMPURI, DIST: CHANDARPUR, MAHARASHTRA - 441206
PH :7745883000.

BULDHANA

1676. MANRAJ MOTORS PVT LTD (--01), GAT NO. 94, PLOT NO. 11, SUNDERKHED, BULDHANA, MAHARASHTRA. - 443001
PH :7875051521.

CHALISGAON

1677. MANRAJ MOTORS PVT LTD (--01), SL. NO 406, PLOT NO. 2, NEAR HOTEL RANI PARK, DHULE ROAD, CHALISGAON, DIST: JALGAON, MAHARASHTRA. - 424101
PH :8408889861.

CHANDGAD

1678. SAI SERVICE PRIVATE LIMITED (--01), GAT NO.360, G.P.M NO.157, A/P HALKARNI TALUKA CHANDGAD, DISTT. KOLHAPUR, MAHARASHTRA. - 416507
PH :9673339103.

CHANDRAPUR

1679. TRISTAR CARS PVT LTD (--01), NR. HOTEL KUNDAN PLAZA,NAGPUR ROAD,CHANDRAPUR - 442401
PH :7722068612.

1680. TRISTAR CARS PVT LTD (--03), NAGPUR ROAD, CHANDRAPUR - 442401
PH :7722068603.

1681. ARYA CARS (A UNIT OF BARBATE AUTOMOTIVE PVT. (--01), ARYA CARS (A UNIT OF BARBATE AUTOMOTIVE, WORKSHOP /BODY SHOP :PLOT NO X-7 - 442401

CHIMUR

1682. TRISTAR CARS PVT LTD (--01), SHOP NO 1-2, OPP. RTM COLLEGE, CHIMUR, DIST-CHANDRAPUR, MAHARASHTRA - 442903 - 442903

CHIPLUN

1683. JAGRUT MOTORS PRIVATE LIMITED (--01), SURVEY NO-543, NH-17, MUMBAI-GOA HIGHWAY,AT-KALAMBASTE,TAL-CHIPLUN, DIST-RATNAGIRI,MAHARASHTRA - 415605

CHOUK

1684. SIMRAN MOTORS PVT LTD (--01), SIMRAN MOTORS PVT LTD STOCKYARD , AT WAVANDAL ,SURVEY NO- 62/2A POST- CHOWK, NEAR ARUN HOTEL ,MUMBAI-PUNE HIGHWAY, TALUKA - KHALAPUR, DISTRICT - RAIGAD - 410206
PH :8691988895.

COLVALE

1685. SAI SERVICE PVT. LTD. (--08), PLOT NO.S-11, COLVALE INDUSTRIAL ESTATE, COLVALE, BARDEZ COLVALE - 403507

DAHANU

1686. SAI SERVICE PRIVATE LIMITED (--03), DAHANU-JAWAHAR ROAD, DAHANU(E), TAL-DAHANU, DIST. TAHNE - 401602

DAHIWADI

1687. CHOWGULE INDUSTRIES PRIVATE LIMITED (--01), GAT NO-483/13/2, VILLAGE-DAHIWADI, DAHIWADI-SATARA ROAD, TALUKA-MAN, DIST-SATARA, MAHARASHTRA. - 415102

DAPOLI

1688. JAGRUT MOTORS PRIVATE LIMITED (--06), AT/POST-DAPOLI, DAPOLI-KHED ROAD,DAPOLI.DIST RATANAGIRI. - 415712

DEHUGAON

1689. SUMANKIRTI CARS PVT LTD (--01), GAT NO 359, DEHU – ALANDI ROAD, DEHUGAON, PUNE, MAHARASHTRA (412109) - 412109

DHAMANGAON

1690. ASPA BANDSONS AUTO (P) LTD (--01), RAMDEVBABA NAGAR, ANJANISINGH ROAD, DHAMANGAON RAILWAY, DIST- AMRAVATI - 444709
PH :9850333558.

DHULE

1691. SEVA AUTOMOTIVE PVT LTD (--01), GATE NO. 90,AWADHAN,MUMBAI AGRA ROAD,DHULE - 424001

DINDORI

1692. AUTOMOTIVE MANUFACTURERS PVT LTD (--01), S.NO.753, NEAR PANDAV PETROL PUMP,NASIK DINDORI ROAD, TAL. DINDORI, DISTT. NASIK - 422202
PH :9673000822.

DOMBILVLI

1693. AUTOMOTIVE MANUFACTURERS PVT LTD (3901--02), PLOT NO. B-43, PHASE-1,DOMBIVALI INDUSTRIAL AREA, DOMBIVALI,DISTT-THANE, MAHARASHTRA, - 421201

1694. FORT POINT AUTOMOTIVE CARS PVT LTD (3906--02), SURVEY NO.13, NEAR PIMPLESHWAR TEMPLE, OPP. MAHANAGAR CNG PUMP, KALYAN-SHILPHATA ROAD, MANGAON, SONARPADA, DOMBIVLI EAST. - 421203

GADCHIROLI

1695. BARBATE AUTOMOTIVE INDIA PVT LTD (--01), PLOT NO. 10, GANESH NAGAR, MUL ROAD, GADCHIROLI , MAHARASTRA - 442702
PH :8669929188.

1696. TRISTAR CARS PVT LTD (--01), PLOT NO 29, SURVEY NO 125/1OPP SBI NAVEGAON BRANCH, MUL ROAD< NAVEG - 442605

GANDHIGLAJ

1697. SAI SERVICE PRIVATE LIMITED (3802--04), 581/7B, PLON NO-12, SANKESHWAR ROAD, OPP. HOTEL NEELKAMAL, TAL. GADINGLAJ - 416502

GARGOTI

1698. KR MOTORS KOLHAPUR PVT LTD (--01), 230 & 231, KOLHAPUR GARGOTI ROAD, KHANAPUR, TALUKA BHUDARGAD, DISTRICT KOLHAPUR, MAHARASHTRA. - 416209

GEORAI

1699. PAGARIYA AUTO PVT LTD (--01), SHRI SIDDHI VINAYAK COMPOUND, SURVEY NO 556, JALNA ROAD, GEORAI, DISTRICT – BEED, MAHARASHTRA (431127) - 431127

GONDIA

1700. BARBATE AUTOMOTIVE INDIA PVT LTD (2004--02), ITI ROAD,NR. FULCHUR NAKA,OPP LAXMI FLOUR MILL,GONDIA - 441601

1701. BARBATE AUTOMOTIVE INDIA PVT LTD (2004--03), ITI KAWLEWADA ROAD, NEAR HIMGIRI LAYOUT, KARANJA, GONDIA, MAHARASHTRA. - 441601

GONDPIPRI

1702. TRISTAR CARS PVT LTD (--01), SURVEY NO. 338 , OPP, POLICE STATION , AHERI CHANDRAPUR ROAD, GONDPIPARI PIN 442702 (MAHARASHTRA) - 442702

GUHAGAR

1703. JAGRUT MOTORS PRIVATE LIMITED (--01), SURVEY NO. 23A, SHRUNGALTALI, GUHAGHAR-CHIPLUN ROAD, GUHAGAR, RATNAGIRI, MAHARASHTRA - 415703

HINGANGHAT

1704. SEVA AUTOMOTIVE PVT LTD (--01), PLOT NO. P-1, HINGANGHAT INDUSTRIAL AREA, NH-7, AJANTI, HINGANGHAT, TALUK – HINGANGHAT, DISTRICT – WARDHA, MAHARASHTRA. - 442301
PH :7722067843.

HINGOLI

1705. PAGARIYA AUTO PVT LTD (--01), PLOT NO.5,7 & 8, SURVEY NO.29/2, AKOLA BY PASS ROAD, HINGOLI. - 431513
PH :8411961177.

HUPARI

1706. SAI SERVICE PRIVATE LIMITED (--01), GAT NO.925/8K/2, PLOT NO.7, HUPARI TO YALGUD ROAD, HUPARI, TAL-HATKANANGALE, DISTRICT – KOLHAPUR. - 416203
PH :9923208454.

ICHALKARANSI

1707. SAI SERVICE PRIVATE LIMITED (--01), GATE NO. 107,KOLHAPUR ROAD,KABNOOR,ICHALKARANJI - 416122

INDAPUR

1708. MAHALAXMI AUTOMOTIVES PVT LTD (--02), STATE HIGHWAY NO. 151, INDAPUR - 412219
PH :8308807314.

ISLAMPUR

1709. CHOWGULE INDUSTRIES PRIVATE LIMITED (--01), GATE NO.905/A/3, NEAR BOMBAY RAYAN, PUNE-BANGALOE HIGHWAY (NH-4), ISLAMPUR TALUKA : WALVA, DIST:SANGLI - 415409

JALGAON

1710. MANRAJ MOTORS PVT LTD (--01), AJINTA ROAD, MIDC INDL AREA, JALGAON - 425003

1711. KHANDESH MOTORS LLP (--01), GAT 248/2, TARSOD-SHIVAR, TAL & DIST - JALGAON, PIN - 425002, MAHARASHTRA - 425002

JALNA

1712. AUTOMOTIVE MANUFACTURERS PVT LTD (2102--02), PLOT NO. 4 & 5 , CTS NO. 11427/4-A, BALAJI COMPLEX, JALNA-AURANGABAD ROAD, JALNA, - 431203
PH :9158000063.

JATH

1713. CHOWGULE INDUSTRIES PRIVATE LIMITED (--05), PLOT NO. 12, SAWANT ESTATE, MORE COLONY, OPP. CATTLE BAZAR, SATARA ROAD, JATH, DISTRICT SANGLI, MAHARASHTRA - 416404

1714. SIDDHI WHEELS (A UNIT OF TARALEKAR MOTORS PVT LTD) (--01), GAT NO- 27/1B, POST-RAMPUR, JATH-SANGLI ROAD, TALUKA-JATH, DISTRICT-SANGLI - 416404
PH :8956454526.

JAYSINGPUR

1715. SAI SERVICE PRIVATE LIMITED (--01), GATE NO. 1239, NEAR ACHRYA TULSI BLOOD BANK, A/P UDGAON(JAYSINGHPUR), TALUKA:SHIROL, DIST: KOLHAPUR - 416134
PH :9673339762.

JEJURI

1716. EXCELL AUTOVISTA PRIVATE LIMITED (--01), GAT NO - 224, AT POST-SAKURDE, JEJURI, TALUKA-PURANDHAR, DISTRICT-PUNE, PIN-412303. - 412303
PH :9146052651.

KADEGAON

1717. CHOWGULE INDUSTRIES PRIVATE LIMITED (--01), GAT NO-248, KARAD ROAD, KADEGAON, TAL-KADEGAON, DIST-SANGLI, MAHARASTRA - 415304

KALWAN

1718. SHAAN CARS PVT LTD (--01), GAT NO. 189, PLOT NO. 7, MALEGAON ROAD, A/P KALWAN, NASHIK. - 423501

KALYAN

1719. AHER AUTOPRIME LLP (--01), SURVEY NO.53 & 54, HIND MILL, OPPOSITE STATE BANK OF INDIA, ANDHARWADI ROAD, KALYAN, MUMBAI - 421301
1720. AHER AUTOPRIME LLP (--02), SURVEY NO.31B,MOHANE ROAD ,NEAR SHAHAD RAILWAY STATION,SHAHAD,KALYAN. - 421103

KAMSHET

1721. SEHGAL AUTORIDERS PVT LTD (--01), AT NAYGAON, POST KAMSHET, TALUKA MAVAL, DISTRICT PUNE, MAHARASHTRA (410405). - 410405
PH :8888881358.

KANKAVALI

1722. JAGRUT MOTORS PRIVATE LIMITED (--05), PLOT NO.32-33,SURVEY NO. -1886/1,,MUMBAI-GOA HIGHWAY (NH-17),JANAVLI,KANKAVLI,MAHARASHTRA - 416002

KANNAD

1723. AUTOMOTIVE MANUFACTURERS PVT. LTD. (--01), SURVEY NO 208/2, NEAR DEEPAK PETROL PUMPCHALISGAON ROAD , KANNAD - 431147

KARAD

1724. CHOWGULE INDUSTRIES PRIVATE LIMITED (--02), 112/3, PUNE-BANGALORE ROAD, NEAR RELIANCE GAS PUMP, A/P MALKAPUR, TAL. KARAD, DISTT. SATARA - 415110
PH :9922569835.

KARANJA

1725. ASPA BANDSONS AUTO (P) LTD (--01), MAA GODAVARI NAGAR, NAGPUR-AURANGABAD HIGHWAY, KARANJA, DISTRICT – WASHIM, MAHARASHTRA - 444104. - 444104

KARJAT

1726. SIMRAN MOTORS PVT LTD (--03), PANVEL-KARJAT ROAD, KARJAT, DIST. RAIGAD - 410201
1727. KANKARIYA AUTOMOBILES PRIVATE LTD (--01), KARJAT-NAGAR ROAD, KARJAT, MAHARASHTRA - 414402
PH :9890843771.

KARMALA

1728. CHAVAN MOTORS DIVISION INDIA PVT LTD (--01), GAT NO. 105, SURVEY NO. 3961, KARMALA-NAGAR ROAD, A/P- KARMALA, TALUKA - KARMALA, DIST.-SOLAPUR. - 413202
PH :8806665691.

KATOL

1729. SEVA AUTOMOTIVE PVT LTD (--01), SURVEY NO-241/1, PLOT NO 03, THOMA LAYOUT JALALKHEDA ROAD,KATOL, MAHARASHTRA - 441302

KAVATE MAHANKAL

1730. CHOWGULE INDUSTRIES PRIVATE LIMITED (--01), MAHANKALI BAAZAR, KAVATE MAHANKAL-JAT ROAD, KAVATE MAHANKAL, SANGLI, MAHARASHTRA - 416405

KHAMGAON

1731. MANRAJ MOTORS PVT LTD (--01), GAT NO 41, OLD SURVEY NO. 12/1A, NEAR AMRUT PETROL PUMP, AKOLA ROAD, KHAMGAON , MAHARASHTRA - 444303

KHANAPUR (SANGLI)

1732. CHOWGULE INDUSTRIES PRIVATE LIMITED (--01), KHANAPUR VITA ROAD, KHANAPUR, TAL-KHANAPUR, DIST-SANGLI - 415307
PH :9767899653.

KHARGHAR

1733. EXCELL AUTOVISTA PRIVATE LIMITED (--01), SURVEY NO.742/439, KOPRA VILLAGE, SECTOR-10, SION-PANVEL HIGHWAY, KHARGHAR, DIST. RAIGAD - 410210

KHED

1734. JAGRUT MOTORS PRIVATE LIMITED (--01), GAT NO - 43/B, MAUZA-BHARNE NAKA, TALUKA-KHED, DIST-RATNAGIRI. - 415709
PH :9689533472.

KHED SHIVAPUR

1735. SEHGAL AUTORIDERS PVT LTD (--01), GATE NO. 763A, PUNE BANGALORE HIGHWAY, VELU VILLAGE, TEHSIL BHOR, OPP. INDIAN - 412205

KHOPOLI

1736. KIRAN MOTORS LIMITED (--01), PLOT NO-68, VILLAGE-MULGAON, KHOPOLI INDUSTRIAL ESTATE, KHOPOLI, TALUKA-KHALAPUR DIST-RAIGARH - 410204

KOLAD

1737. EXCELL AUTOVISTA PVT LTD (--01), GATE NO.154,AT BHUVAN KOLAD,, MUM-GOA HIGHWAY,RAIGAD, - 402112

KOLHAPUR

1738. SAI SERVICE PRIVATE LIMITED (3802-38-01), PLOT NO. 1, E WARD, BEHIND PARVATI TALKIES, SHIVAJI UDYAMNAGAR, KOLHAPUR - 416008
1739. SAI SERVICE PRIVATE LIMITED (3803-38-01), C-6, SHIROLI MIDC, MENON OPP MENON PISTONS,NH-4, KOLHAPUR - 416122
1740. SAI SERVICE PRIVATE LIMITED (3802--06), R S NO. 1018/1, PLOT NO. 28, APATE NAGAR, KALAMBA RING ROAD, KOLHAPUR, MAHARASHTRA. - 416012
1741. KR MOTORS KOLHAPUR PVT LTD (3804-38-01), PLOT NO. 216/2, 216/3, 216/5, NH-4, GOKUL SHIRGAON, KOLHAPUR. - 416234

KONGAON

1742. PRAKASH AUTO PVT LTD (3903--02), SURVEY NO.126/127,98/38,AT & POST KONGAON, - 421302

KOPARGAON

1743. SHAAN CARS PVT LTD (--01), SURVEY NO. 15/36 GAWARE PATIL ESTATE, NAGAR MANMAD HIGHWAY, NEAR ASHOKA HOTEL, KOPARGAON. - 423601
PH :9075028780.

KOREGAON BHIMA

1744. SAI SERVICE PRIVATE LIMITED (--01), GAT NO-373, VILLAGE-KOREGAON BHIMA, TALUKA-SHIRUR, DIST-PUNE. - 415501
PH :7774997005.

KUDAL

1745. JAGRUT MOTORS PRIVATE LIMITED (--01), SURVEY NO. 50/5, 51/5, A/P PINGULI, TEMBDHURI, TALUKA – KUDAL, DISTRICT – SINDUDURG, MAHARASHTRA - 416520

KUDITRE

1746. SAI SERVICE PRIVATE LIMITED (--01), KUDITRE FACTORY PHATA, A/P –KOPARDE, TALUKA-KARVEER, DIST-KOLHAPUR-416205. - 416205
PH :9923208460.

KURUDWADI

1747. CHAVAN MOTORS DIVISION INDIA PVT LTD (--01), GAT NO.:256, BYPASS ROAD, A/P KURDA, TALUKA-MADHA, DISTT. SOLAPUR. - 413208
PH :8806665691.

KURUNDWAD

1748. SAI SERVICE PRIVATE LIMITED (--01), GAT NO. 250, AT POST - KURUNDWAD, TALUKA - SHUROO, DIST.-KOLHAPUR. - 416106
PH :9673339695.

LANJA

1749. JAGRUT MOTORS PRIVATE LIMITED (--01), GAT NO-663, TALUKA-LANJA, DIST - RATNAGIRI, MAHARASHTRA -416701 - 416701
PH :8108718346.

LASALGAON

1750. SHAAN CARS PVT LTD (--01), PLOT NO. 337, LASALGAON MAIN ROAD, LASALGAON, TALUKA – NANDGAON, DISTRICT – NASHIK. - 422306

LATUR

1751. AUTOMOTIVE MANUFACTURERS PVT LTD (--02), C-4/1319/1, SURVEY NO. 89/C, RING ROAD BETWEEN NANDED NAKA AND BABHALGAON NAKA, LATUR, PO & DIST-LATUR,PIN-413512. - 413512

LONAND

1752. SIDDHI WHEELS (A UNIT OF TARALEKAR MOTORS PVT LTD) (--01), SR NO - 353/2, NEAR RAILWAY BRIDGE, PUNE-SATARA ROAD, LONAND, SATARA, MAHARASHTRA – 415521. - 415521

LONAVALA

1753. SEHGAL AUTORIDERS PVT LTD (--01), GATE NO. 120/1, VILLAGE – WAKSAI, TALUKA – MAVAL, LUNAVALA, DISTRICT – PUNE, MAHARASHTRA. - 410405

LONI

1754. MAHALAXMI AUTOMOTIVES PVT LTD (--01), GAT NO. 55/5, SANGAMNER LONI ROAD, LONI, TALUKA-RAHATA, AHMEDNAGAR MAHARASHTRA - 413736

MAHAD

1755. SIMRAN MOTORS PVT LTD (--04), NEAR RELIENCE PUMP, PANVEL-GOA ROAD, MAHAD, DIST. RAIGAD - 402301
PH :9870404323.

MALEGAON

1756. SHAAN CARS PVT LTD (3703--02), GAT NO. 273, POST-TEHARE, MALEGAON, AB HIGHWAY, NH-3, DISTRCT-NASHIK - 423203

MALKAPUR

1757. KR MOTORS KOLHAPUR PVT LTD (--01), AT PO - MALKAPUR, YELANE-SAHUWADI, KOLHAPUR-RATNAGIRI ROAD, DIST-KOLHAPUR, PIN-416105. - 416105

MANCHAR

1758. KOTHARI AUTO WHEELS PVT LTD (--01), SOHAM NAGARI, A-WING, SHOP NO.8 & 16, PUNE NASIK HIGHWAY, A/P MANCHAR, TALUKA: AMBEGAON, DISTT: PUNE, MAHRASHTRA - 410503
PH :8411003608.

MANGALVEDHA

1759. CHAVAN MOTORS DIVISION INDIA PVT LTD (--01), NEAR SWARAJYA HOTEL, PANDHARPUR ROAD, CHOKAMELANAGAR, MANGALWEDHA, MAHARASHTRA, PIN-413305 - 413305
PH :8805778881.

MANGAON

1760. SIMRAN MOTORS PVT LTD (--01), SURVEY NO.97, AT-POST-NANORE, NH-17, MUMBAI-GOA HIGHWAY, MANGAON, RAIGAD, MAHRASTHRA. - 402104
PH :9223181120.

1761. SIMRAN MOTORS PVT LTD (--02), GAT NO-65/2K, NANORE GAON, - 402104

MANMAD

1762. SHAAN CARS PVT LTD (--01), GAT NO. 11/3, PLOT NO. 1 AND SHOP NO. 3 & 4, NANDGAON ROAD, MANMAD. - 423104

MANOR

1763. SAI SERVICE PRIVATE LIMITED (--01), GUT NO. 37, NEAR MSEB POWER STATION, PALGHAR MANOR ROAD, AT POST – TAKVAHAL, DISTRICT – PALGHAR, MANOR. - 401403
PH :9167980005.

MARKAL

1764. MY CAR (PUNE) PVT LTD (--01), SRV NO 1283/2 & 1284, KAMALJAI WASTI, OPP. ENPRO INDUSTIRES, ON ALANDI MARKAL ROAD, A/P MARKAL, TEHSIL-KHED, DIST PUNE, PIN CODE NO. 412105. - 412105

MAUDA

1765. ARUN MOTORS PVT LTD (--01), NEAR NIRMAL UJJWAL BANK,, MAIN ROAD, - 441104

MAYANI

1766. CHOWGULE INDUSTRIES PRIVATE LIMITED (--01), GAT NO - 2101/1, 560/1, MAYANI VADUJ ROAD, A/P- MAYANI, TAL-KHATAV, DIST-SATARA-415102. - 415102
PH :8888866659.

MEDHA

1767. CHOWGULE INDUSTRIES PRIVATE LIMITED (--01), GAT NO-76-24/25,OPP.PWD OFFICE,A/P-JAWALWADI(MEDHA),TAL-JAOLI,DIST-
SATARA, MAHARASHTRA-415012 - 415012

MHASLA

1768. EXCELL AUTOVISTA PRIVATE LIMITED (--01), SURVEY NO-27, VILL- SAVAR, TALUKA-MHASLA, DIST- RAIGAD - 402105

MHASWAD

1769. CHOWGULE INDUSTRIES PRIVATE LIMITED (--01), GAT NO.287/5,SATARA-PANDHARPUR ROAD, , A/P-MHASWAD(MASAIWADI), MAHARASHTRA - 415509

MIRAJ

1770. CHOWGULE INDUSTRIES PRIVATE LIMITED (--03), 42C , OPP. WHISPERING WOODS, MIDC AREA, TALUKA MIRAJ, DISTT. SANGLI, MAHARASHTRA - 416410

MORGAON

1771. MAHALAXMI AUTOMOTIVES PVT LTD (--01), GAT NO-179, MORGAON, - TALUKA- BARAMATI, DIST-PUNE - 412304
PH :9850994014.

MUMBAI

1772. SAI SERVICE PRIVATE LIMITED (--01), 462 SENAPATI BAPAT MARG,WORLI NAKA,LOWER PAREL,MUMBAI - 400013

1773. SAI SERVICE PRIVATE LIMITED (--02), ARVIND CHAMBERS,194 ANDHERI KURLA ROAD, ANDHERI(EAST), MUMBAI - 400069

1774. VITESSE PRIVATE LIMITED (--01), SHAH INDL.ESTATE, PLOT 11 LINK ROAD, ANDHERI (WEST), MUMBAI - 400058

1775. VITESSE PRIVATE LIMITED (--02), 77 AF PALKY GULLY,OFF VEER SAVARKAR MARG, PRABHADEVI, MUMBAI - 400025

1776. SAH & SANGHI AUTO AGENCIES PVT LTD (--01), PRAKASH MILLS COMPOUND,OFF. GLOBE MILLS PASSAGE,WORLI,MUMBAI - 400013

1777. SAI SERVICE PRIVATE LIMITED (--04), C/O SHAKTI INDUSTRIAL WIRE COMPOUND,DATTA PADA ROAD,BORIVILI (EAST),MUMBAI - 400066

1778. AUTOMOTIVE MANUFACTURERS PVT LTD (3901--04), PLOT NO. 108, BAZAR WARD, KURLA(WEST) , MUMBAI - 400070

1779. FORT POINT AUTOMOTIVE CARS PVT LTD (--02), D-9, STREET NO. 21, OPP PATNI COMPUTERS, SEEEPZ, MIDC, ANDHERI, MUMBAI - 400096

1780. SHIVAM AUTOZONE INDIA PVT LTD (--01), CHARKOP INDUSTRIAL ESTATE, KANDIVLI(WEST), MUMBAI, MAHARASHTRA - 400067

1781. VITESSE PRIVATE LIMITED (--07), PLOT NO.A59, KANDIVALI INDUSTRIAL CO-OP. SOC., GOVERNMENT INDUSTRIAL ESTATE, CHARKOP, KANDIVALI (W), MUMBAI - 400067

1782. FORT POINT AUTOMOTIVE CARS PVT LTD (--03), C/O VARUN STEEL INDUSTRIES,AAM TOOL COMPOUND,BOAT HURT ROAD, BEHIND SEWARI POLICE STATION, DARUKHANA, REAY ROAD, MUMBAI - 400010

1783. SHIVAM AUTOZONE INDIA PVT LTD (--02), PLOT NO. 4&5, RAMCHANDRA LANE EXTN., OFF LINK ROAD, KANCHPADA, MALAD-WEST. MUMBAI. 400064. - 400064

1784. VELOX MOTORS PVT LTD (--01), PLOT NO.115/116/117 MIVERVA INDUSTRIAL ESTATE, MULUND-WEST, MUMBAI - 400080

1785. KIRAN MOTORS LIMITED (--01), CTS NO. 170 & 4081, BOMBAY AGRA ROAD, LB SHASTRI MARG, GHATKOPAR (WEST), MUMBAI, MAHARASHTRA, PINCODE: 400086. - 400086

1786. MY CAR (PUNE) PVT LTD (--01), PLOT NO-10, CHANDIVALI ESTATE, CHANDIVALI FARM ROAD, OPP LAKE HOMES, ANDHERI EAST, MUMBAI, MAHARASHTRA - 400072
PH :8104907081.

MURGUD

1787. SAI SERVICE PRIVATE LIMITED (--01), R.S. NO. 188/4, A/P MURGUD, TALUKA: KAGAL, DIST: KOLHAPUR - 416219

MURTIZAPUR

1788. KHANDELWAL AUTOWHEELS PVT LTD (--01), SURVEY NO 38, MAUJA SONORI, NH 06, NEAR HOTEL DEVA, MURTIZAPUR, DISTRICT-AKOLA - 444107
PH :8484063274.

NAGOTHANE

1789. SIMRAN MOTORS PVT LTD (--01), SURVEY NO.241, PLOT NO. 11, MOUJE CHIKANI, ROHA, RAIGADH, - 402106

NAGPUR

1790. SEVA AUTOMOTIVE PVT LTD (2002-20-01), 34/3, KACHIMET AREA, NEAR VAYUSENA NAGAR BUS STOP, WADI, AMRAVATI ROAD, NAGPUR - 440023

1791. AUTOMOTIVE MANUFACTURERS PVT LTD (2001-20-02), 575 KAMPTEE ROAD,NAGPUR-26,, - 440026

1792. SEVA AUTOMOTIVE PVT LTD (2002-20-03), PLOT NO. 33A, CENTRAL MIDC, HIGNA ROAD, NAGPUR, MAHARASHTRA, - 440016

1793. BARBATE AUTOMOTIVE INDIA PVT LTD (2004-20-01), NEAR PARDY NAKA (OUTSIDE), NH-6, BHANDARA ROAD,NAGPUR - 440035

1794. AUTOMOTIVE MANUFACTURERS PVT LTD (2001-20-05), PLOT NO. 38/1, NEAR BOUDDHA VIHAR, OPP. DELHI PUBLIC SCHOOL, KAMPTEE ROAD, NAGPUR, MAHARASHTRA - 441001

1795. BARBATE AUTOMOTIVE INDIA PVT LTD (2007--01), PLOT NO. 4, NEW COTTON MARKET, GHAT ROAD, NAGPUR, MAHARASTRA - 440018
PH :8888859542.

1796. BARBATE AUTOMOTIVE INDIA PVT LTD (2007--02), PLOT NO. 131, NH-6, BHANDARA ROAD, MAHALGAON, NAGPUR, MAHARASTRA. - 441202
PH :8888820312.

1797. SEVA AUTOMOTIVE PVT LTD (2002--04), PLOT NO.05, 12, 13A, 13B CHANDRABHAGA GRUHA NIRMAN SAHAKARI LIMITED, KH NO.45/3, CITY SURVEY NO.570, MANEWADA RING ROAD, NAGPUR, MAHARASHTRA - 440027
PH :8390446644.

1798. ARUN MOTORS PRIVATE LIMITED (2008--01), PLOT NO-9&10, PATNI PLAZA, KHAMLA RING ROAD, SAWARKAR NAGAR, NAGPUR, MAHARASHTRA - 440025

1799. ARUN MOTORS PRIVATE LIMITED (2008--02), C-48/1, MIDC HINGNA MAIN ROAD, WADI, NAGPUR, PIN-440028, MAHARASHTRA - 440028
PH :7757988800.

1800. SEVA AUTOMOTIVE PVT LTD (2009-20-01), P.S.K 14, REVENUE CIRCLE, KH NO.84, NEAR KORADI POLICE STATION, PANJARA - 480115

NALASOPARA

1801. SHIVAM AUTOZONE INDIA PVT LTD (--01), SURVEY NO. 91,92 , PLOT NO. 7, VILLAGE-DHANIV, NALASOPARA, DIST. PALGHAR, MAHARASHTRA. - 401209

NANDED

1802. SEVA AUTOMOTIVE PVT LTD (6801-68-01), GAT NO-126, NEAR SUNDER PETROL PUMP, A/P PIMPALGAON MAHADEO, TQ-ARDHAPUR, NAGPUR-NANDED HIGHWAY,NANDED, MAHARASHTRA-431704 - 431604
PH :7447415607.

NANDURBAR

1803. SEVA AUTOMOTIVE PVT LTD (--02), P NO.-324, BASILAL NAGAR SHAHADA BYPASS ROAD, NEAR HOTEL KAREN GARDEN, CHAUFULLY NANDURBAR-425412 - 425412
PH :7720017528.

NARAYANGAON

1804. KOTHARI AUTO WHEELS PVT LTD (--01), GATE NO. 747, PUNE NASIK HIGHWAY, WARULWADI, NARAYANGAON - 410504
PH :8411003608.

NASHIK

1805. AUTOMOTIVE MANUFACTURERS PVT LTD (3702-37-01), P-1-12,ADDITIONAL NASIK INDL. AREA,AMBAD,NASIK - 422010

1806. SEVA AUTOMOTIVE PVT LTD (3701-37-01), PLOT NO. X - 46,MIDC. AMBAD, NASIK - 422010

1807. SHAAN CARS PVT LTD (3703-37-01), E-3 MIDC AREA,SATPUR , NASIK,MAHARASHTRA - 422007

1808. SHAAN CARS PVT LTD (3703-37-04), 03/810, NEAR NASARDI BRIDGE, WADALA ROAD, NASIK ROAD, NASIK - 422011

1809. SEVA AUTOMOTIVE PVT LTD (3701-37-06), SEVA FARMS, GATE NO. 82/2, AMBE BAHULA ROAD, VILHOLI, TALUKA & DISTRICT: NASIK, MAHARASHTRA - 422010
PH :9146000709.

1810. SEVA AUTOMOTIVE PVT LTD (--07), PLOT NO.A-23, NICE INDUSTRIAL AREA, MIDC, SATPUR, NASIK (MAHARASHTRA) - 422006

1811. SEVA AUTOMOTIVE PVT LTD (-37-08), SHOP NO. 1 & 2, SER. NO. 241/1-B-1/2, OPPOSITE NMC SCHOOL, DINDORI ROAD, MAHSRUL, NASHIK, MAHARASHTRA - 422004

1812. SHAAN CARS PVT LTD (3703-37-05), SURVEY NO. / PLOT NO. 02, ADGAON, D-MART, MUMBAI AGRA HIGHWAY, NASHIK - 423101
1813. SHAAN CARS PVT LTD (--06), SURVEY NO.72/2, VIHITGAON-VADNER ROAD, DEOLALI, NASHIK - 422401

NASRAPUR

1814. CHOWGULE INDUSTRIES PRIVATE LIMITED (--01), GAT NO-152/2, PUNE SATARA HIGHWAY, AT POST: NASRAPUR CHELADI, TALUKA - BHOR, PUNE, MAHARASHTRA - 412213

NAVI MUMBAI

1815. AUTOMOTIVE MANUFACTURERS PVT LTD (3901--01), D-234 MIDC TTC INDL AREA,SHIRVANE NERUL,NEW BOMBAY, - 400706
1816. EXCELL AUTOVISTA PRIVATE LIMITED (--02), PLOT NO-9,MIDC,NAVADE,TALOJA, TAL-PANVEL ,DIST-RAIGAD - 410208
1817. SIMRAN MOTORS PVT LTD (3913--01), CAMEO FABRIC COMPANY, GEN 16, NEAR SULZER COMPANY, DIGHA, TTC AREA, AIROLI - 400701
1818. MY CAR (PUNE) PVT LTD (--01), A-751/2, MIDC TTC, TURBHE MAHAPE ROAD, PAWANE, NAVI MUMBAI - - 400071
1819. SAI SERVICE PRIVATE LIMITED (--06), D 42, TTC INDUSTRIAL AREA, NAVI MUMBAI, PIN-400705 - 400705

NERAL

1820. EXCELL AUTOVISTA PRIVATE LIMITED (--01), NEAR OLD JAKAT NAKA, GANESH NAGAR, PAYARMAL, NERAL, TALUKA - KARJAT, DISTRICT - RAIGAD, MAHARASHTRA (410101). - 410101

NESARI

1821. KR MOTORS KOLHAPUR PVT LTD (--01), S NO. 2452, SUNDAR NAGAR, A/P NESARI, TAL-GADINGLAJ, DIST- KOLHAPUR-416504. - 416504

NEVASA

1822. KANKARIYA AUTOMOBILES PRIVATE LTD (--01), BELOW ADARSH GRAMIN BANK, OPP. ILAKSHI MOTORS, NEVAS PHATA, AURANGABAD ROAD, TALUKA – NEVASA, DISTRICT – AHMEDNAGAR. - 414603
PH :9420494601.

NIPHAD

1823. SHAAN CARS PVT LTD (--01), GAT NO. 99/3, RASALPUR AURANGABAD HIGHWAY, NIPHAD, DISTRICT – NASHIK, MAHARASHTRA. - 422303
PH :9075028780.

OSMANABAD

1824. CHAVAN MOTORS DIVISION INDIA PVT LTD (--03), PLOT NO. A-53, INDUSTRIAL AREA, MIDC, OSMANABAD - 413501
PH :8888867861.

OTUR

1825. KOTHARI AUTO WHEELS PVT LTD (--01), GAT NO-184/3/B, ALEPHATA-KALYAN ROAD, OPP HP PETROL PUMP, VILLAGE-OTUR, TALUKA-JUNNAR, DIST-PUNE - 412409
PH :8411003608.

PABAL

1826. MAHALAXMI AUTOMOTIVES PVT LTD (--01), 3733, SHINALKAR WASTI, PABAL, TALUK SHIRUR, PUNE, PIN 412403 - 412403
PH :8956288087.

PADGHA

1827. SHIVAM AUTOZONE INDIA PVT. LTD. (--01), SHOP NO.7/8,TRADE CENTRE,, MUMBAI NASHIK HW,NEAR PADGHA TOLL PLAZA, - 421101

PAITHAN

1828. PAGARIYA AUTO PVT LTD (--01), GAT NO-277, MAUZA- PAITHAN, TALUKA- PAITHAN, DIST - AURANGABAD 431107. - 431107
PH :9922994237.

PALGHAR

1829. SAI SERVICE PRIVATE LIMITED (--01), SURVEY NO. 86/1, TEMBHODE, MANOR-MAHIM ROAD, PALGHAR, DISTRICT: THANE - 401404

PALUS

1830. CHOWGULE INDUSTRIES PRIVATE LIMITED (--04), PLOT NO.B-3, MIDC AREA, TALUKA PALUS, DISTT. SANGLI. - 416308
PH :8888870122.

PANDHARPUR

1831. CHAVAN MOTORS DIVISION INDIA PVT LTD (--05), 410/A/3, A/P- WAKHARI, PHALTAN ROAD,PANDHARPUR, DIST-SOLAPUR.

GAT NO.56, ESABAVI, PUNE ROAD, TAL:PANDERPUR, SOLAPUR - 413001
PH :7774997005.

PANVEL

1832. SIMRAN MOTORS PVT LTD (--01), PLOT2-8,SECTOR-15, OPP. HOTEL GARDEN,OLD MUMBAI PUNE HIGHWAY,PANVEL - 410206
1833. AUTOMOTIVE MANUFACTURERS PVT LTD (3901--03), PLOT NO:92/1, VILLAGE KOLAKHA, MUMBAI-GOA HIGHWAY, PANVEL, DISTT. RAIGAD - 410206
1834. K.T.S. AUTOMOTORS PVT LTD (--01), VILLAGE: APTA, OPP. APTA RAILWAY STATION, LADIWALI, DIST: RAIGAD, PANVEL (MAHARASHTRA) - 410207

PARATWADA

1835. ASPA BANDSONS AUTO (P) LTD (--01), SURVEY NO. 26/4A, RAMGAON, AMRAVATI PARATWADA ROAD, NEAR JAWARDI PHATA, PARATWADA TALUKA – ACHALPUR, DISTRICT – AMRAVATI . - 444805
PH :8888897629.

PARBHANI

1836. PAGARIYA AUTO PVT LTD (--01), SURVEY NO-301, PLOT NO-86/A, OPP GULMOHAR LODGE, BASMAT ROAD, PARBHANI - 431401
PH :9511868433.

PARGAON

1837. MAHALAXMI AUTOMOTIVES PVT LTD (--01), PARGAON PHATA, KEDGAON PARGAON ROAD, PARGAON, PUNE, MAHARASHTRA - 412203. - 412203

PATAN

1838. CHOWGULE INDUSTRIES PVT. LTD. (--01), GAT NO.1543/K/PLOT NO.2,, A/P-MHAVSHI,PATAN-MANDURE ROAD, - 415206

PATAS

1839. MAHALAXMI AUTOMOTIVES PVT LTD (--03), PUNE-SOLAPUR HIGHWAY, PATAS, TALUKA DAUND DISTT.-PUNE - 413106
PH :8888890957.

PEN

1840. SIMRAN MOTORS PVT LTD (--01), AT SURVEY NO 75, PLOT NO 2, MUMBAI-GOA HIGHWAY, WADHKAL (PEN) - 402107
PH :9503381198.

PHALTAN

1841. CHOWGULE INDUSTRIES PRIVATE LIMITED (--01), PLOT NO.83/1B/1, LONAND-PUNE ROAD, PHRANANDWADI, TALUKA:PHALTAN, DISTRICT: SATARA, MAHARASTRA. - 415523
PH :8888886301.

PIMPLEGAON

1842. AUTOMOTIVE MANUFACTURERS PVT LTD (--01), GAT NO.517/P NEAR MARKET COMMITTEE, MUMBAI AGRA HIGHWAY, NH3 A/P PIMPALGAON BASWANT, TALUKA: NIPHAD, DIST-NASHIK - 422202

PIRANGUT

1843. MY CAR (PUNE) PVT LTD (--01), GAT NO-314, AT VILLAGE-KASAR AMBOLI, PIRANGUT, TALUKA -AMBOLI, DIST-PUNE, PIN-412108. - 412108
PH :9325424613.

POYNAD

1844. MY CAR (PUNE) PVT LTD (--01), SURVEY NO-52/2, SUBASH NAGAR, MUMBAI-GOA HIGHWAY, A/P-AMBEPUR, POYNAD, TALUKA-ALIBAUG, DIST-RAIGAD, PIN-402108. - 402108

PULGAON

1845. SEVA AUTOMOTIVE PVT LTD (--01), PLOT NO. 33, MOUZA – CHITKI, MOUZA NO – 2/33, HINDUSTAN COLONY, WARDHA ROAD, GRAM PANCHAYAT – LAXMINARAYANPUR, AT POST – PULGAON, TEHSIL – DEOLI, DISTRICT -WARDHA. - 442302

PUNE

1846. SAI SERVICE PRIVATE LIMITED (1901-19-01), BOMBAY PUNE ROAD, FUGEWADI, PUNE - 411012
1847. SAI SERVICE PRIVATE LIMITED (1901-19-02), 889/90 J.M.ROAD, DECCAN GYMKHANA, PUNE - 411004
PH :9923208347.
1848. CHOWGULE INDUSTRIES PRIVATE LIMITED (1908-19-02), S.NO. 53,PUNE SATARA HIGHWAY,KATRAJ,PUNE - 411046
1849. SAI SERVICE PRIVATE LIMITED (1901-19-03), S.NO.15A GIDWANI COMPOUND, KONDWA BUDRUK, HAVELI, PUNE - 411046
PH :9923208345.
1850. WONDER CARS PVT LTD (1903-19-02), 12, NPS LINES,SOLAPUR ROAD,,OLD POOL GATE,CAMP, PUNE - 411001
1851. KOTHARI AUTO WHEELS PVT LTD (1984-19-01), 110/A, PUNE SOLAPUR ROAD, NEAR FATIMA NAGAR, PUNE - 411039
PH :7498272309.
1852. MY CAR (PUNE) PVT LTD (1907-19-01), SURVEY NO. 131, MUMBAI BANGALORE HIGHWAY, WAKAD, PUNE - 411057
1853. CHOWGULE INDUSTRIES PRIVATE LIMITED (1911-19-01), S.NO.1, NEXT TO PODAR INTERNATIONAL SCHOOL, KATRAJ BYPASS ROAD, AMBEGAON-B, TALUKA-HAVELI, PUNE - 411046
1854. SAI SERVICE PRIVATE LIMITED (1901-19-05), NEAR NIGDI-BHOSARI ROAD, CHINCHWAD, PUNE - 411019
1855. SEHGAL AUTORIDERS PVT LTD (1913-19-01), SURVEY NO. 51, BAVDHAN KHRUD, TAL: HAVELI, DIST: PUNE - 411021
1856. SAI SERVICE PRIVATE LIMITED (1901-19-06), SURVEY NO.244/1, PHASE-II, NEAR BANK OF MAHARASHTRA, HINGEWADI, TAL - MULSHI, DISTRICT-PUNE,MAHARASHTRA - 411057
PH :9923208302.
1857. KOTHARI AUTO WHEELS PVT LTD (1984--03), PLOT NO. 2B, D1 BLOCK, CHINCHWAD, PUNE, DIST. PUNE - 411019
PH :9168662302.
1858. MAHALAXMI AUTOMOTIVES PVT LTD (1912--03), 59/A, MUNDHWA KHARADI ROAD, OPP. MUNDHWA POLICE STATION, MUNDHWA, PUNE, MAHARASHTRA - 411036
PH :8888874980.

1859. SAI SERVICE PRIVATE LIMITED (1901--07), 4/A/1A, 1/3 A, SALUNKE VIHAR ROAD, BORADE NAGAR, KONDWA, PUNE, MAHARASHTRA. - 411048
PH :9923208358.
1860. WONDER CARS PVT LTD (1903--03), PLOT NO.52/1 BLOCK F2, MIDC, PIMPRI, PUNE. - 411018
1861. MAHALAXMI AUTOMOTIVES PVT LTD (1912--04), NO.485/1, CTS NO.1041, OM SUPER MARKET, GHOKALE CROSS ROAD, MODEL COLONY, SHIVAJI NAGAR, PUNE - 411016
PH :8888842887.
1862. CHOWGULE INDUSTRIES PRIVATE LIMITED (1908-19-05), 129/2/B/1, NEW PUNE MUMBAI HIGHWAY, KATRAJ DEHU ROAD BYPASS, TATHWADE, TAL-MULASHI, DISTT. PUNE (MAHARASHTRA) - 411033
1863. SAI SERVICE PRIVATE LIMITED (1901--08), SURVEY NO. 37, HISSA NO. 2, SITUATED AT WADGAON KHURD, NEAR NANDED CITY, SINHAGAD ROAD, TALUKA - HAVELI, DISTRICT - PUNE, MAHARASHTRA. - 411041
PH :9923208312.
1864. KOTHARI AUTO WHEELS PVT LTD (1984--05), PLOT NO. 24/B, HADAPSAR INDUSTRIAL ESTATE, PUNE. - 411028
1865. CHOWGULE INDUSTRIES PRIVATE LIMITED (1908--06), SR. NO.- 43/44/S, 7 PARVATI INDUSTRIAL ESTATE, OPP. ADINATH SOCIETY, PUNE- SATARA ROAD, PUNE. - 411009
1866. EXCELL AUTOVISTA PRIVATE LIMITED (1917--01), GATE NO.1232, 10TH MALL, PUNE SASWAD ROAD, VILLAGE – WADKI, TAL – HAVELI, DIST PUNE. - 412308
1867. KOTHARI AUTO WHEELS PVT LTD (1984--06), SURVEY NO.46, HISSA 9/1 (CITY SURVEY NO.6181+6180), WADGAON SHERI, CHANDAN NAGAR, PUNE NAGAR ROAD, TAL-HAVELI, PUNE. - 411014
PH :8411003631.
1868. SUMANKIRTI CARS PVT LTD (1915-19-02), SURVEY NO. 9, NEAR BALEWADI SPORTS STADIUMM MUMBAI-BANGALORE HIGHWAYS, MAHALUNGE PUNE, MAHARASHTRA. - 411045
PH :8551990106.
1869. MY CAR (PUNE) PVT LTD (1918-19-01), GAT NO. 625, HISSA NO. 1/3/1, VILLAGE – KURULI, TALUKA – KHED, CHAKAN, DISTRICT – PUNE. - 410501
PH :7755900000.
1870. WONDER CARS PVT LTD (1903--04), SURVEY NO. 20, HISSA NO. 1/1/2, THERGAON, BAL KRISHNA MANGAL KARYALAYA, TALUKA – MULSHI, DANGE CHOWK, PUNE – 411 033. - 411033
PH :7887883311.
1871. MAHALAXMI AUTOMOTIVES PVT LTD (1912-19-05), LANE NO 9, SANT NAGAR, BEHIND IOCL PETROL PUMP, LOHEGAON, PUNE, MAHARASHTRA-411047 - 411047
PH :8956045026.
1872. MY CAR (PUNE) PVT LTD (1918-19-02), GAT NO 624. HISSA NO. 5/2, VILLAGE-KURULI, CHAKAN, TAL. KHED, DIST. PUNE, NEAR SAI EXPRESS WAY PETROL PUMP, PIN-410501. - 410501
1873. CHOWGULE INDUSTRIES PRIVATE LIMITED (1908-19-07), SURVEY NO 245/6,7,9/1, KHARABWADI CHAKAN - 410501
1874. EXCELL AUTOVISTA PRIVATE LIMITED (1917-19-02), S.NO. 41/2B/1 PART CHOUDHARI VASTI, KHARADI, PUNE - 411014

PUSAD

1875. HIMALAYA CARS (--01), OPP P N COLLEGE, GAIMUKH NAGAR,YAVATMAL / DIGRAS ROAD, PUSAD – 445204 (DIST YAVATMAL, MAHARASHTRA) - 445204

RAHATA

1876. KANKARIYA AUTOMOBILES PRIVATE LTD (--01), SHIRDI ROAD, SAKORI, RAHATA, - 423107
PH :8275033313.

RAHURI

1877. KANKARIYA AUTOMOBILES PRIVATE LTD (--01), TRIMURTI CRANE SERVICE, NAGAR-MANMAD ROAD, RAHURI, MAHARASHTRA. - 413705
PH :9420036767.

RAJAPUR

1878. JAGRUT MOTORS PRIVATE LIMITED (--01), SURVEY NO. 14/8, TARALWADI, RAJAPUR, DIST: RATNAGIRI - 416702

RAJGURUNAGAR

1879. MY CAR (PUNE) PVT LTD (--01), SURVEY NO.94, SANDBHORWADI, NEAR TUKAI MANDIR, PUNE-NASIK HIGHWAY, TAL-KHED, RAJGURUNAGAR DISTT. PUNE. - 410505
PH :9112231553.

RAMTEK

1880. SEVA AUTOMOTIVE PVT LTD (--01), MOUZA NO 275, P H NO 24, GRAM PANCHAYAT - MANSAR,TEHSIL - RAMTEK, DISTRICT - NAGPUR, MAHARASHTRA. - 441401
PH :7758028060.

RATNAGIRI

1881. JAGRUT MOTORS PRIVATE LIMITED (--01), D-25,,MIDC MIRJOLE,MAHARASTRA,RATNAGIRI - 415639

ROHA

1882. EXCELL AUTOVISTA PRIVATE LIMITED (--01), SHOP NO. 1 & 2, PANCHARATNA APARTMENTS, ROHA, ROHA KOLAD ROAD, RAIGAD - 402109
PH :9209200073.

SAKOLI

1883. AUTOMOTIVE MANUFACTURERS PVT LTD (--01), PLOT NO. 7, GAT NO. : 271/1/4, MOUZA - JAMBHALI, TAHSIL - SAKOLI, DIST : BHANDARA, PIN – 441802. - 441802

SANGAMNER

1884. SHAAN CARS PVT LTD (--01), GAT NO. 173/4/5/6, A/P VELHALE, NASHIK PUNE HIGHWAY, SANGAMNER , DIST AHMEDNAGAR, MAHARASHTRA - 422605

SANGLI

1885. CHOWGULE INDUSTRIES PRIVATE LIMITED (--01), GAT NO.243 SANGLI KOLHAPUR ROAD, OPP. TO GAJANAN MAHARAJ MANDIR, ANKALI, TAL-SANGLI, DISTT. SANGLI - 416416
PH :9850966805.
1886. SIDDHI WHEELS (A UNIT OF TARALEKAR MOTORS PVT LTD) (--01), SR NO. 917//2/B, SANGLI MIRAJ ROAD, MIRAJ, DISTRICT - SAGLI. - 416410

SANGOLA

1887. CHAVAN MOTORS DIVISION INDIA PVT LTD (--01), GAT NO. 276/14/A, MAIN ROAD, KOLHAPUR HIGHWAY, A/P & TALUKA - SANGOLA, DIST. -SOLAPUR. - 413307
PH :8806665691.

SANKH

1888. CHOWGULE INDUSTRIES PRIVATE LIMITED (--01), SURVEY NO-394/5, VILLAGE- SANKH, TALUKA-JATH, DIST- SANGLI, MAHARASHTRA - 416413

SAPHALE

1889. SUPREME AUTOMOBILES (A UNIT OF RELIABLE AUTOMOTIVE PVT LTD) (--01), H.NO.1137/1138/1139, , NUTAN NAGAR,MAKNE THEMHIKODAWE ROAD, MAHARASHTRA - 401102

SASWAD

1890. CHOWGULE INDUSTRIES PRIVATE LIMITED (1908--03), SOLAPUR HIGHWAY, SASWAD, DIST. PUNE - 412301

SATANA

1891. SHAAN CARS PVT LTD (--01), GAT NO 322/2/A/7, PUNDLIK NAGAR MALEGAON ROAD, AT POST SATANA DIST NASHIK - 423301 - 423301
PH :9922969656.

SATARA

1892. CHOWGULE INDUSTRIES PRIVATE LIMITED (--01), PLOT NO. B-2,OLD MIDC,SATARA - 415002

SAVNER

1893. BARBATE AUTOMOTIVE INDIA PVT LTD (--01), PLOT NO.2, MADANE LAYOUT, MOUZA GUJARKHEDI, NR. INDIAN PETROL PUMP, NAGPUR ROAD, SAVNER DISTT. NAGPUR, - 441107
PH :8888859546.

SAWANTWADI

1894. JAGRUT MOTORS PRIVATE LIMITED (--01), SHIVSHAMBHO APARTMENT, 1190, A/P KOLGAON, SURVEY NO.187, HISSA NO.33B, TAL-SAWANTWADI, DISTT. SINDHUDURG. - 416510

SHAHAPUR

1895. SHIVAM AUTOZONE INDIA PVT LTD (--01), DR. DESHPANDE COMPOUND, NEAR BHATSA COLONY, VILLAGE – GOTHEGHAR, TALUKA – SHAHPUR, DISTRICT – THANE, MAHARASHTRA - 421601
PH :7718893483.

SHAHUWADI

1896. SAI SERVICE PRIVATE LIMITED (--01), GATE NO. 1213, R/AT DONOLI, TALUKA - SHAHUWADI, DIST.-KOLHAPUR - - 416213
PH :9923208448.

SHILTPATA

1897. VELOX MOTORS PVT LTD (--01), SURVEY NO-99/2B, VILLAGE-DAIGHAR, KALYAN SHIL-PHATA ROAD, NEAR DATTA MANDIR, POST-PADALE, DIST-THANE, PIN-421204. - 421204
PH :8419984188.

SHIRUR

1898. MAHALAXMI AUTOMOTIVES PVT LTD (1912--02), 1023/1, NEXT INDIAN OIL PETROL PUMP, SARADWADI, PUNE-AHMEDNAGAR HIGHWAY, TAL: SJIRUR, DIST: PUNE, MAHARASHTRA - 412210

SHIRWAL

1899. CHOWGULE INDUSTRIES PRIVATE LIMITED (--01), GAT NO.175, A/P SHINDEWADI, SHIRWAL-BHOR ROAD, SHIRWAL, TAL KHANDALA, DISTT. SATARA - 412801
PH :9637399003.

SHRIGONDA

1900. MAHALAXMI AUTOMOTIVE PVT. LTD. (--01), GAT NO.2378/1/1/1,, RAILWAY STATION ROAD,VILLAGE SHREEGONDA, - 413701

SHRIRAMPUR

1901. KANKARIYA AUTOMOBILES PRIVATE LTD (--01), S.NO.139/1/3, NEAR NAKA NO.4, SANGAMNER ROAD, SHRIRAMPUR DISTT. AHMEDNAGAR - 413709
PH :9420494543.

SIKRAPUR

1902. EXCELL AUTOVISTA PRIVATE LIMITED (--01), AT POST SHIKARPUR MALTHAN PHATA, OPP. CHAURASIYA CHANA CENTER, PUNE NAGAR ROAD, TALUKA SHIRUR, DIST. PUNE, PIN-412208, PUNE - 412208
PH :9146194973.

SILLOD

1903. PAGARIYA AUTO PVT LTD (2103--04), PLOT NO. 19/20, SURVEY NO. 386, AURANGABAD NAKA, SILLOD, AURANGABAD - 431112
PH :8600037213.

SINNAR

1904. SHAAN CARS PVT LTD (3703--03), A-24, MIDC AREA MALEGAON,SINNAR TAL- SINNAR,, - 422103

SOLAPUR

1905. CHAVAN MOTORS DIVISION INDIA PVT LTD (--02), 150, AKALKOT ROAD,OPP. SVCS HIGH SCHOOL,SOLAPUR, - 413006
1906. CHAVAN MOTORS DIVISION INDIA PVT LTD (--01), 18,39, INDUSTRIAL ESTATE,HOTAGI ROAD,SOLAPUR, - 413224
PH :8805778881.
1907. CHAVAN MOTORS DIVISION INDIA PVT LTD (--06), PLOT NO.95, IND. ESTATE, HOTAGI ROAD, SOLAPUR. - 413003
PH :8805986826.

TALASARI

1908. SHIVAM AUTOZONE INDIA PVT LTD (--01), SURVEY NO. 191/1 PLOT NO. 5, AT-POST – VADAVALI, NH-8, TALASARI, THANE, MAHARASHTRA - 401606

TALEGAON DABHADE

1909. MY CAR (PUNE) PVT LTD (--01), SR.NO.113, HISSA NO.1/3/2/A, MUMBAI PUNE OLD HIGHWAY, MAVAL, TALEGAON - 410506
PH :9730855855.

TASGAON

1910. SIDDHI WHEELS (A UNIT OF TARALEKAR MOTORS PVT LTD) (--01), SHETKARI MARKET, NEAR ISHA HOTEL, TASGAON-SANGLI ROAD, TALUKA - TASGAON, DIST.-SANGLI. - 416312
PH :8275030748.

TEMBHURNI

1911. CHAVAN MOTORS DIVISION (I) PVT LTD (--01), GAT NO.560/2/A,OLD PUNE ROADNEAR SUMAN THEATRE, TEMBHURANI - 413221

THANE

1912. PRAKASH AUTO PVT LTD (3903-39-01), U NO-3,SHEET NO. 30,VITHALWADI STATION ROAD, ULHASNAGAR - 421003
1913. FORT POINT AUTOMOTIVE CARS PVT LTD (3906-39-01), KOTHARI WAREHOUSE NO. 111,POKHRAN ROAD NO. 11,MANPADA, CHATALSAR,THANE - 400607
1914. NAVNIT MOTORS PVT LTD (3908-39-02), B R T PLOT ,THANE (W) ,MAHARASHTRA - 400607
1915. VELOX MOTORS PVT LTD (--02), NEW SURVEY NO. 17/1/B, NEAR BLUE ROOF CLUB, VILLAGE - OWALE, GHODBUNDER ROAD, THANE (W). - 400615
1916. SUPREME AUTOMOBILES (A UNIT OF RELIABLE AUTOMOTIVE PVT LTD) (3915-39-01), BRILLIANT COMPLEX, WESTERN EXPRESS HIGHWAY, MIRA ROAD, THANE- 401107. - 401107
PH :8591942704.
1917. VELOX MOTORS PVT LTD (3914-39-01), PLOT NO: A-66, ROAD NO 21, NEHRU NAGAR, WAGLE INDUSTRIAL ESTATE, THANE WEST, MAHARASHTRA - 400604

TITWALA

1918. AHER AUTOPRIME LLP (--01), SURVEY NO. 23/2, SHOP NO. 3, NEAR GOVELI, TITWALA ROAD, GHOTSAI, TITWALA, PIN-421301, MAHARASHTRA - 421301
PH :18008334369.

TRIMBAK

1919. SHAAN CARS PVT LTD (--01), SURVEY NO. 260/3, OPPOSITE MSEB OFFICE, NEAR GOVT. GEST HOUSE; SWAMI SAMARTH BUS STOP; TRIMBAKESHWAR-NASHIK HIGHWAY; AT POST/TAL: TRIMBAKESHWAR DIST: NASHIK PIN: 422212 - 422212

TUMSAR

1920. AUTOMOTIVE MANUFACTURERS PVT LTD (--01), GAT NOS. 1350/149 & 1350/150, VILLAGE TUMSAR, TQ TUMSAR, DIST.- BHANDARA, STATE-MAHARASHTRA - 441912
PH :7391075992.

ULWE

1921. MY CAR (PUNE) PVT LTD (--01), SURVEY NO-97/8, HOUSE NO-1498, A/P JASAI, ULWE, TEHSIL-URAN, DIST-RAIGAD, PIN NO-410206. - 410206

UMADI

1922. SIDDHI WHEELS (A UNIT OF TARALEKAR MOTORS PVT LTD) (--01), 182/2, INDRAYANI SANKUL, JATH ROAD, UMADI, TALUKA-JATH, PIN-416413. - 416413

UMBRAJ

1923. CHOWGULE INDUSTRIES PRIVATE LIMITED (--01), SHOP-4,5,6 - GANRAJ COMPLEX, GAT NO. -213, UMBRAJ, TAL-KARAD, DIST-SATARA - 415109

UNDRI, PUNE

1924. KOTHARI AUTO WHEELS PVT. LTD. (--07), 312/1/11, KATRAJ BYPASS ROAD,, OPP. INDIAN OIL PETROL PUMP, URALI - 412307

URALI KANCHAN

1925. EXCELL AUTOVISTA PRIVATE LIMITED (--01), GAT NO-244, VILLAGE-SORTAPWADI, TALUKA -HAVELI, URULI KANCHAN, DIST-PUNE, PIN-412201 - 412201
PH :8097452280.

VADUJ

1926. CHOWGULE INDUSTRIES PRIVATE LIMITED (--03), KALEVASTI, VADUJ DAHIWADI ROAD , VADUJ - 415506
PH :8888866659.

VAIJAPUR

1927. PAGARIYA AUTO PVT LTD (--01), NEAR SUBHASH BUNGLOW, STATION ROAD, VAIJAPUR, AURANGABAD. - 423701
PH :9922994237.

VASAI

1928. SAI SERVICE PRIVATE LIMITED (--01), ANDRADESH BHAVAN, SURVEY #27 A,NEAR UMELA PHATAK, VASAI (WEST), DIST. THANE, MAHARASTRA - 401202
1929. SAI SERVICE PRIVATE LIMITED (--03), C/O MR. KENNETH NICHOLAS D'SOUZA, SURVEY NO-89, SATIVALI ROAD, VILLAGE-WALIV, VASAI (EAST), DIST-PALGHAR, MAHARASHTRA, PIN-410208 - 401208
1930. SAI SERVICE PRIVATE LIMITED (--04), SURVEY NO. 152, VASAI MUMBAI HIGHWAY, BEHIND INDIA OIL PETROL PUMP, SASUNAVGARH - 401208

VASIND

1931. SUPREME AUTOMOBILES (A UNIT OF RELIABLE AUTOMOTIVE PVT LTD) (--01), NISARG GARDEN RESORT, MUMBAI NASHIK HIGHWAY NH3,VASIND WEST, - 421601

VELHE

1932. SUMANKIRTI CARS PVT LTD (--01), MAUZA NO-492/2, A/P-VELHA, TAL- VELHA, DIST-PUNE-412212 - 412212

VIKRAMGADH

1933. SHIVAM AUTOZONE INDIA PVT LTD (--01), NEAR GOVERNMNET DISPENSARY HOSPITAL, DAHANU ROAD, TEHSIL-VIKRAMGADH, DIST-PALGHAR-401605 - 401605
PH :8082551080.

VIRAR

1934. SAI SERVICE PRIVATE LIMITED (--02), SURVEY NO.16, AGASHI ROAD, PADMAN NAGAR, VIRAR-WEST, DISTT. PALGHAR. - 401301

VITA

1935. CHOWGULE INDUSTRIES PRIVATE LIMITED (--01), S NO. 900, HISSA NO. 1,2,3/1/2, SANGLI VITA ROAD, VITA, TALUKA – KHANAPUR, DISTRICT – SANGLI, MAHARASHTRA - 415311
PH :8888870120.

WADA

1936. SHIVAM AUTOZONE INDIA PVT LTD (--01), SURVEY NO-133/7/1, SAIKRUPA BUILDING, WADA-BHIWANDI ROAD, VILLAGE-GANDHARE, TAL-WADA, DIST -PALGHAR 421303. - 421303

WAGHOLI

1937. SAI SERVICE PRIVATE LIMITED (1901--04), GAT NO 2406/1440, VILLAGE- WAGHOLI,TAL- HAVELI, DIST- PUNE - 412207

WAI

1938. CHOWGULE INDUSTRIES PRIVATE LIMITED (--01), GAT NO. 407, A/P SHENDURJANE, MIDC ROAD, NEAR HOTEL GANDHARVA, OPP. DHOM LEFT CANAL, TAL – WAI, DISTT. SATARA - 412803
PH :8380080501.

WALUJ

1939. PAGARIYA AUTO PVT LTD (2103--03), E-16,WALUJ,AURANGABAD - 431001
PH :9860999466.

WARANANAGAR

1940. SAI SERVICE PRIVATE LIMITED (--01), GAT NO.:1122/A, KODOLI, TALUKA: PANHALA, DIST. KOLHAPUR - 416114
PH :9923204173.

WARDHA

1941. SEVA AUTOMOTIVE PVT LTD (2002--02), GOPURI CHOWK, ,OPP. BANK OF INDIA COLONY, NAGPUR ROAD, WARDHA - 442001
1942. SEVA AUTOMOTIVE PVT LTD (2002--05), PLOT NO. 177, WARDHA-NAGPUR HIGHWAY, AT. PAVNAR, TEHSIL – WARDHA, DIST.-WARDH, PIN-442111, MAHARASHTRA - 442111
PH :7720009444.

WARUD

1943. ASPA BANDSONS AUTO (P) LTD (--04), SURVEY NO. 50/3, SETURJANAGHAT ROAD, TALUKA: WARUD, DIST. AMRAWATI - 444906
PH :7248925687.

WASHIM

1944. ASPA BANDSONS AUTO (P) LTD (--02), NEAR RAILWAY CROSSING,HIGOLI ROAD,WASHIM, - 444505
1945. ASPA BANDSONS AUTO (P) LTD (--06), B-31, HINGOLI ROAD, MIDC-WASHIM, PIN-444505. - 444505

YAVATMAL

1946. HIMALAYA CARS (--01), OPPOSITE RAUT PETROL PUMP, DARWHA ROAD, YAVATMAL, MAHARASHTRA - 445001

YEOLA

1947. SEVA AUTOMOTIVE PVT LTD (--01), GAT NO. 65-A, PLOT NO. 41, AHMED NAGAR-MANMAD ROAD, NEAR TEHSIL OFFICE, YEOLA, TALUKA – YEOLA, DISTRICT – NASHIK, MAHARASHTARA. - 423401
PH :9130033944.

YEWAT

1948. MAHALAXMI AUTOMOTIVES PVT LTD (--01), SOLAPUR PUNE NATIONAL HIGHWAY, SAHAJAPUR, YEWAT, TALUKA: DAUND, DISTT: PUNE (MAHARASHTRA). - 412202
PH :8308818946.

MANIPUR

BISHNUPUR

1949. EASTERN MOTORS (--01), BISHNUPUR BAZAR, TIDIM ROAD, BISHNUPUR DISTT. MANIPUR. - 795126

CHANDEL

1950. EASTERN MOTORS (--01), KAKCHING LAMKHAI, AH1 (INDO BURMA ROAD), CHANDEL (MANIPUR) - 795103

IMPHAL

1951. EASTERN MOTORS (7401-74-01), CHINGMEIRONG EAST, IMPHAL, MANIPUR - 795001
PH :8415945626.
1952. EASTERN MOTORS (7401-74-02), NH,39, CHINGMEIRONG, WEST, IMPHAL. - 795010
PH :8415945626.
1953. SAMADON ENTERPRISE (--01), 82 GHARI MAKHA LEIKAI, IMPHAL WEST, MANIPUR. - 795140
PH :7005987123.

JIRIBAM

1954. EASTERN MOTORS (--01), AT HILGHAT, IMPHAL SILCHAR ROAD, JIRIBAM - 788104
PH :8415945626.

MAYANG

1955. EASTERN MOTORS (--01), MAYANG IMPHAL, THANA-AWANG, LEIKAI, OPPOSITE PRAVABATI COLLEGE, PIN-795132, MANIPUR - 795132

SENAPATI

1956. EASTERN MOTORS (--01), DIST.-COUNCIL (POULEA) VILLAGE, P.O. - SENAPATI, SENAPATI, MANIPUR. - 795106
PH :8415945626.

THOUBAL

1957. EASTERN MOTORS (--01), THOUBAL ATHOKPAM KHUNOU, NEAR D.C. OFFICE COMPLEX, THOUBAL, MANIPUR - 795138

UKHRUL

1958. SAMADON ENTERPRISE (--01), KAMPHASOM, UKHRUL, MANIPUR - 795142
PH :9774216305.

MEGHALAYA

BHAITBARI

1959. RANI MOTORS (--01), NEW BHAITBARI, WEST GARO HILLS, MEGHALAYA, (PATTA NO - 89 SONG - NEKEKONA, MOZUZA NO - VI- 3 LOT) - 794104

BHOIRYMBONG

1960. RANI MOTORS (--01), VILLAGE – UMROI MADAN, DISTRICT – RI BHOI, MEGHALAYA. - 793103
PH :9774478281.

JOWAI

1961. RANI MOTORS (--01), LADTHADLABHO, OPP. PWD OFFICE, JOWAI, DIST - JAINTIA HILLS, MEGHALAYA - 793150
PH :7085849525.

KHLIEHRIAT

1962. BANALARI WORLD CARS (8502--03), JOWAI-SICHAR ROAD, MEGHALAYA, KHLIEHRIAT - 793150

MAWKYRWAT

1963. RANI MOTORS (--01), DAK BANGLA, MAWKYRWAT, WEST KHASI HILLS, MEGALAYA - 793114
PH :9856005544.

MAWNGAP

1964. BANALARI WORLD CARS (--01), LAITPYNTER, SHILLONG NONGTION ROAD, MAWNGAP, DIST. -EAST KHASI HILLS, MEGHALAYA. - 793121

MOIRANG

1965. SAMADON ENTERPRISE (--01), MOIRANG LAISHANGBAM LEIKAI, PO AND PS: MOIRANG, DIST- BISHNUPUR, MANIPUR - 795133
PH :7005987122.

MYLLIEM

1966. BANALARI WORLD CARS (--01), MADANIING SYIEM, MYLLIEM, SHILLONG CHERRAPUNJI ROAD, DISTT: EAST KHASI HILLS, MEGHALAYA. - 793009

NONGPOH

1967. RANI MOTORS (8501--05), NEAR D.T.O. OFFICE, G.S. ROAD, NONGHPOH, RIBHOI DISTT. - 793102
PH :9774478281.

NONGSTOIN

1968. RANI MOTORS (8501--04), OPP.IRANI PETROL PUMP, NEW NONGSTEIN, DISTRICT-WEST KHASI HILLS ,MEGHALAYA - 793119
PH :9856005544.

PYNURSULA

1969. BANALARI WORLD CARS (--01), PHLANGSHLAIN MAIN ROAD, SHILONG DAWKI, PYNURSLA, DISTRICT - EAST KHASI HILLS, MEGHALAYA - 793110 - 793110
PH :8415942700.

SHILLONG

1970. RANI MOTORS (8501-85-01), SUNNY HILLS, GARIKHANA, G.S.ROAD, SHILLONG - 793014
PH :9862099400.
1971. RANI MOTORS (8501-85-02), MAWBLEI, NH-44, SHILLONG JOWAI ROAD, MEGHALAYA. - 793021
PH :8014734780.
1972. BANALARI WORLD CARS (8502-85-01), MAWLAI NONGKWAR, G.S. ROAD, SHILLONG - 793017

TURA

1973. RANI MOTORS (--01), AGILLANGRE, ARAIMILE, PO NEW TURA, TURA - 794101
PH :7005563791.

UMSAW

1974. BANALARI WORLD CARS (--01), UMSAWKHWAN RAID MAWBUH, MYLLIEM SYIEMSHIP, RI BHOI DISTRICT, MEGHALAYA. - 793123

MIZORAM

AIZWAL

1975. GIG MOTORS (9103-91-01), EDENTHAR, AIZAWL, MIZORAM. - 796001
PH :8974559065.

LUNGLEI

1976. GIG MOTORS (--01), RAMTHAR VILLAGE, LUNGLEI, DISTRICT-LUNGLEI, MIZORAM - 796701
PH :8974559065.

NAGALAND

DIMAPUR

1977. PROGRESSIVE MOTORS (3201--01), OPPOSITE AIRPORT, N.H.39, DIMAPUR KOHIMA ROAD, DIMAPUR - 797112
PH :7005254089.
1978. SEYIE AUTO (--02), 6TH MILE, NEAR ESAF BANK, CHUMOUKEDIMA, DIMAPUR, NAGALAND - 797112

KOHIMA

1979. SEIYE AUTO PRIVATE LIMITED (--01), TSIECIE, NH-29, PHEK ROAD, KOHIMA, NAGALAND - 797001

MOKOKCHUNG

1980. PROGRESSIVE MOTORS (--01), SUNGKONMEN ROAD, MOKOKCHUNG, NAGALAND. - 798601
PH :8787325534.

TUENSANG

1981. PROGRESSIVE MOTORS (--01), YUNPHANG , TUENSANG - 798612

TULI

1982. SEIYE AUTO PRIVATE LIMITED (--01), TULIYONGWARD TULI TOWN NEAR CO. OPERATIVE BANK - 798618

WOKHA

1983. PROGRESSIVE MOTORS (--01), NIROPEN COLONY, WOKHA-797111, NAGALAND - 797111
PH :9774070707.

ODISHA

ANANDAPUR

1984. JYOTE MOTORS PVT LTD (--01), KHATA NO. 246/407, PLOT NO. 76, P.S. – GHASIPURA, MOUZA – SUDUSUDIA, DISTRICT – KEONJHAR, ANANDPUR, ODISHA . - 758021

ANGUL

1985. ODYSSEY MOTORS PVT LTD (--01), AT/PO KULAD (NEAR NALCO CPP PLANT), KANDASAR, NALCO NAGAR, ANGUL (DISTT: ANGUL). - 759145

ATTABIRA

1986. APARNAA MOTORS (A UNIT OF APARNAA VAHAN PVT LTD) (--01), LADERPALLI MAIN ROAD,, ATTABIRA, DIST.BARGARH, - 768027

ATTAGARH

1987. TUSHI MOTORS PVT LTD (--01), KHATA NO 212/420,MOUZA :BIRAKISHOREPUR ATHAGARH, DISTRICT: CUTTACK - 754029
PH :7504890838.

BALASORE

1988. JYOTE MOTORS PVT LTD (--01), PLOT NO. 276, GANESHWARPUR-NH-5, POST-JANUGANJ VIA REMUNA, DIST.-BALASORE - 756019

BALIGUDA

1989. SKY AUTOMOBILES (--01), KHATA NO.-370/451, TEHSIL-K NUAGAN, GEGURPADAR, BALIGUDA, - 762103

BALUGOAN

1990. JYOTE MOTORS PVT LTD (--01), .M/S PLOT NO 758/31,KHATA NO 350/30,MOUZA-GOBARDHANPUR,BALUGAON, DISTRICT-KHORDA,ODISHA-752030 - 752030
PH :9776615001.

BAMRA

1991. ODYSSEY MOTORS PVT LTD (--01), M/S ODYSSEY MOTORS,NEAR SATSANG KENDRA, DUMERMUNDA COLLEGE ROAD, BAMRA,GOVINDPUR-768221. - 768221
PH :9439314464.

BANEI

1992. ORBIT MOTORS PVT LTD (--01), PLOT NO -1683/2508,BBABUNUAGAON,KHATA NO-177/66,UPARGADA-98,ODISHA - 770038

BARBIL

1993. JYOTE MOTORS PVT LTD (--01), PLOT NO. 507,SUNDARA , UNIT NO. 13,P.S. BARBIL, ODISHA - 758035

BARGARH

1994. ODYSSEY MOTORS PVT LTD (--04), AT/PO -BARGARH, NH-6, DISTT.-BARGARH, ORISSA - 768028
PH :8908944206.

BARIPADA

1995. JYOTE MOTORS PVT LTD (--02), PLOT NO. 90/523/904, SWARUP VILLA, NH-5, BARIPADA - 757001

BELPAHAR

1996. APARNAA MOTORS (A UNIT OF APARNAA VAHAN PVT LTD) (--01), NH 49,, MAHIMA CHOWK, - 768217

BERHAMPUR

1997. SKY AUTOMOBILES (--01), PLOT NO.80/1191 DHARMA NAGAR, MAIN ROAD, BERHAMPUR - 760002
1998. SKY AUTOMOBILES (--02), PLOT NO. 876, WESTERN ROW NH-5, KONISI HATO, VILLAGE – KONISI, BERHAMPORE, GANJAM, ODISHA. - 761008

BHADRAK

1999. JYOTE MOTORS PVT LTD (--01), PLOT NO. 14/4837, KHATA NO. 1345/1087, TRISHALPUR, CHARMPA, BHADRAK , ODISHA - 756101

BHAWANIPATNA

2000. LEGEND CARS PRIVATE LIMITED (--02), NH-201, KESINGA ROAD, BHAWANIPATNA - 766001

BHUBANESHWAR

2001. NARAYANI MOTORS PVT LTD (--01), 217, CUTTACK ROAD, JHARPARA, BHUBANESWAR - 751006
2002. JYOTE MOTORS PVT LTD (--01), A-62, NAYAPALLI,NEAR CRPF SQUARE, BHUBANESWAR - 751003
2003. SKY AUTOMOBILES (--01), PLOT NO.-435/1866, NEAR KIIT SQUARE PATIA, BHUBNESHWAR, - 751022
2004. NARAYANI MOTORS PVT LTD (--02), PLOT NO 56 AND 57,RASULGARH, BHUBANESHWAR, ODISHA - 751010
2005. JYOTE MOTORS PVT LTD (--04), PLOT NO. 22 & 23, SECTOR-A, ZONE-D, MANCHESWAR INDUSTRIAL ESTATE AREA, BHUBANESHWAR. - 751010
2006. SKY AUTOMOBILES (--02), KHATA NO. 457/675, PLOT NO. 543, 756, 789 AND 546, SRIVIHAR, INFRONT OF IOCL OFFICE, P.S. -CHADRASHEKARPUR, BHUBANESHWAR, ODISHA. - 751024
2007. JYOTE MOTORS PVT LTD (--01), A/62, NAYAPALLI,NH-5,BHUBANESHWAR,ORISSA-751 003 - 751003
2008. NARAYANI MOTORS PVT LTD (--03), KHATA NO-652,PLOT NO 4493, MAUZA PANDRA THANA-RASULGARH,BHUABNESHWAR - 751025
2009. JYOTE MOTORS PVT LTD (--05), PLOT NO. 219/1088, AT-BADADHANPUR, PO-SISHUPALGARH, PURI BYPASS ROAD, BHUBANESWAR, KHURDHA - 751002

BOLANGIR

2010. ODYSSEY MOTORS PVT LTD (--03), NH-201, MADHIAPALI, SAMBHALPUR ROAD, BOLANGIR, ORISSA - 767001
PH :8895418122.

BOUDH

2011. ODYSSEY MOTORS PVT LTD (--01), BOLANGIR MAIN ROAD,BIJU PATNAIK CHOWK, NEAR SARASWATI PETROL PUMP,BOUDH - 762014

CHANDIKHOLE

2012. SKY AUTOMOBILES (--01), PLOT NO.285/3, SHANTI MANDAP MOUZA -SUNGUDA, TEHSIL-DARPANI, PO CHANDIKHOL, DIST. -JAJPUR, ODISHA, - 755044

CUTTACK

2013. SKY AUTOMOBILES (6701-67-02), BHANPUR, NH-5, CUTTACK - 753011
2014. TUSHI MOTORS PVT LTD (6702--01), PLOT NO. C-14, PLOT NO.C-13 ,INDUSTRIAL ESTATE ,KHAPURIA,TAHASIL - CUTTACK SADAR ,CUTTACK DISTRICT,BHUBANESWAR - 753001
PH :9692912345.
2015. SKY AUTOMOBILES (6701-67-07), LAXMINAGAR BIDANASI - 753014

DEOGARH

2016. ORBIT MOTORS PVT LTD (--01), KHATA NO. 270, OI MOUZA, DEOGARH, ODISHA - 768108

DHENKENAL

2017. SKY AUTOMOBILES (6701--04), PLOT NO-136/1103, KATHAGARA , NEARASSAM OIL, NH-42, DHENKANAL. - 759001

DUNGURIPALI

2018. APARNAA MOTORS (A UNIT OF APARNAA VAHAN PVT LTD) (--01), NH-26, BARGARH-BOLANGIR HIGHWAY, , DUNGURIPALI, DIST.SONEPUR, ODISHA - 767023

GANDAI

2019. SPARSH AUTOMOBILES PVT LTD (--01), M/S SPARSH AUTOMOBILES ,WARD NO – 7, NEAR KRISHI UPAJ MANDI,
GANDAI RAJNANDGAON ROAD,GANDAI – 491888 - 491888
PH :9926626662.

JAGATSINGHPUR

2020. NARAYANI MOTORS PVT LTD (--01), KHATTA NO. 827/221 & 827/222, PLOT NO. 1197 & 1199/3065, MOUZA-MARKHANDPUR, PO PUNABGA, DISTT. JAGATSINGHPUR, ODISHA - 754103

JAJPUR

2021. SKY AUTOMOBILES (6701--05), P.O JAHNA, P.S KORAI, KEONJHAR ROAD, JAJPUR, ORRISSA - 7553019

JALESWAR

2022. JYOTE MOTORS PVT LTD (--01), KHATA NO. 422/744, PLOT NO. 2304 AT P.O. - NAYABAZAR, JALESWAR, DIST.- BALASORE, ODISHA. - 756032

JEYPORE

2023. LEGEND CARS PRIVATE LIMITED (--03), SOURAGUDA,JEYPORE,DISTT-KORAPUT,ORISSA,INDIA - 764001

JHARSUGUDA

2024. ODYSSEY MOTORS PVT LTD (--01), KHATA NO. 466/502, PLOT NO. 966, JHARSUGUDA TOWN, UNIT NO. 7, SARBAHAL P.S. JHARSUGUDA, ORISSA - 768201

KAMAKHYANAGAR

2025. SKY AUTOMOBILES (--01), ALUTAMA, KAMAKHYANAGAR, DHENKANAL ODISHA - 759018

KANTABANJHI

2026. ODYSSEY MOTORS PVT LTD (--01), SH-42, UDING, KANTABANJHI, ODISHA-767039 - 767039

KARANJIA

2027. JYOTE MOTORS PVT LTD (--01), KARANJIAGOLEI,, KARANJIA,MAYURBHANJ, - 757037

KENDRAPARA

2028. JYOTE MOTORS PVT LTD (--01), M/S JYOTE MOTORS, KHATA NO: 351/85, PLOT NUMBER 633, MOUZA-ALBANKA, KENDRAPARA, ODISHA. - 754208
PH :9776615001.

KEONJHAR

2029. JYOTE MOTORS PVT LTD (--01), NH 215, DHRUPADA, BARBIL ROAD, KEONJHAR. - 758001

KUCHINDA

2030. ODYSSEY MOTORS PVT LTD (--01), /S ODYSSEY MOTORS ,PLOT NO 146,KHATA NO 76/9,MOUZA-KUNDAPOSHI,NEAR KUNDESHWAR
MANDIR,KUCHINDA,SAMBULPUR. - 768222
PH :9439314464.

NABRANGPUR

2031. LEGEND CARS PRIVATE LIMITED (--01), KHATA NO 204/155, PLOT NO 202, DHARNABDA MOUZA, NABRANGPUR ODISHA - 764059

NAYAGARH

2032. JYOTE MOTORS PVT LTD (--02), PLOT NO. 1319/3750, KHANDAPADA, NAYAGARH - 752069

NETAJI NAGAR,CUTTACK

2033. TUSHI MOTORS PVT LTD (--02), PLOT NO-819/1021, MOUZA-UNIT 39,, NETAJI NAGAR - 753014

NIMPARA

2034. NARAYANI MOTORS PVT LTD (--01), PLOT NO. 345/1344, GANESH BAZAR, NIMAPARA, DISTRICT – PURI, ODISHA. - 752106

NIRGUNDI

2035. NARAYANI MOTORS PVT LTD (--04), KHATA NO 251/255, PLOT NO 233,MALGOWDINI-MOUZA BLITERUA, NIRGUNDI,DISTRICT-CUTTACK, ORISSA. - 754025

PADAMPUR

2036. ODYSSEY MOTORS PVT LTD (--01), M/S ODYSSEY MOTORS, CHARPALLI,PADAMPUR, NEAR REGENCY HOTEL,DISTRICT:BARGARH, ORISSA - 770039
PH :9439314464.

PALLAHARA

2037. ODYSSEY MOTORS PVT LTD (--01), KHATA NO. 260, PLOT NO. 998/3720, PAHALLARA, ODISHA. - 759119

PANCHGAON

2038. ODYSSEY MOTORS PVT LTD (--01), KHATA 66/136 BEARING PLOT NO .565/980 (4 SHOPS) KISAM -GHARABARI,MOUZA PANCHGOAN ,TAHSIL -LAKHANPUR ,DIST-JHARSUGUDA, ODISHA - 768226

PANIKOILI

2039. TUSHI MOTORS PVT LTD (--01), PLOT NO. 3211/3776, AT-SOTI, PO-PANIKOILI - 755043

PARADEEP

2040. NARAYANI MOTORS PVT LTD (--01), PLOT NO. 1438, UDAYA VIHAR, NEAR DO CHOWKI SQUARE, PARADEEP, ODISHA. - 754141

PARLAKHEMUNDI

2041. SKY AUTOMOBILES (--01), PLOT NO. 273, KHATA NO. 78, WARD NO. 1, PARLAKHEMUNDI, GAJAPATI, ORISSA. - 761211
PH :9776999977.

PHULBANI

2042. SKY AUTOMOBILES (--01), PLOT NO. 54/533, GUDRISAHI, KHAJURIAPADA,DISTRICT – KANDHAMAL ODISHA. PIN CODE: 762001 - 762001
PH :9776900333.

PURI

2043. NARAYANI MOTORS PVT LTD (--01), PLOT NO.1797/2449, KHATA NO.187A/32, AT. BATAMANGLA,PO HAREKRISHNAPUR, BATAGAON, PURI, ODHISA - 752002

RAIRANGPUR

2044. JYOTE MOTORS PVT LTD (--01), PLOT NO.1077/2466, PURNAGHATI, RAIRANGPUR, DISTT: MAYURBHANJ, ODISHA - 757046

RAYAGADA

2045. LEGEND CARS PRIVATE LIMITED (--01), M/S LEGEND CARS, JK PUR ROAD, KOMTALPETA, NEAR ENFIELD SHOWROOM, RAYAGADDA, ODISHA - 765001 PH :7008771180.

ROURKELA

2046. ORBIT MOTORS PVT LTD (8701-87-01), VEDVYAS, NEAR PAAHADI BAR, ROURKELA,ORRISA - 769041

SAMBHALPUR

2047. ODYSSEY MOTORS PVT LTD (--01), AINTHAPALI, SAMBALPUR, ORISSA - 768004 PH :7381083571.

2048. APARNAA MOTORS (A UNIT OF APARNAA VAHAN PVT LTD) (--01), PLOT NO 969/4497,PANCHGACHIA SAMBALPUR - 768019 PH :8260966698.

2049. ODYSSEY MOTORS PVT LTD (--05), ODYSSEY MOTORS, AINTHAPALI, SAMBHALPUR

SEMILIGUDA

2050. LEGEND CARS PRIVATE LIMITED (--01), 1231/2076,KHATA NO 113/1503, MOUZA:LUNGURI,SEMILIGUDA. - 764036

SOHELA

2051. ODYSSEY MOTORS PVT LTD (--01), KHATA NO 325/892, PLOT NO 396.7579, KISAM-GHARABARI, MOUZA-SOHELA, DIST-BARGARH, ODISHA - 768033

SORO

2052. JYOTE MOTORS PVT LTD (--01), PLOT NO 15/1269,KHATA NO 442, SORO, BALASORE, ODISHA STATE. - 756045 PH :9776615001.

SUBARNAPUR

2053. ODYSSEY MOTORS PVT LTD (--01), KHATA NO. 32, MOUZA – SANJHINIK, SONEPUR (ALSO KNOWN AS SUBARNAPUR), DISTRICT – SUBARNPUR, ODISHA - 767017

SUNDERGARH

2054. ORBIT MOTORS PVT LTD (--01), M/S ORBIT MOTORS, AT - PATRAPALI, PO SUNDERGARH, BY PASS ROAD, NEAR BJP OFFICE, SUNDERGARH - 770001 PH :8249354447.

TANGI

2055. SKY AUTOMOBILES (--01), KHATA NO 731/18, PLOT NO,107,CHAMPAGARH NH 5,TANGI, DISTRICT – KHORDHA, - 752023 PH :9776900333.

TIRTOL

2056. NARAYANI MOTORS PVT LTD (--01), TIRTOL ,JADATIRA - 754137

TITLAGARH

2057. ODYSSEY MOTORS PVT LTD (--01), M/S PLOT NO 687/1216, MOUZA PIPALPADAR. TITLAGARH,BALANGIR, ODISHA - 767033 PH :9439314464.

UDALA

2058. JYOTE MOTORS PVT LTD (--01), MOUZA - UDALA, TOWN UNIT NO. 7, NAGBANI, TEHSIL NO. 325, THANA NO. 110, DIST.-MAYURBHANJ, ODISHA. - 757041 PH :8249877935.

PUDUCHERRY

KARAIKAL

2059. SHENBAKA CARS PVT LTD (--01), R. S. NO. 173/3PT, T. S. NO. 9/5, WARD, L-BLOCK, NO. 3, KARAIKAL NAGORE MAIN ROAD, VILLAGE - ODUTHURAI REVENUE, NERAVY COMMUNE, KARAIKAL MUNICIPALITY, KARAIKAL. - 609602

2060. SHENBAKA CARS PVT LTD (--02), SURVEY NO # RS.NO:252, DOOR NO:192, VARICHIKKUDY VILLAGE, PORAYAR SALAI,KARAIKAL, PONDICHERY-609 609 - 609609

MADAGADIPET

2061. SHENBAKA CARS PVT LTD (--01), SURVEY NO. 129/4/A/2, MADAGADIPET REVENUE VILLAGE, MADAGADIPET, PONDICHERRY - 605107 PH :8220046178.

PONDICHERRY

2062. SHENBAKA CARS PVT LTD (9601-96-01), 133/1A, MOOLAKULAM, VILLUPURAM MAIN ROAD, PONDICHERRY - 605010

PUNJAB

ABOHAR

2063. TARA AUTOMOBILES (--01), SHREE GURU JAMBHESHWAR CHOWK, MALOUT SHREE GANGA NAGAR BYPASS, ABOHAR, PUNJAB - 152116 PH :9876047847.

ADAMPUR

2064. LOVELY AUTOS (--01), KHASRA NO.10/7/1, JALANDHAR-HOSHIARPUR HIGHWAY, ADAMPUR DISTT. JALANDHAR - 144102

AJNALA

2065. SWANI MOTORS PVT LTD (--01), KHASRA NO. 71, AJNALA-AMRITSAR ROAD, VILLAGE - BHARKA TARA SINGH, TEHSIL - AJNALA, DISTRICT - AMRITSAR, PUNJAB. - 143102 PH :8872001731.

AMRITSAR

2066. SWANI MOTORS PVT LTD (1701-17-01), 81,COURT ROAD, AMRITSAR - 143001

2067. JAYCEE MOTORS PVT LTD (1704-17-01), 274 EAST MOHAN NAGAR, G.T.ROAD, AMRITSAR - 143006 PH :9780038335.

2068. RISHABH FOURWHEELS PVT LTD (1703-17-01), ADARSH SOAP COMPLEX, BATALA ROAD, AMRITSAR - 143004 PH :9914841577.

ANANADPUR SAHIB

2069. CM AUTO SALES PVT LTD (--01), VILLAGE MIYANPUR, NAINA DEVI ROAD, ANANDPUR SAHIB,TEHSIL ANANDPUR SAHIB, DISTT. ROPAR,PUNJAB - 140123 PH :9915022897.

APRA

2070. LOVELY AUTOS (--01), SAMRAI CHOWK PHILLAUR ROAD, VILLAGE - APRA, TEHSIL - PHILLAUR, DIST.-JALANDHAR, STATE - PUNJAB. - 144416 PH :9915020515.

AUR

2071. LOVELY AUTOS (--01), KHATUNI NO. 479/588, KHASRA NO. 27/20/04(2-18), 21/2(2-10), VILLAGE - AUR, TEHSIL - NAWASHAR, DIST.-SBS NAGAR, STATE - PUNJAB. - 144417 PH :9915020510.

BAGHA PURANA

2072. REMIRA MOTORS PVT LTD (--01), BUILDING NO.68, OPP. SHINA ENCLAVE, MOGA ROAD, BAGHA PURANA, DISTT. MOGA, PIN-142038 - 142038 PH :7087025009.

BALACHAUR

2073. LOVELY AUTOS (--01), NEAR MCDONALD – GHUGGI JUNCTION), VPO-GARHI KANUGO, NAWANSHAHR CHANDIGARH HIGHWAY, CHANDIGARH ROAD, BALACHAUR, DISTRICT-S.B.S NAGAR, PUNJAB (NAWANSHAHR) - 144521

BALBEHRA

2074. DIVINE AUTOWORLD LLP (--01), NEAR HDFC BANK LTD., SAMANA ROAD, BALBEHRA - 147101 PH :9888341118.

BANGA

2075. LOVELY AUTOS (3503--03), NAWASEHAR-JALANDHAR ROAD, BANGA - 144505 PH :9915028625.

BANUR

2076. TRICITY AUTOS (--01), SANDHU MARKET NEAR SALES TAX BARRIER, BANUR RAJPURA HIGHWAY, BANUR, PUNJAB - 140601 PH :9988882330.

BARNALA

2077. MAX AUTOMOBILES (--01), NR. HANDIYAN CHOWK,MANSA BYE PASS,BARNALA,PUNJAB - 151001

BATALA

2078. PATHANKOT VEHICLEADES PVT LTD (--05), NEAR VMS INSTITUTE, SAID MUBARAK, GT ROAD, BATALA - 143505

BEGOWAL

2079. MARWAHA AUTOS (A UNIT OF INDERJIT MARWAHA AUTOS PRIVATE LIMITED) (--01), PELIA TOWN, BHADAS ROAD, WARD NO. 11, JALANDHAR ROAD, VPO. BEGOWAL, KAPURTHALA, PIN-144621, PUNJAB - 144621 PH :9779166004.

BHADSON

2080. HIRA AUTOMOBILES LTD (--01), VILLAGE CHASWAL, NABHA ROAD, BHADSON - 147202

BHAGTA BHAI KA

2081. TARA AUTOMOBILES (--01), NEAR SARPANCH HOUSE, BHAGTA BHAI KA, DISTRICT – BHATINDA. - 151206 PH :8437030666.

BHATINDA

2082. TARA AUTOMOBILES (7002-70-01), MANSA ROAD, OPP. I.T.I, BATHINDA - 151001

BHIKHIWIND

2083. RISHABH FOURWHEELS PVT LTD (--01), KHASRA NO. 67/3/2, 4/1, 7/2, 8/1, 8/2, PIND BHIKHIWIND, TEHSIL – PATTI, DISTRICT – TARN TARAN, PUNJAB. - 143303 PH :9914708577.

BHOGPUR

2084. LOVELY AUTOS (--01), KHASRA NO. 31/114, 17/2 18/2 23, MAIN JALANDHAR-PATHANKOT HIGHWAY,OPP- AJIT PALACE, BHOGPUR - 144201

BHULATH

2085. LOVELY AUTOS (--01), WARD NO. 1, NADALA-BEGOWAL ROAD, VPO BHULATH, DISTRICT – KAPURTHALA, PUNJAB.

BILGA

2086. LOVELY AUTOS (--01), VPO BILGA, NEAR GOVT. PRIMARY SCHOOL, TEHSIL PHILLAUR, JALANDHAR. - 144036
PH :9815069814.

CHUNNI KALAN

2087. HOSHIARPUR AUTOMOBILES (--01), NEAR RAJINDER MOTORS, SIRHIND-CHANDIGARH ROAD, VILLAGE CHUNNI, DIST. FATEHGARH SAHIB. - 140307

DASUA

2088. HOSHIARPUR AUTOMOBILES (--04), OPP CHEEMA PETROL PUMP, G.T. ROAD, DASUYA - 144205

DERABASSI

2089. AUTOPACE NETWORK PVT LTD (--02), AT NH-2, NEAR DERABASSI, TOLL BARRIER-DERABASSI - 140507

DEVIGARH

2090. HIRA AUTOMOBILES LTD (--01), CHANNA MOUR, PEHOWA PATIALA ROAD, DEVIGARH, DISTT. PATIALA (PUNJAB). - 147111

DHARAMKOT

2091. REMIRA MOTORS PVT LTD (--01), JOSAN MARKET, DHARAMKOT, MOGA - 142042

DHILWAN

2092. MARWAHA AUTOS (A UNIT OF INDERJIT MARWAHA AUTOS PRIVATE LIMITED) (--01), MIANI BAKARPUR,AMRITSAR ROAD, OPP-INDIAN OIL PETROL PUMP, DHILWAN DISTT KAPURTHALA - 144804
PH :9779166004.

DORAHA

2093. GULZAR MOTORS PVT LTD (--01), G.T. ROAD, NEAR ARRICHAN CHOWK, DORAHA, DISTT. LUDHIANA, PUNJAB. - 141421
PH :9814191122.

FARIDKOT

2094. MAPSKO AUTO INDIA PVT LTD (--01), FARIDKOT- KOTKAPURA ROAD, FARIDKOT, PUNJAB - 151204

FATEHGARH CHURIAN

2095. PATHANKOT VEHICLEADES PVT LTD (--01), KHASRA NO. 17 R, DERABABA NANAK ROAD, FATEHGARH CHURIAN, TEHSIL - BATALA, DIST. -GURDASPUR, STATE - PUNJAB. - 143602

FAZILKA

2096. TARA AUTOMOBILES (--03), NH-10, NEAR SARVHITKARI BAL VIDYA MANDIR, FAZILKA - 152116
PH :9876047847.

FEROZPUR

2097. PLUTON DREAMWORKS PRIVATE LIMITED (--01), MOGA ROAD, NEAR HARYALI PETROL PUMP FEROZPUR PUNJAB - 152001

GARHSHANKAR

2098. HOSHIARPUR AUTOMOBILES (--02), OPP. COURT, CHANDIGARH ROAD, GARHSHANKAR, DIST. HOSHIARPUR - 144527

GHANAUR

2099. DIVINE AUTOWORLD LLP (--01), WARD NO. 1, OPPOSITE OLD PETROL PUMP GHANAUR PATIALA ROAD, SUB TEHSIL - GHANAUR, TEHSIL - RAJPURA, DIST.-PATIALA, STATE - PUNJAB. - 140401
PH :9217048437.

GHAROTA

2100. PATHANKOT VEHICLEADES PVT LTD (--01), VILLAGE AND PO GHAROTA, OPPOSITE PUNJAB GRAMIN BANK, TEHSIL & DISTT. PATHANKOT – 143533. - 143533
PH :8264105000.

GHOMAN

2101. PATHANKOT VEHICLEADES PVT LTD (--01), KHEWAT NO. 36, KHATAUNI NO. 122, KHASRA NO. 11//25 (7-18), VILLAGE - BALRAMPUR ADDA, KHASBA - GHOMAN. - 143514
PH :8054500130.

GORAYA

2102. LOVELY AUTOS (--01), NEAR MILAN PALACE, G.T. ROAD, GORAYA. - 144409
PH :9417804049.

GURDASPUR

2103. PATHANKOT VEHICLEADES PVT LTD (--03), V.P.O. BABRI NH-15, DIST. GURDASPUR - 143521
2104. PATHANKOT VEHICLEADES PVT LTD (--06), VPO - JEEWANWAL BABRI, NH-15, GURDASPUR (PUNJAB) - 143521
PH :9417900870.

HOSHIARPUR

2105. HOSHIARPUR AUTOMOBILES (--01), SINGRIWALA, JALLANDHAR ROAD, HOSHIARPUR, - 146001

JAGRAON

2106. SANDHU AUTOMOBILES PVT LTD (6206--05), NATIONAL HIGHWAY-64, JAGRAON - 142026
PH :8437025969.

JAITU

2107. MAPSKO AUTO INDIA PVT LTD (--01), NEAR CANAL, BATHINDA ROAD, JAITO, DISTRICT – FARIDKOT. - 151202
PH :7347000520.

JALALABAD-PB

2108. TARA AUTOMOBILES (--02), F.F. ROAD, NEAR THANA SADAR, JALALABAD - 152024
PH :9876047847.

JALLANDHAR

2109. LOVELY AUTOS (3503-35-01), DR. AMBEDKAR CHOWK, JALANDHAR CITY - 144001
PH :9915020515.
2110. MARWAHA AUTOS (A UNIT OF INDERJIT MARWAHA AUTOS PRIVATE LIMITED) (3506-35-01), OPP DPS SCHOOL, G.T. ROAD, JALANDHAR - 144010
PH :9779166004.
2111. LOVELY AUTOS (-35-01), KHASRA NO. 24/20/4, B D ENCLAVE, VILLAGE - JALANDHAR, DIST. -JALANDHAR, PUNJAB. - 144001

JANDIALA GURU

2112. BABA AUTOS (--01), GT ROAD, NEAR TARN TARAN BYE PASS, JANDIALA GURU - 143115

JANDIALA MANJKI

2113. LOVELY AUTOS (--01), SANT MARKET, JANDIALA-BUNDALA ROAD, VILLAGE – JANDIALA MANJKI, TEHSIL – NOORMAHAL, DISTRICT – JALANDHAR, PUNJAB. - 144033
PH :7087439797.

JHANJERI

2114. AUTOPACE NETWORK PVT LTD (--01), STATE HIGHWAY 12A, JHANJERI,, SAHIBZADA AJIT SINGH NAGAR, - 140307

KAHNUWAN

2115. PATHANKOT VEHICLEADES PVT LTD (--01), KHASRA NO.606, VPO-KAHNUWAN, THE. & DISTT. GURDASPUR. - 143528
PH :8288993301.

KALA SANGHIAN

2116. MARWAHA AUTOS (A UNIT OF INDERJIT MARWAHA AUTOS PRIVATE LIMITED) (--01), MAIN CHOWK, KALA SANGHIAN, DISTRICT KAPURTHALA, PUNJAB - 144623
PH :9779166004.

KALANAUR

2117. PATHANKOT VEHICLEADES PVT LTD (--01), KALANAUR-GURDASPUR ROAD, VILLAGE KALANAUR, TEHSIL AND DISTRICT GURDASPUR, PUNJAB - 143512
PH :9417900879.

KAPURTHALA

2118. MARWAHA AUTOS (A UNIT OF INDERJIT MARWAHA AUTOS PRIVATE LIMITED) (--01), SIDHU COMPLEX, CIRCLE ROAD - KAPURTHALA, PUNJAB - 144602
PH :9779166004.

KATHU NANGAL

2119. JAYCEE MOTORS PVT LTD (--01), KHASRA NO.12/20/2, 21/1 KHATA NO.212/186/229 GILL KHETI STORE, GT ROAD, VILLAGE-KATHUNANGAL, DISTT. AMRITSAR, PUNJAB - 143502

KHANNA

2120. HOSHIARPUR AUTOMOBILES (--01), VILLAGE-KAUNI, NEAR GILL PETROL PUMP, GT ROAD, KHANNA, DIST.-LUDHIANA, PUNJAB. - 141401
PH :9888716261.

KHARAR

2121. CM AUTO SALES PVT LTD (--03), NH-95, MORINDA ROAD,KHANPUR, KHARAR. DIST. MOHALI - 140301
PH :9915022878.

KOTKAPURA

2122. MAPSKO AUTO INDIA PVT LTD (--01), MOGA ROAD, NEAR GREEN DHABA OPPOSITE FUN PLAZA, KOTKAPURA, DISTRICT – FARIDKOT - 151204
PH :7347000518.

LALRU

2123. AUTOPACE NETWORK PVT LTD (--01), VILLAGE – LALRU, DERA BASSI, SAS NAGAR MOHALI, PUNJAB. - 140501
PH :9815011669.

LUDHIANA

2124. GULZAR MOTORS PVT LTD (6204--01), G.T.ROAD, DHOLEWAL, OPP. MILITARY CARMP, LUDHIANA - 141003
PH :9814160099.
2125. SANDHU AUTOMOBILES PVT LTD (6206--01), DHOLEWAL CHOWK, LINK ROAD, LUDHIANA - 141203
PH :9815600095.
2126. LOVELY AUTOS (6209--01), BABA NAND SINGH NAGAR, NEAR AYALLI CHOWK, FEROZEPUR ROAD, LUDHIANA – 141001 - 141001
2127. LOVELY AUTOS (-62-02), GILL ROAD, NEAR CANAL BRIDGE, LUDHIANA, PUNJAB
2128. LOVELY AUTOS (6209--03), OPPOSITE BHAI BALA SAHIB GURUDWARA, VILLAGE DAD, PAKHOWAL ROAD, LUDHIANA, PIN-141001, PUNJAB - 141001
PH :9815069814.
2129. LOVELY AUTOS (6209-62-04), EURO MART COMPLEX, HAMBRAN ROAD, NEAR RADHA SWAMI SATSANG BHAWAN - 141008
PH :9815069814.
2130. MARWAHA AUTOS (A UNIT OF INDERJIT MARWAHA AUTOS PRIVATE LIMITED) (6210-62-01), GT ROAD, OPPOSITE GOYAL HYUNDAI, VILLAGE DHANDHARI KHURD, LUDHIANA, DISTRICT – LUDHIANA, PUNJAB - 141010
PH :8054399990.

2131. MARWAHA AUTOS (A UNIT OF INDERJIT MARWAHA AUTOS PRIVATE LIMITED) (6210-62-02), OPP SBI BANK , JAMALPUR, CHANDIGARH ROAD, LUDHIANA - 141010
2132. LOVELY AUTOS (6211-62-01), 2716/1, GURDEV NAGAR, NEAR FEROZ GANDHI MARKET, LUDHIANA, PUNJAB - 141001

MACHIWARA

2133. HOSHIARPUR AUTOMOBILES (--01), SAMRALA ROAD, MACHIWARA, NEAR SHEEVA MARRIAGE PALACE - 141115
PH :9875900147.

MAHILPUR

2134. HOSHIARPUR AUTOMOBILES (--05), NEAR NEW BUS STAND, CHANDIGARH ROAD, MAHILPUR, DIST. HOSHIARPUR - 146105
PH :9914720424.

MALERKOTLA

2135. MAX AUTOMOBILES (--01), MALERKOTLA-LUDHIANA MAIN ROAD, VILLAGE - BHOGIWAL, MALERKOTLA, DIST.-SANGRUR, PUNJAB. - 148023

MANDI GOBINDGARH

2136. HOSHIARPUR AUTOMOBILES (--01), PLOT GOYAL MOTORS, NEAR YES BANK, MANDI SIRHIND ROAD, NH-1, MANDIGOBINDGARH, PUNJAB. - 147301

MANSA

2137. TARA AUTOMOBILES (7002--02), BALATA ROAD, NEAR ARVIND NAGAR, MANSA , PUNJAB - 151505

MOGA

2138. REMIRA MOTORS PVT LTD (--01), INDUSTRIAL AREA, OPPOSITE ITI, GT ROAD, MOGA. - 142001
PH :7087025402.

MOHALI

2139. NAVDESH AUTOS LLP (--01), PLOT NO.C-89, INDUSTRIAL AREA, PHASE-7, MOHALI - 160059
PH :8872016453.
2140. CM AUTO SALES PVT LTD (--03), PLOT NO. B-64, INDUSTRIAL AREA PHASE-7, MOHALI – PUNJAB - 140110

MOONAK

2141. MAPSKO AUTO INDIA PVT LTD (--01), PATRAN ROAD, MOONAK, PUNJAB - 148028

MORINDA

2142. CM AUTO SALES PVT LTD (--01), KHASRA NO. 1092, CHANDIGARH-SAMRALA ROAD, MORINDA, DIST.-ROPAR, PUNJAB. - 140101
PH :9915022811.

MUKERIAN

2143. HOSHIARPUR AUTOMOBILES (--01), VILL. TALWANDI KALAN, GT ROAD, MUKERIAN - 144211

MUKTSAR

2144. PLUTON DREAMWORKS PRIVATE LIMITED (--01), NEAR SSP OFFICE, BATHINDA ROADSRI MUKTSAR SAHIB - 152026

MULLANPUR

2145. SANDHU AUTOMOBILES PVT LTD (--01), OPPOSITE DHAKA ROAD, FEROZEPUR ROAD, MULLANPUR - 141101

MULLANPUR GARIBDASS

2146. NAVDESH AUTOS LLP (--01), H.NO. 341, POST OFFICE - MULLAPUR GARIBDASS, TEHSIL - MAJRI, DIST.-SAS NAGAR, STATE - PUNJAB. - 140901
PH :8872004676.

NABHA

2147. HIRA AUTOMOBILES LTD (6302--06), RADHA SWAMI ROAD, NABHA - 147201

NAKODAR

2148. LOVELY AUTOS (3503--04), JALANDHAR ROAD, NEAR MALARI GATE, NAKODAR - 144040

NANGAL

2149. CM AUTO SALES PVT LTD (--02), PLOT#36,AJOLI MOR, FOCAL POINT INDUSTRIAL AREA, NAPA NANGAL ,PUNJAB - 140126
PH :9592916811.

NAWANSHAHR

2150. LOVELY AUTOS (3503--02), NAWANSHAHR CHANDIGARH ROAD, VILL- LANGROHA, DISTT:- NAWANSHAHR, PUNJAB - 144514
PH :9915028682.

NIHAL SINGH WALA

2151. REMIRA MOTORS PVT LTD (--01), BARNALA ROAD, NEAR DEAR BABA SEWA DASS, TEHSIL-NIHALSINGHWALA, DIST.-MOGA. - 142055
PH :7067025009.

PATHANKOT

2152. PATHANKOT VEHICLEADES PVT LTD (--01), NEAR MAMOON CHOWK, DALHOUSIE ROAD, PATHANKOT, - 145001
2153. PATHANKOT VEHICLEADES PVT LTD (--04), NEAR A. B. COLLEGE, PATAHANKOT - 145001
2154. PATHANKOT VEHICLEADES PVT LTD (--07), PLOT NO. 58-C, 59-C, INDUSTRIAL GROWTH CENTRE, VILLAGE- CHACHELI, TEHSIL & DIST - 145001

PATIALA

2155. HIRA AUTOMOBILES LTD (6302-63-01), 13-B, FACTORY AREA, PATIALA - 147001
2156. HIRA AUTOMOBILES LTD (6302-63-04), C-20 & C-45, FOCAL POINT, PATIALA, PUNJAB - 147001
2157. HIRA AUTOMOBILES LTD (6302-63-07), D-1A, INDUSTRIAL FOCAL POINT, PATIALA (PUNJAB). - 147001
2158. DIVINE AUTOWORLD LLP (-63-02), BHARAT NAGAR,PATIALA-NABHA ROAD, PATIALA - 147001
2159. EAKANSH WHEELS PVT LTD (6305-63-01), KHASRA NO. 11/13/1, RAJPURA ROAD, PATIALA, 147001, PUNJAB - 147001

PATRAN

2160. HIRA AUTOMOBILES LTD (6302--02), NARWANA ROAD, PATRAN, PUNJAB, - 147105

PATTI

2161. JAYCEE MOTORS PVT LTD (--01), KHASRA NO. 64/19/2/1 KA 16/49 & KHASRA NO. 64/20 KA 29/94, NEAR RADHA SWAMI, TARN TARAN ROAD, VILLAGE - PATTI, DISTT.-TARN TARAN, PUNJAB. - 143416
PH :9780038335.

PHAGWARA

2162. MARWAHA AUTOS (A UNIT OF INDERJIT MARWAHA AUTOS PRIVATE LIMITED) (--01), PLOT NO-62, INDUSTRIAL AREA, NEAR JCT BRIDGE LUDHIANA - 141001
PH :9779166004.

PHILLAUR

2163. LOVELY AUTOS (--01), OLD NAWANSHAHR ROAD CIVIL LINE, PHILLAUR, DISTRICT JALANDHAR - 144410
PH :9815069814.

POHIR

2164. LOVELY AUTOS (--01), LUDHIANA-MALERKOTLA ROAD, NEAR SODHI MARRIAGE PALACE, POHIR, DISTRICT LUDHIANA, PUNJAB. - 141204
PH :9915020513.

RAIKOT

2165. GULZAR MOTORS PVT LTD (--01), BARNALA BY PASS ROAD, RAIKOT - 141109
PH :9814160099.

RAJPURA

2166. DIVINE AUTOWORLD LLP (--01), VILLAGE BADHAK, RAJPUR PATIALA ROAD, RAJPURA - 140401

RAMPURA PHUL

2167. TARA AUTOMOBILES (--01), RAMPURA -BARNALA ROAD, RAMPURA PHUL - 151103

RAYYA

2168. RISHABH FOURWHEELS PVT LTD (--01), NH-1, GT ROAD RAYYA, TEHSIL – BABA BAKALA, DISTRICT – AMRITSAR. - 143112
PH :9914708577.

ROOPNAGAR

2169. CM AUTO SALES PVT LTD (--01), CHANDIGARH ROPAR ROAD, ROPAR - 140001
PH :9915022802.

SAMANA

2170. HIRA AUTOMOBILES LTD (--01), KEWAT NO. 948/950, KHATUNI NO. 1427, KHASRA NO. 101/27(4-7), PATIALA SAMANA ROAD, SAMANA, DIST.-PATIALA, STATE PUNJAB. - 147101
PH :9217048236.

SANGRUR

2171. MAX AUTOMOBILES (--01), DHURI ROAD, SANGRUR, - 148024

SHAHKOT

2172. LOVELY AUTOS (--01), PUBLIC SCHOOL ROAD, SHAHKOT, DISTRICT – JALANDHAR, PUNJAB. - 144702

SIRHIND

2173. HOSHIARPUR AUTOMOBILES (--01), KHEWAT KHATONI NO. 802/1049 & 821/1070 KHEWAT KHAS NO. 43/1/2/1 (1-0), BESIDE SBI BANK, BASSI ROAD, SIRHIND, TEHSIL AND DISTRICT – FATEHGARH SAHIB - 140406

SULTANPUR LODHI

2174. MARWAHA AUTOS (A UNIT OF INDERJIT MARWAHA AUTOS PRIVATE LIMITED) (--01), NEAR TALWADI BRIDGE, TALWANDI ROAD, SULTANPUR LODHI, DISTRICT -KAPURTHALA - 144626
PH :9779166004.

SUNAM

2175. MAPSKO AUTO INDIA PVT LTD (--01), BHATINDA ROAD, SUNAM, DISTRICT - SANGRUR SUNAM, PUNJAB - 148028

TALWANDI BHAI

2176. PLUTON DREAMWORKS PRIVATE LIMITED (--01), MOGA ROAD,, NEAR FUN ISLAND, - 142050

TALWANDI SABO

2177. TARA AUTOMOBILES (--01), TALWANDI RAMA MAIN ROAD, NEAR VILLAGE-JAJJAL, RAMAMANDI,TALWANDI SABO, BHATINDA - 1551302

TALWARA

2178. HOSHIARPUR AUTOMOBILES (--07), DAM ROAD, NEAR KALI MATA MANDIR, VILLAGE-NAGAR, TALWARA, PUNJAB - 144216

TANDA

2179. HOSHIARPUR AUTOMOBILES (--06), VILL.PULPUKHATA, MIANI ROAD, TANDA - 144203

TAPA

2180. MAPSKO AUTO INDIA PVT LTD (--01), BHATINDA ROAD, TAPA, DISTRICT - BARNALA,, TAPA, PUNJAB - 148108

TARAGARH

2181. PATHANKOT VEHICLEADES PVT LTD (--01), VILLAGE - RAHIMPUR, VPO-TARAGARH, TEHSIL & DISTT. PATHANKOT, HIMACHAL PRADESH - 143534
PH :9988639963.

TARN TARAN

2182. JAYCEE MOTORS PVT LTD (--01), VILLAGE – KAKKA, KANDIALA, NEAR SANDHU PETROL PUMP, AMRITSAR ROAD, TARAN TARAN, PUNJAB - 143401
PH :9780038039.

TARSIKKA

2183. BABA AUTOS (--01), NEAR HDFC BANK, MAIN BAZAAR, TARSIKKA, PUNJAB - 143116

ZIRA

2184. PLUTON DREAMWORKS PRIVATE LIMITED (--01), MAKHU ROAD,NEAR HARBIR PETRO, - 142047

ZIRAKPUR

2185. TRICITY AUTOS (--01), PATIALA HIGHWAY,VILLAGE - NABHA, ZIRAKPIR, PUNJAB - 140603
PH :9988882330.

RAJASTHAN

AANDHI

2186. K.P. AUTOMOTIVES PVT LTD (--01), KHASRA NUMBER 11 25 , VILL AANDHI , DISTT JAIPUR, RAJASTHAN- 303001 - 303001
PH :9549656559.

ABU ROAD

2187. NAVNEET MOTORS (--01), PLOT NO. E-26, RIICO AMBAJI INDUSTRIAL AREA, PALANPUR HIGHWAY, ABU ROAD DISTT. SIROHI - 307026
PH :7665000644.

ACHROL

2188. KTL AUTOMOBILE PRIVATE LIMITED (--01), KHASRA NO. 37/1522,GRAM ANI, ACHROL, DELHI ROAD,TEHSIL – ACHROL, DISTRICT – JAIPUR, 303002 - 303002
PH :7412077022.

AHORE

2189. AURIC MOTORS (A UNIT OF AUDI MOTORS PVT LTD) (--01), MADHOPURA, NEAR KARNAWATI HOSPITAL, AHORE, DISTRICT – JALORE, RAJASTHAN PIN CODE: 307029 - 307029

AJMER

2190. AJMER AUTO AGENCIES PVT LTD (--01), SRINAGAR ROAD,AJMER (RAJASTHAN) - 305001
PH :9314955201.

2191. RELAN MOTORS PVT LTD (--01), NEAR BIRLA WATER TANK, PARABATPURA BYEPASS, AJMER - 305001

2192. RELAN MOTORS PVT LTD (--02), F-243 RIICO INDUSTRIAL AREA, PALRA, AJMER - 305001

2193. AJMER AUTO AGENCIES PVT LTD (--05), KHASRA NO.343/2, 344, 345, 347 GHUGHRA GHATI, JAIPUR ROAD, AJMER. - 305001
PH :9314955201.

AJMER ROAD, JAIPUR

2194. KTL AUTOMOBILE PRIVATE LIMITED (--06), PLOT NO:-39-40,MAA KARNI NAGAR-E PANCHAY, PANCHAYAWALA NEAR VAISHALI NAGAR ,SIRSI - 302017

AKLERA

2195. BHATIA & COMPANY (A UNIT OF BHATIA CORPORATION PVT LTD) (--01), NH-52, RAM NAGAR COLONY, AKLERA, JHALAWAR, PIN-326033, RAJASTHAN - 326033
PH :9799299971.

ALWAR

2196. M G MOTORS (--01), MUKESH GENERAL FINANCE COMPANY, ROAD NO. 2, NEAR MEO BOARDING, ALWAR - 301001
PH :9001795520.

2197. M G MOTORS (--02), KHASRA NO.803/198, BHUGORE TIRAHA, NEAR ALWAR PUBLIC SCHOOL, JAIPUR ROAD, ALWAR - 301001
PH :9001795520.

2198. M G MOTORS (--03), VAISHALI NAGAR, OLD DELHI ROAD, ALWAR, PIN-301001, RAJASTHAN - 301001

AMET

2199. TECHNOY MOTORS INDIA PVT LTD (--01), AMET , DISTT RAJSAMAND, RAJASTHAN - 313332

ANOOPGARH

2200. AURIC MOTORS (A UNIT OF AUDI MOTORS PVT LTD) (--01), PLOT NO. AMEDKAR CHARAHARA,RAILWAY STATION ROAD ,ANUPGARH (ANOOPGARH),DISTT SRI GANGANAGAR . - 335701

ANTA

2201. BHATIA & COMPANY (A UNIT OF BHATIA CORPORATION PVT LTD) (--01), KOTA-BARAN ROAD, ANTAH, DIST.-BARAN. - 325502
PH :9413379001.

ASIND

2202. CHAMPION CARS (PREM CARS PVT LTD) (--01), DEV TOWERS, BEAWAR ROAD, ASIND, DISTRICT – BHILWARA, RAJASTHAN - 311302 - 311302
PH :9887063862.

ATRU

2203. SUWALKA MOTORS PRIVATE LIMITED (--01), SALPURA ROAD, ATRU, NEAR DEPUTY OFFICE, PIN-325218, RAJASTHAN - 325218
PH :8306333731.

BADI SDADRI

2204. BHATIA & COMPANY (A UNIT OF BHATIA CORPORATION PVT LTD) (--01), MAIN CHITTOR ROAD, NEXT TO HP PETROL PUMP, BHOPATPURA, BARI SADRI, DIST. CHITTORGARH, PIN-312403, RAJASTHAN - 312403

BAGRU

2205. PREM MOTORS PVT LTD (--01), KHASRA NO. 1185, NH 8 AJMER ROAD, BAGRU, JAIPUR DISTRICT, RAJASTHAN - 303007

BAJJU

2206. DUDI AUTOMOBILES (A UNIT OF DMAS AUTOMOBILES PVT LTD) (--01), BAJJU, DISTT BIKANER, RAJASTHAN - 334305

BALESAR

2207. AURIC MOTORS (A UNIT OF AUDI MOTORS PVT LTD) (--01), KHASRA NO. 2167 JODHPUR JAISALMER ROAD, VILL:- BALESAR SATTA, TEH:- BALESAR , DIST:- JODHPUR (RAJ.) - 342203
PH :7412087344.

BALOTRA

2208. L M J SERVICES LTD (6502--05), JODHPUR BALOTRA ROAD,BALOTRA, RAJASTHAN - 344022
PH :8005898360.

BANDANWARA

2209. RELAN MOTORS PVT LTD (--01), SHOP NO. 9 & 10, AJMER HIGHWAY, BANDANWARA, DIST. AJMER, PIN-305622 - 305622

BANSUR

2210. FORTUNE CARS (A UNIT OF JYOTI AUTOMOBILES PVT LTD) (--01), KOTPUTLI ROAD, NEAR SUBHASH CHOWK, BANSUR, RAJASTHAN - 301402
PH :8875005116.

BANSWARA

2211. NAVNEET MOTORS (--01), NEAR J.C. MILL,OPPOSITE AKASHWANI,DAHOD ROAD,BANSWARA - 327001

BAORI

2212. AURIC MOTORS (A UNIT OF AUDI MOTORS PVT LTD) (--01), SHOP NO. 04, SHRI BALAJI NAGAR, NEAR SBI, BAORI, DIST. JODHPUR, PIN-342037, RAJASTHAN - 342037

BARAN

2213. BHATIA & COMPANY (A UNIT OF BHATIA CORPORATION PVT LTD) (6101--03), BESIDE OJHA METAL, ATRU ROAD, BARAN - 325205
PH :8929854244.

BARMER

2214. L M J SERVICES LTD (6502--06), G-216, RIICO INDUSTRIAL AREA, BARMER - 344001
PH :8005898360.

2215. L M J SERVICES LTD (--01), NH# 68, OPP. SADAR THANA - 344001
PH :8005898360.

BASSI

2216. PREM MOTORS PVT LTD (--01), MOHAN PURA BASSI, JAIPUR, RAJASTHAN - 303301

BAYTU

2217. L M J SERVICES LTD (--01), NH-8 ,NEAR JAGDAMBA PETROL PUMP , BAYTU - 344034
PH :8094011126.

BEAWAR

2218. RELAN MOTORS PVT LTD (--01), PLOT NO 1, INDIRA GANDHI UDYOGPURI , AJMER ROAD ,BEAWAR, RAJASTHAN . - 305202
PH :9587687000.

BEGUN

2219. BHATIA & COMPANY (A UNIT OF BHATIA CORPORATION PVT LTD) (--01), BHATIA & CO. (A UNIT OF BHATIA CORPORATION PVT LTD),IN FRONT OF GURUKUL, CHITTOR ROAD,BEGUN, TEHSIL – BEGUN, DISTRICT CHITTORGARH, 312023

BEHROR

2220. M G MOTORS (--01), B-168, RIICO INDUSTRIAL AREA, PHASE-II, OPP. APEX TUBE, BEHROR, DISTT: ALWAR. - 301701
PH :9001795520.

BHADRA

2221. AURIC MOTORS (A UNIT OF AUDI MOTORS PVT LTD) (--01), CHAK NUMBER-8,BARANI, NEAR HISAR BYEPASS BHADRA -BALSAMAND ROAD ,BHADRA. - 335501

BHARATPUR

2222. TM MOTORS PVT LTD (--01), BRIJ VIHAR COLONY,,MADARPUR ROAD,BHARATPUR,RAJASTHAN - 321001
PH :9251423392.

BHAWANI MANDI

2223. SUWALKA MOTORS PRIVATE LIMITED (--01), K.NO. 327 MANDAVI OPPOSITE SDM OFFICE JHALAWAR ROAD, BHAWANIMANDI,JHALAWAR- 326502. - 326502
PH :9414242256.

BHILWARA

2224. CHAMPION CARS (PREM CARS PVT LTD) (--01), CHITTORGARH ROAD, BHILWARA, RAJASTHAN, - 311001

2225. BHATIA & COMPANY (A UNIT OF BHATIA CORPORATION PVT LTD) (--01), PLOT NO. 1/316/2, AJMER ROAD, BHILWARA, RAJASTHAN - 311001

2226. CHAMPION CARS (UNIT OF PREM CARS PVT. LTD) (--02), ARATI NO.255-258, GRAM JODHRAS, BHILWARA. - 311011

BHINDER

2227. TECHNOY MOTORS INDIA PVT LTD (--01), NEAR RAILWAY STATION,SALUMBAR CHOURAHA, BHINDER - 313603
PH :8306111337.

BHINMAL

2228. SHRI KRISHNA AUTOSALES PVT LTD (--01), KHASRA NO. 2281, KARADA CROSSING, BHINMAL, DISTRICT - JALORE, RAJASTHAN. - 343029
PH :9610242790.

BHIWADI

2229. FORTUNE CARS (A UNIT OF JYOTI AUTOMOBILES PVT LTD) (--01), OPP. INDAG RUBBER,MAIN ROAD ,BHIWADI - 301019
2230. FORTUNE CARS (A UNIT OF JYOTI AUTOMOBILES PVT LTD) (--02), F-458-C,RIICO,INDUSTRIAL AREA,BHIWADI - 301019
2231. FORTUNE CARS (A UNIT OF JYOTI AUTOMOBILES PVT LTD) (--04), KHASRA NO. 656/431, ALWAR ROAD, BHIWADI. - 301019

BIJAYNAGAR

2232. AJMER AUTO AGENCIES PVT LTD (--01), KHASRA NO 39 , AJMER -BHILWARA HIGHWAY CITY -BIJAYNAGAR DISTRICT – AJMER ,RAJASTHAN - 305624
PH :8890902472.

BIKANER

2233. AURIC MOTORS (A UNIT OF AUDI MOTORS PVT LTD) (7101-71-01), OPP. URMUL DAIRY PLANT,GANGANAGAR ROAD,BIKANER - 334004
2234. AURIC MOTORS (A UNIT OF AUDI MOTORS PVT LTD) (7101-71-04), JAIPUR BYE PASS,BIKANER , - 334004
2235. AURIC MOTORS (A UNIT OF AUDI MOTORS PVT LTD) (7101-71-05), OPP. AVYYAPPA TEMPLE, K. K. COLONY, BIKANER - 334003
2236. DUDI AUTOMOBILES (A UNIT OF DMAS AUTOMOBILES PVT LTD) (7102-71-01), KHASRA NO. 376/33, JAIPUR ROAD, NH-11, BIKANER, RAJASTHAN. - 334001
PH :8929834417.
2237. AURIC MOTORS (A UNIT OF AUDI MOTORS PVT LTD) (7101-71-07), ROAD NO.-4, IND. AREA, RANI BAZAAR,, RANI BAZAAR, BIKANER - 340323

BILARA

2238. L M J SERVICES LTD (--01), BANGANGA MOD, JODHPUR ROAD, BILARA , RAJASTHAN - 342602
PH :8104698935.

BONLI

2239. AURIC MOTORS (A UNIT OF AUDI MOTORS PVT LTD) (--01), OPP. GOPAL AGRO PETROL PUMP NIWAI RD, BONLI, RAJASTHAN - 322023

BORUNDA

2240. AURIC MOTORS (A UNIT OF AUDI MOTORS PVT LTD) (--01), 42/34, GOTAN ROAD, BORUNDA, DIST.-JODHPUR, PIN-342604, RAJASTHAN - 342604
PH :9413311745.

BUNDI

2241. BHATIA & COMPANY (A UNIT OF BHATIA CORPORATION PVT LTD) (6101--02), SUMAN PLAZA, NEAR TEACHER'S COLONY, CHITTOR ROAD, OPPOSAITE ICICI ATM, BUNDI - 323001
PH :8929853245.

CHAKSU

2242. K.P. AUTOMOTIVES PVT LTD (1104--03), TONK ROAD, CHAKSU - 303901

CHANDAN

2243. L M J SERVICES LTD (--01), JAISALMER ROAD ,CHANDAN , DISTT JAISALMER ,RAJASTHAN - 345031
PH :8094011126.

CHIRAWA

2244. AURIC MOTORS (A UNIT OF AUDI MOTORS PVT LTD) (--01), NEAR PILANI CIRCLE, LOHARU ROAD, STATE HIGHWAY-8, CHIRAWA - 333026

CHITTORGARH

2245. BHATIA & COMPANY (A UNIT OF BHATIA CORPORATION PVT LTD) (--01), PLOT NO. 1001/1-1002/1,NIMBAHERA ROAD,CHITTORGARH - 312001

CHOMU

2246. KTL AUTOMOBILE PRIVATE LIMITED (--01), KHARSA NO.695, JAIPUR SIKAR BYPASS ROAD, CHOMU, RAJASTHAN. - 303702
PH :7412077034.
2247. SATNAM MOTOCORP PVT LTD (--01), NEAR CM CHOPRA HOSPITAL, JAIPUR ROAD, CHOMU, DISTRICT – JAIPUR, RAJASTHAN - 303702
PH :8302090000.

CHURU

2248. T R SAWHNEY MOTORS PVT LTD (--01), KHASRA NO. 913/54, JAIPUR ROAD, VILLAGE RAMSARA, CHURU, PIN-331001, RAJASTHAN - 331001
PH :9782078531.

DABI

2249. BHATIA & COMPANY (A UNIT OF BHATIA CORPORATION PVT LTD) (--01), KARITALAI-MAHADEV MARKET, CHARBHUJA ROAD, DESURI (DISTRICT PALI) - 323022

DANTA RAMGARH

2250. JAMU AUTOMOBILES PVT LTD (--01), KHASRA NO. 1016/256, VILLAGE - RAMGARH, TEHSIL - DATAH RAMGARH, DIST.-SIKAR. - 332703
PH :9116816905.

DAUSA

2251. VIPUL MOTORS PVT LTD (1102--03), AGRA JAIPUR ROAD, DAUSA - 303303
PH :9672211333.

DECHU

2252. L M J SERVICES LTD (--01), OPP INDIAN OIL PUMP, JODHPUR ROAD, DECHU - 342314

DEGANA

2253. SHRI MANGALAM AUTO PRIVATE LIMITED (--01), PLOT NUMBER -189 , NEAR NAGAUR RAILWAY STATION ROAD, DEGANA - 341503
PH :7230055955.

DEOLI

2254. K.P. AUTOMOTIVES PVT LTD (--01), KOTA-JAIPUR HIGHWAY, NH-12, DEOLI - 304804
PH :8696925259.

DESURI

2255. L M J SERVICES LTD (--01), MAHADEV MARKET, CHARBHUJA ROAD, DESURI, DISTT PALI , RAJASTHAN - 306703

DHARIYAWAD

2256. BHATIA & COMPANY (A UNIT OF BHATIA CORPORATION PVT LTD) (--01), PRATAPGARH ROAD, DHARIYAWAD , DIST. - PRATAPGARH, RAJASTHAN - 313605 - 313605
PH :9829736081.

DHOLPUR

2257. TM MOTORS PVT LTD (--01), TM MOTORS PVT. LTD., GT ROAD DHOLPUR, RAJASTHAN. - 328001
PH :8094777862.

DIDWANA

2258. SHRI MANGALAM AUTO PRIVATE LIMITED (--01), KHASRA NO. 73, NEAR CHOTI DEVI SCHOOL, LADNU ROAD, DIDWANA , DISTRICT – NAGAUR.
KHARSA NO. 2778, DIDWANA BYPASS, DIDWANA, DISTRICT NAGAUR, RAJASTHAN - 341303
PH :7230055924.

DOONI

2259. AURIC MOTORS (A UNIT OF AUDI MOTORS PVT LTD) (--01), NEAR POLICE STATION, DOONI, DIST. TONK, RAJASTHAN - 304802 - 304802

DUDU

2260. PREM MOTORS PVT LTD (--01), KHASRA NO.1107 & 1108, OPPOSITE POWER HOUSE SERVICE LANE, NH-8, DUDU. - 303008
PH :8058411181.

DUNGARPUR

2261. NAVNEET MOTORS (4902--02), G-71, INDUSTRIAL AREA, DUNGARPUR - 314001

FALNA

2262. L M J SERVICES LTD (--01), OPPOSITE PRAKASH DINING HOTEL ,FALNA - 306116

FATEHNAGAR

2263. TECHNOY MOTORS INDIA PVT LTD (4903--03), PLOT NO.15, FATENAGAR SANWAR ROAD, UDAIPUR-CHITTORGARH HIGHWAY NO.76, FATEHNAGAR-313205 DISTT. UDAIPUR - 313205

FATEHPUR (RJ)

2264. JAMU AUTOMOBILES PVT LTD (--01), NH-52, RATANGARH ROAD,, DISTT SIKAR - 332301

FATHEGARH

2265. L M J SERVICES LTD (--01), NEAR POLICE STATION, FATEHGARH, DIST. - JAISALMER, RAJASTHAN - 345027 - 345027

GANGAPUR CITY

2266. PREM MOTORS PVT LTD (--01), KHASRA NO. 5854, 5858, 5860, 5861, VILLAGE UDAI KALAN, THE GANGAPUR CITY - 322201
PH :8058794122.

GHARASNA

2267. DUDI AUTOMOBILES (A UNIT OF DMAS AUTOMOBILES PVT LTD) (--01), NH-11,BIKANER ROAD,, ABHISHEK(MEENA)FILLING STATION KE PASS, - 335707

GOGUNDA

2268. TECHNOY MOTORS INDIA PVT LTD (--01), NH 27, GOGUNDA, DISTRICT-UDAIPUR - 313705

GOVINDGARH

2269. VIPUL MOTORS PVT LTD (--01), JAI BHAWANI MARKET, NH-2, GOVINDGARH, DIST. JAIPUR, PIN-303712, RAJASTHAN - 303712
2270. M G MOTORS (--01), SIKRI ROAD,GOVINDGARH, - 301604

GUDAMALINI

2271. L M J SERVICES LTD (--01), KHARSA NO. 1360/5, RATHORO KI DHANI, JODHPUR ROAD, GUDAMALANI, DISTRICT – BARMER, RAJASTHAN – 344031. - 344031
PH :8094011126.

GUDHAGORJI

2272. AURIC MOTORS (A UNIT OF AUDI MOTORS PVT LTD) (--01), BHORKI ROAD, GUDHAGORJI, DISTRICT – JHUNJHUNUN, RAJASTHAN. - 333022
PH :7412059848.

HANUMANGARH

2273. AURIC MOTORS (A UNIT OF AUDI MOTORS PVT LTD) (7101--03), JUNCTION TOWN ROAD,HANUMANGARH - 335512
2274. AURIC MOTORS (A UNIT OF AUDI MOTORS PVT LTD) (7101--06), PLOT NUMBER 134, INDUSTRIAL AREA, HANUMANGARH, RAJASTHAN. - 335512
PH :9413311745.

HINDAUN

2275. FORTUNE CARS (A UNIT OF JYOTI AUTOMOBILES PVT LTD) (--01), KHASRA NO. 737, VILLAGE – PATTI NARAINPUR, NEAR HANUMAN MANDIR, HINDAUN-MAHWA ROAD, HINDAUN. - 322230

ITAWA

2276. BHATIA & COMPANY (A UNIT OF BHATIA CORPORATION PVT LTD) (--01), NAHER KE PASS, KHATOLI ROAD, ITAWA, ITAWA, RAJASTHAN - 325004

JAIPUR

2277. VIPUL MOTORS PVT LTD (1102-11-01), F-124A,MALVIYA INDUSTRIAL AREA,MALVIYA NAGAR,JAIPUR - 302017
2278. K.P. AUTOMOTIVES PVT LTD (1104-11-01), E-198, SANGANER INDUSTRIAL AREA,MANSAROVAR,JAIPUR - 302020
2279. PREM MOTORS PVT LTD (1112-11-02), 12 13,SUDARSHANPURA INDUSTRIAL AREA, JAIPUR - 302006
2280. VIPUL MOTORS PVT LTD (1102-11-05), 29, INDUSTRIAL AREA, JHOTWARA, JAIPUR - 302012
2281. PREM MOTORS PVT LTD (1112-11-01), PLOT NO. E101/A, VKI , JAIPUR - 302039
2282. SATNAM MOTOCORP PVT LTD (1113-11-01), PLOT NO. E-524, SITAPURA INDUSTRIAL AREA, JAIPUR – 302 022, RAJASTHAN. - 302022
2283. KTL AUTOMOBILE PRIVATE LIMITED (1115-11-01), PLOT NO. 13B, JHOTWARA INDUSTRIAL AREA, JAIPUR. - 302012
PH :7412077022.
2284. PREM MOTORS PVT LTD (1112-11-03), PLOT NO. B-12, MALVIYA NAGAR, JAIPUR. - 302017
2285. KTL AUTOMOBILE PRIVATE LIMITED (1115-11-02), KHASRA NO 1210-1216/2959 , BHANKROTA , TEH SANGANER , DISTRICT JAIPUR. - 302026
PH :7412077007.
2286. KTL AUTOMOBILE PRIVATE LIMITED (1115-11-03), ORBIT MALL CIVIL LINES METRO STATION AJMER ROAD ,JAIPUR. - 302006
PH :7412077007.
2287. AURIC MOTORS (A UNIT OF AUDI MOTORS PVT LTD) (1116-11-C1), COMMERCIAL PLOT NO. J4, COMMERCIAL BELT B, VT ROAD, NEW SANGANER ROAD, MANSAROVAR SCHEME, JAIPUR, RAJASTHAN 302020 - 302020
PH :9571105651.
2288. K.P. AUTOMOTIVES PVT LTD (1104-11-G1), B-1, GOVIND MARG, ADARSH NAGAR, JAIPUR – 302004 - 302004
PH :9549656559.
2289. KTL AUTOMOBILE PRIVATE LIMITED (1115-11-04), CHOKDI HAWALI SHAHAR, SHIRKI SHAHAR, NEAR IDGAH, BILOCHOYAN MOHALLA, TRANSPORT NAGAR, DELHI ROAD, JAIPUR - 302002 - 302002
PH :9772210922.
2290. K.P. AUTOMOTIVES PVT LTD (1104-11-G2), PLOT NO. 4, RAJIV COLONY, RPA ROAD, OPP. RADHA SWAMI SATSANG BHAWAN, SHASTRI NAGAR, JAIPUR 302016. - 302016
PH :9549656559.
2291. SANGA AUTONATION (A UNIT OF TAYAL INDIA MOTORS PVT LTD) (1117-11-01), SECTOR 35, PRATAP NAGAR, SANGANER, JAIPUR, PIN-302023, RAJASTHAN - 302033
PH :9929365847.
2292. K.P. AUTOMOTIVES PVT LTD (1104-11-09), KHASRA NO. 74/4 & 75/1, NEW KHANDELWAL NAGAR, GONER ROAD, NEAR JAIPUR AGRA HIGHWAY, JAIPUR, RAJASTHAN 302031 - 302031
2293. K.P. AUTOMOTIVES PVT LTD (--08), PLOT NO. 280, RAJENDRA NAGAR A, NIRMAN NAGAR, JAIPUR - 302031

JAISALMER

2294. L M J SERVICES LTD (--01), PLOT NO.36, 37, MAHESH REFUGEE COLONY,HDC SOCIETY, DABLA ROAD, JAISALMER (RAJASTHAN) - 345001
PH :8005898360.

JAITARAN

2295. L M J SERVICES LTD (--01), KHASRA NO. 784, JAIPUR-JODHPUR BYE PASS ROAD, JAITARAN, DIST.-PALI. - 306302
PH :9269971266.

JALORE

2296. SHRI KRISHNA AUTOSALES PVT LTD (--01), KHASRA NO.6809/2616, 2623, INDUSTRIAL AREA, JALORE-BHINMAL ROAD, JALORE - 343001

JAMWA RAMGARH

2297. K.P. AUTOMOTIVES PVT LTD (--01), KHASRA NUMBER -228/169,OPP UDAY AUTOMOBILES,JAIPUR ALWAR ROAD –JAMWA RAMGRAH. - 303109

JAWAL

2298. TECHNOY MOTORS INDIA PVT LTD (--01), OPP. HP PETROL PUMP, SIROHI-JALORE ROAD, JAWAL, DIST. – SIROHI, RAJASTHAN - 307801. - 307801

JHADOL

2299. TECHNOY MOTORS INDIA PVT LTD (--01), KHASRA NO. 186/1, NH # 8, NEAR ASHOK LEYLAND WORKSHOP, SARDARPURA, SOJAT, PIN-306104, RAJASTHAN - 306104
PH :8890673099.

JHALAWAR

2300. BHATIA & COMPANY (A UNIT OF BHATIA CORPORATION PVT LTD) (6102--02), OPP. BALAJI KI CHHATRI , KHEL CIRCULAR STADIUM, BUS STAND ROAD, JHALAWAR - 326001
PH :9413350336.

JHUNJHUNUN

2301. AURIC MOTORS (A UNIT OF AUDI MOTORS PVT LTD) (--02), E1-2, AUTOMOBILES SERVICE SECTOR, RIICO INDUSTRIAL AREA, PHASE-2, SIKAR JAIPUR ROAD, JHUNJHUNU. - 333001

JOBNER

2302. PREM MOTORS PVT LTD (--01), KHASRA NO. 758 & 754, BABER WALON KI DHANI, JOBNER, TEHSIL – PHULERA, DISTRICT – JAIPUR, RAJASTHAN - 303328
PH :8058411181.

JODHPUR

2303. L M J SERVICES LTD (6502-65-01), PRATAP NAGAR,JODHPUR - 340002
PH :9950496202.
2304. L M J SERVICES LTD (6502-65-04), OPP TO RFC OFFICE,NEW POWER HOUSE ROAD,JODHPUR - 342003
PH :8094011127.
2305. SHRI KRISHNA AUTOSALES PVT LTD (6503-65-01), 32-A,HEAVY INDUSTRIAL AREA,NR FCI GODOWNS, JODHPUR - 342005
2306. L M J SERVICES LTD (6502--09), B-8,9,10, MARUDHAR INDUSTRIAL AREA, PHASE 1, BASNI, JODHPUR - 342008
PH :8094011147.
2307. L M J SERVICES LTD (6502--0C), 21/1, PAL MAIN BALOTRA ROAD, NEAR D.P.S. CIRCLE, JODHPUR - 342002
PH :7230057721.
2308. AURIC MOTORS (A UNIT OF AUDI MOTORS PVT LTD) (6504-65-01), C-62 BASNI INDUSTRIAL AREA, PHASE-1, JODHPUR - 342005
PH :7412059839.
2309. L M J SERVICES LTD (6502-65-0D), PARSHWANATH COLONY, KAYLANA ROAD, JODHPUR. - 342001
PH :8696916455.
2310. L M J SERVICES LTD (6502-65-10), KHASRA NO. 357/5, BANAR ROAD, OPPOSITE VIDHYA PUBLIC SCHOOL, JODHPUR, RAJASTHAN - 342003
PH :7222002424.

KAPASAN

2311. BHATIA & COMPANY (A UNIT OF BHATIA CORPORATION PVT LTD) (--01), OLD RASHMI ROAD,KAPASAN, , DISTT. CHITTORGARH, RAJASTHAN - 312202

KAPRAIN

2312. BHATIA & COMPANY (A UNIT OF BHATIA CORPORATION PVT LTD) (--01), MEGA HIGHWAY ROAD, NEAR PETROL PUMP, KAPRAIN DISTT. BUNDI - 323301
PH :9413379001.

KEKRI

2313. AJMER AUTO AGENCIES PVT LTD (--03), KOTA SAWAR ROAD,KEKRI - 305404
PH :9314955201.

KHAJUWALA

2314. AURIC MOTORS (A UNIT OF AUDI MOTORS PVT LTD) (--01), DANTOR ROAD, KHAJUWALA, DIST. - BIKANER, RAJASTHAN. - 340323
PH :9982299866.

KHANDAR

2315. PREM MOTORS PVT LTD (--01), SAWAI MADHOPUR-KHANDAR RD., KHANDAR, RAJASTHAN - 322025. - 322025
PH :8058899960.

KHANPUR

2316. SUWALKA MOTORS PRIVATE LIMITED (--01), BYPASS CHORAYA, MEGA HIGHWAY BARAN-JHALAWAR, KHANPUR, TEHSIL – KHANPUR, DISTRICT – JHALAWAR, RAJASTHAN PIN CODE: 326038 - 326038
PH :8306333731.

KHERLI

2317. M G MOTORS (--01), KHERLI KATHUMAR ROAD, VILLAGE KHERLI, DISTT. ALWAR, RAJASTHAN - 321606
PH :9001795520.

KHERWARA

2318. TECHNOY MOTORS INDIA PVT LTD (--01), OPP. ATITHI PALACE, VILLAGE BADLA, NH 8,KHERWARA, TEHSIL – KHERWARA, DISTRICT – UDAIPUR, RAJASTHAN PIN CODE: 313803

KISHANGARH

2319. AJMER AUTO AGENCIES PVT LTD (--01), R K LINK ROAD, - 305802
PH :9314391011.

KISHANGARH BAS

2320. FORTUNE CARS (A UNIT OF JYOTI AUTOMOBILES PVT LTD) (--03), KISHANGARH BIWADI HIGHWAY, NEAR KISHANGARH, DISTRICT ALWAR - 301405

KOLAYAT

2321. DUDI AUTOMOBILES (A UNIT OF DMAS AUTOMOBILES PVT LTD) (--01), NEAR PANCHAYAT SAMITI JHAJJU ROAD, KOLAYAT - 334302

KOTA

2322. BHATIA & COMPANY (A UNIT OF BHATIA CORPORATION PVT LTD) (6101-61-01), 13-16 B,INDUSTRIAL ESTATE, KOTA - 324007
PH :8929400447.
2323. BHATIA & COMPANY (A UNIT OF BHATIA CORPORATION PVT LTD) (6102-61-01), AUTO MOBILE ZONE,G-11/12 INDUSTRIAL AREA, KOTA - 324005
2324. BHATIA & COMPANY (A UNIT OF BHATIA CORPORATION PVT LTD) (6101-61-04), 3(K),CHAMBAL INDUSTRIAL AREA,KOTA,RAJASTHAN - 324007
PH :8929400447.
2325. BHATIA & COMPANY (A UNIT OF BHATIA CORPORATION PVT LTD) (6101--05), E-46, CHAMBAL INDUSTRIAL AREA, KOTA - 324007
PH :8929400447.
2326. BHATIA & COMPANY (A UNIT OF BHATIA CORPORATION PVT LTD) (6101--06), PLOT NO. E-222, ROAD NUMBER 5, INDRAPRASTHA INDUSTRIAL AREA, KOTA, RAJASTHAN. - 324005
2327. SUWALKA MOTORS PRIVATE LIMITED (--01), RIDDHI SIDDHI NAGAR, KUNHARI, BUNDI ROAD, KOTA, RAJASTHAN. - 324008
2328. SUWALKA MOTORS PRIVATE LIMITED (6104--02), PLOT NO. A172 (B-1) INDRAPRASTHA INDUSTRIAL AREA, KOTA, RAJASTHAN. - 324003

KOTPUTLI

2329. PREM MOTORS PVT LTD (--01), NH-8, BUCHARA COLONY, OPP. SHAKTI VIHAR, KOTPUTLI, JAIPUR - 303108
2330. PREM MOTORS PVT LTD (--02), KHASRA NO-636, KOTPUTLI, DIST. JAIPUR, RAJASTHAN - 303108

KUCHAMAN

2331. SHRI MANGALAM AUTO PRIVATE LIMITED (--01), SUDARSHAN NAGAR, BURSU ROAD, KHASRA NO.148, KUCHAMAN. - 341508
PH :7230055928.

LADNU

2332. SHRI MANGALAM AUTO PRIVATE LIMITED (--01), KHASRA NO. 1011, SUJANGARH ROAD, LADNUN - 341306
PH :7412044506.

LAHAR

2333. NIKUNJ MOTORS (A UNIT OF RSKS AUTOMOTIVES PVT LTD) (--01), WARD NO.09,, BHIND BHANDER ROAD,LAHAR, - 477001

LALSOT

2334. VIPUL MOTORS PVT LTD (--01), PLOT NO.22,23, KHASRA NO.1502-03, NARAYAN VIHAR, SAWAI MADHOPUR ROAD, LALSOT, RAJASTHAN - 303502
PH :9672211333.

LOSAL

2335. JAMU AUTOMOBILES PVT LTD (--01), LOSAL-SALASAR-DIDWANA ROAD, OPPOSITE SHIV MANDIR, WARD NO. 1, LOSAL, RAJASTHAN - 332025. - 332025
PH :9057400761.

LUNI

2336. L M J SERVICES LTD (--01), NEAR SBI BANK, SALAWAS ROAD,LUNI, TEHSIL – LUNI,DISTRICT – JODHPUR,RAJASTHAN PIN CODE: 342802 - 342802
PH :8094011126.

LUNKARANSAR

2337. DUDI AUTOMOBILES (A UNIT OF DMAS AUTOMOBILES PVT LTD) (--01), VISWAKARMA MARKET, BIKANER ROAD, LUNKARANSAR, BIKANER, RAJASTHAN - 334603. - 301026

MAHWA

2338. VIPUL MOTORS PVT LTD (--01), KHASRA NO.37/384, BHARATPUR ROAD BYE-PASS, N.H. -11, MAHWA, DISTT. DAUSA (RAJASTHAN) - 321608
PH :9672211333.

MAKRANA

2339. SHRI MANGALAM AUTO PRIVATE LIMITED (--01), KHASRA NO. 609/4, NEAR BAJAJ SHOWROOM, MANGLANA ROAD, MAKRANA, DISTRICT – NAGAUR. - 341505
PH :7230055934.

MALPURA

2340. K.P. AUTOMOTIVES PVT LTD (--01), PLOT NO.07, SHRI KALYAN NAGAR COLONY, JAIPUR-KEKRI ROAD, MALPURA - 304502
PH :8696925262.

MANDALGARH

2341. CHAMPION CARS (PREM CARS PVT LTD) (--01), OPP. MODEL SCHOOL, BIJOLIA ROAD, MANDALGARH, DISTRICT – BHILWARA, PIN-311604, RAJASTHAN
PH :9837325267.

MANGALWAD

2342. BHATIA & COMPANY (A UNIT OF BHATIA CORPORATION PVT LTD) (--01), NH-27, PAL KHERI,, MANGALWAD, CHHITORGARH, - 312024

MARWAR JUNCTION

2343. L M J SERVICES LTD (--01), 1-2 KRISHNA KUNJ.OPP ROADWAJ BUS STAND, MARWAR JUNCTION, PALI - 306001

MASUDA

2344. RELAN MOTORS PVT LTD (--01), BANDANWARA ROAD, MASUDA, RAJASTHAN- 305623 - 305623

MERTA

2345. SHRI MANGALAM AUTO PRIVATE LIMITED (--01), KHASRA NUMBER 1679, NH-89,MERTA ,RAJASTHAN. - 341510
PH :9116007201.

NADOTI

2346. FORTUNE CARS (--01), SH-25,VPO,NADAUTI ALWAR, GANGAPUR CITY STATE HIGHWAY - 322215

NAGAUR

2347. SHRI MANGALAM AUTO PRIVATE LIMITED (--01), KHASRA NO. 1479/982 & 1478/83, BIKANER ROAD, NAGAUR. - 341001
PH :9116008624.

NAINWA

2348. BHATIA & COMPANY (A UNIT OF BHATIA CORPORATION PVT LTD) (--01), UNIARA ROAD, OPP: PETROL PUMP, NAINWA, DIST. KOTA - 323801
PH :9413379001.

NARAYANPUR

2349. FORTUNE CARS (A UNIT OF JYOTI AUTOMOBILES PVT LTD) (--01), KHASRA NO. 2848, JAIPUR ROAD,NEAR NARAYANPUR BYPASS VILLAGE, NARAYANPUR TEHSIL – NARAYANPUR, DISTRICT – ALWAR,RAJASTHAN PIN CODE: 301024. - 301024
PH :8875004375.

NASIRABAD

2350. AJMER AUTO AGENCIES PVT LTD (--04), CHAVANI BOARD NO:1613, HAWA CHAKKI, NASIRABAD ROAD, NASIRABAD, DISTT. AJMER - 305601
PH :9314955201.

NAWALGARH

2351. AURIC MOTORS (A UNIT OF AUDI MOTORS PVT LTD) (--01), KHATA NO. 76, PUNIA KI DHANI, SIKAR ROAD, NAWALGARH, DISTRICT – JHUNJHUNU, RAJASTHAN PIN CODE: 333042 - 333042
PH :9928720360.

NEEM KA THANA

2352. JAMU AUTOMOBILES PVT LTD (--03), NEAR TOLL PLAZA, KOTPUTLI ROAD, NEEM KA THANA, SIKAR - 332713

NEEMRANA

2353. FORTUNE CARS (A UNIT OF JYOTI AUTOMOBILES PVT LTD) (--01), F-42 & 42(B), PHASE-1, NEEMRANA, TEHSIL: BEHROR, DISTT. ALWAR - 301705

NIMBAHERA

2354. BHATIA & COMPANY (A UNIT OF BHATIA CORPORATION PVT LTD) (--01), PLOT NO. 7-8, 33-34, 35-36, NIMBAHERA, DIST. -CHITTORGARH. - 312601

NIWAI

2355. K.P. AUTOMOTIVES PVT LTD (--01), VANASTHALI CIRCLE, NEAR PRATEEK GAS AGENCY, TONK ROAD, NIWAI, DISTRICT – TONK. - 304021
PH :8696925262.

NOHAR

2356. AURIC MOTORS (A UNIT OF AUDI MOTORS PVT LTD) (--01), OPP. RAILWAY STATION, NOHAR, DISTRICT-HANUMANGARH - 335523

NOKHA

2357. AURIC MOTORS (A UNIT OF AUDI MOTORS PVT LTD) (--01), F-46, RIICO EXTENSION, NOKHA INDUSTRIAL AREA, NOKHA DISTT- BIKANER (RAJASTHAN) - 334803
PH :7412059805.

PADAMPUR

2358. DUDI AUTOMOBILES (A UNIT OF DMAS AUTOMOBILES PVT LTD) (--01), NEAR BASANT PLACE, BHAGAT SINGH CHOWK, KARANPUR ROAD, PADAMPUR SRI GANGANAGAR 335041 - 335041

PALI

2359. L M J SERVICES LTD (6502--03), KHASRA NO. 771/1, JODHPUR PALI ROAD, PALI - 306401
PH :9269971266.

PAOTA

2360. K.P. AUTOMOTIVES PVT LTD (--01), PATTA SANKHYA 31, MISAL SANKHYA 89, NEAR BAMORIA PETROL PUMP, NH-8, PAOTA, RAJASTHAN. - 303106

PARBATSAR

2361. SHRI MANGALAM AUTO PRIVATE LIMITED (--01), NEAR IFL HOUSING FINANCE CO., KISHANGARGH ROAD, PARBATSAR, DISTRICT - NAGAUR, RAJASTHAN - 341512. - 341512
PH :8740909096.

PARTAPUR

2362. NAVNEET MOTORS (--01), AAASHAPURA CHAURAHA, BHAGORA MOR, NEAR AAASHAPURA MANDIR, PARTAPUR ,RAJASATHAN - 327024
PH :9001550644.

PHALODI

2363. SHRI KRISHNA AUTOSALES PVT LTD (--01), OPP. RCP GUEST HOUSE, NAGAUR KHICHAN ROAD, PHALODI, RAJASTHAN - 342301
PH :9116011958.

PHULERA

2364. KTL AUTOMOBILE PRIVATE LIMITED (--01), KHASRA NO. 21 TO 24 AND PLOT NO. 189 IN RAM VIHAR COLONY, PANCHBHATI, PHULERA, DISTRICT - JAIPUR, RAJASTHAN - 303338
PH :7412077022.

2365. KTL AUTOMOBILE PRIVATE LIMITED (--02), KHASRA NO. 21 TO 24 AND PLOT NO. 189, IN RAM VIHAR COLONY - 303338

PILIBANGA

2366. AURIC MOTORS (A UNIT OF AUDI MOTORS PVT LTD) (--01), HANUMANGARH ROAD, PILIBANGA, DISTRICT-HANUMANGARH, RAJASTHAN - 335803

PINDWARA

2367. NAVNEET MOTORS (--01), OPPOSITE WOLKEM FACTORY, SIROHI ROAD, PINDWARA, DIST. - SIROHI. - 307022

PIPAR

2368. L M J SERVICES LTD (--01), KHASRA NO. 1095, PIPAR CITY, DIST.-JODHPUR. - 342601
PH :9462616268.

PIRAWA

2369. BHATIA & COMPANY (A UNIT OF BHATIA CORPORATION PVT LTD) (--01), PLOT NO.19,NEAR KRISHI UPAJ MANDI,SOYAT ROAD,PIRAWA,DIST.JHALAWAR, - 326034

PISANGAN

2370. AJMER AUTO AGENCIES PVT LTD (--01), PLOT NO.11, SHIV VIHAR COLONY, MANGLIYAWAS ROAD, PISANGAN, DISTRICT – AJMER, RAJASTHAN. - 305204
PH :9314955201.

POKHRAN

2371. L M J SERVICES LTD (--01), SUNDER NAGAR, TEHSIL POKHRAN, DISTRICT – JAISALMER, RAJASTHAN. - 345021
PH :9610115660.

PRATAPGARH (RAJASTHAN)

2372. BHATIA & COMPANY (A UNIT OF BHATIA CORPORATION PVT LTD) (--01), CHITTORGARH-PRATAPGARH ROAD, GRAM-BAMBOTARA, PRATAPGARH (RAJASTHAN) - 312605
PH :9571274999.

RAIPUR

2373. L M J SERVICES LTD (--01), NATIONAL HIGHWAY, PALI ROAD, VILLAGE – RAIPUR, DISTRICT – PALI. - 306304
PH :9269971266.

RAISINGHNAGAR

2374. AURIC MOTORS (A UNIT OF AUDI MOTORS PVT LTD) (--01), PLOT NO. H-2, INDUSTRIAL AREA, RAISINGHNAGAR, DISTRICT – SRIGANGANAGAR. - 335051

RAJGARH

2375. M G MOTORS (--01), ALWAR SIKANDRA MEGA HIGHWAY, VILLAGE DIGAWARA, TEHSIL RAJGARH DISTT. ALWAR - 301408
PH :9001795520.

2376. AURIC MOTORS (A UNIT OF AUDI MOTORS PVT LTD) (--01), NH-65, OPP. BHAGAT SINGH CHOWK, RAJGARH DISTT. CHURU, - 331023
PH :9602261977.

RAJSAMAND

2377. TECHNOY MOTORS INDIA PVT LTD (--01), ARAJI NO 241 – 242, DHOINDA, RAJASMAND, RAJASTHAN - 313324

RAMGANJMANDI

2378. BHATIA & COMPANY (A UNIT OF BHATIA CORPORATION PVT LTD) (--01), KHAIRABAD ROAD, KHASARA NO. 753, A.S.I COLONY, RAMGANJ MANDI - 326519
PH :9414085790.

RAMGARH

2379. M G MOTORS (--01), PLOT NO. 8, BALOT NAGAR, OLD DELHI ROAD, RAMGARH, ALWAR, RAJASTHAN - 301026

RANIWARA

2380. SHRI KRISHNA AUTOSALES PVT LTD (--01), NEAR RAILWAY GATE, BHINMAL ROAD ,RANIWARA, TEHSIL – RANIWARA, DISTRICT – JALORE, RAJASTHAN,PIN CODE: 343040 - 343040
PH :9928377669.

RATANGARH

2381. AURIC MOTORS (A UNIT OF AUDI MOTORS PVT LTD) (--01), PLOT NO. AREA F-186 INDUSTRIAL AREA, RATANGARH. - 331022
PH :7412087301.

RAWATBHATA

2382. BHATIA & COMPANY (A UNIT OF BHATIA CORPORATION PVT LTD) (--01), NEAR INDIAN OIL PETROL PUMP, KOTA ROAD, RAWATBHATA , DIST. CHITTORGARH, RAJASTHAN. - 323307

RAWATSAR

2383. AURIC MOTORS (A UNIT OF AUDI MOTORS PVT LTD) (--01), CHAK 21-22,DWD,PLOT NUMBER -10 & 11, RAWATSAR (RAJASTHAN). - 335524

REENGUS

2384. JAMU AUTOMOBILES PVT LTD (--01), REENGUS HIGHWAY , REENGUS DISTT. SIKAR -332404 - 332404
PH :332404.

RENWAL

2385. PREM MOTORS PVT LTD (--01), 193, JAIPUR CHOMU ROAD, NEAR 10 DUKAN, , RENWAL KISHANGARH, JAIPUR, RAJASTHAN - 303904

RENWAL MANJHI

2386. PREM MOTORS PVT LTD (--01), KHASRA NUMBER 2286/110,OPP ROHINI NAGAR 1 ,JAIPUR BHILWARA HIGHWAY ,RENWAL,TEHSIL PHAGI JAIPUR ,RAJASTHAN (303904). - 303904

REVDAR

2387. TECHNOY MOTORS INDIA PVT LTD (--01), OPP. TIRUPATI PETROL PUMP, KAROTI ROAD, REVDAR, DISTT. SIROHI, RAJASTHAN. - 307514

SABLA

2388. TECHNOY MOTORS INDIA PVT LTD (--01), NEAR BP PETROL PUMP, SABLA ASPUR ROAD, SABLA, TEHSIL-ASPUR, DUNGERPUR, PIN-314022, RAJASTHAN - 314022

SAGWARA

2389. TECHNOY MOTORS INDIA PVT LTD (--01), BANSWARA ROAD, CHUNGINAKA, NR. CENTRAL JAIL, SAGWARA, DUNGARPUR DISTT., RAJASTHAN - 314025

SALUMBAR

2390. NAVNEET MOTORS (--01), GANESH GHATI, BANSWARA ROAD, SALUMBAR, DISTRICT – UDAIPUR. - 313027
PH :7665887444.

SAMBHAR

2391. KTL AUTOMOBILE PRIVATE LIMITED (--01), PLOT NUMBER -C1 NEAR SHAKUMARI PG COLLEGE , PHULERA ROAD , SAMBHAR 303604 - 303604
PH :7412077022.

SAMRANIYA

2392. BHATIA & COMPANY (A UNIT OF BHATIA CORPORATION PVT LTD) (--01), KHASRA NO.857/394,GADRETA BYPASS, SANTOSHI NAGAR,SAMRANIYA, - 325217

SANCHORE

2393. SHRI KRISHNA AUTOSALES PVT LTD (--01), PLOT NO. 217, KHASRA NO. 844, 865, 867, MANMOHAN SINGH PARK, NH-15, BARMER ROAD, SANCHORE, DIST.-JALORE. - 343041
PH :9636224546.

SANGARIA

2394. AURIC MOTORS (A UNIT OF AUDI MOTORS PVT LTD) (--01), HANUMANGARH ROAD NEAR KARMA PETROL PUMP - 335035
PH :7412059827.

SANGOD

2395. BHATIA & COMPANY (A UNIT OF BHATIA CORPORATION PVT LTD) (--01), KHASRA NO 1637 , SANGOD BAPAPAR MAIN ROAD ,SANGOD - 325601
PH :9413353999.

SAPOTRA

2396. FORTUNE CARS (A UNIT OF JYOTI AUTOMOBILES PVT LTD) (--01), VPO SAPOTRA, NEAR PETROL PUMP DIST. KARAULI, PIN-322218 - 322218

SARDARSHAHAR

2397. AURIC MOTORS (A UNIT OF AUDI MOTORS PVT LTD) (--01), KHASRA NO.134, MOTOR MARKET, RATANGARH SARDARSHAHAR ROAD, SARDARSHAHAR DISTT. CHURU, RAJASTHAN - 331403
PH :9799833995.

SARWAR

2398. RELAN MOTORS PVT LTD (--01), CHAMAN CHOURAHA, AJMER ROAD, SARWAR, DISTRICT – AJMER, RAJASTHAN 305403 - 305403
PH :9587687000.

SAWAI MADHOPUR

2399. PREM MOTORS PVT LTD (--01), PLOT NO.14, RIICO INDUSTRIAL AREA, KHERDA, SAWAI MADHOPUR - 322001

SAYALA

2400. AURIC MOTORS (A UNIT OF AUDI MOTORS PVT LTD) (--01), NEAR PETROL PUMP, HANUMAN MANDIR SOUTH STYLE, MAIN ROAD SAYALA, SAYALA TEHSIL – SAYALA, DISTRICT – JALORE, RAJASTHAN PIN CODE: 343022 - 343022
PH :9460739993.

SHAHJAHANUR

2401. FORTUNE CARS (A UNIT OF JYOTI AUTOMOBILES PVT LTD) (--01), KHASRA NO. 1258, VPO SHAHJAHANPUR, DELHI-JAIPUR HIGHWAY, DISTRICT –ALWAR, RAJASTHAN - 301706. - 301706

SHAHPURA

2402. K.P. AUTOMOTIVES PVT LTD (1104--05), VILLAGE RAJPURA,GRAM PANCHAYAT BIDARA,NH-8, SHAHPURA - 303103

SHEO

2403. L M J SERVICES LTD (--01), NEAR RIDDI SIDDHI HOTEL , OPPOSITE HP PETROL PUMP ,TEH SHEO, DISTT – BARMER - 335521
PH :8094011144.

SHEOGANJ

2404. NAVNEET MOTORS (--01), F 132 ,OPP. 33/11 KV STATION, RIICO INDUSTRIAL AREA, SHEOGANJ, DISTRICT – SIROHI, RAJASTHAN - 307027 - 307027
PH :9414159146.

SIKAR

2405. JAMU AUTOMOBILES PVT LTD (--01), F-54,,JAIPUR ROAD (NH-11),SIKAR - 332001

SIKRAI

2406. VIPUL MOTORS PVT LTD (--01), OPP NAYARA PETROL PUMP, MANPUR ROAD SIKRAI, DAUSA (RAJASTHAN) - 303508

SIMALWARA

2407. NAVNEET MOTORS (--01), RAJPUR PEETH ROAD, SIMALWARA, DISTRICT - DUNGARPUR, RAJASTHAN - 314403 - 314403

SINGHANA

2408. AURIC MOTORS (A UNIT OF AUDI MOTORS PVT LTD) (--01), NARNAUL ROAD, SINGHANA, DIST. JHUNJHUNU,, PIN-333516, RAJASTHAN - 333516

SIROHI

2409. NAVNEET MOTORS (4902--03), PLOT NO. 8,BHADRANAGAR NAGAR, ANADRA ROAD, SIROHI - 307001
PH :779960989.

SIVANA

2410. L M J SERVICES LTD (--01), BALOTRA ROAD, SIWANA, DISTRICT - JODHPUR, RAJASHTHAN. - 344044
PH :8005898360.

SOJAT

2411. L M J SERVICES LTD (--01), KHASRA NO. – 186/1, NH-8, NEAR ASHOK LEYLAND WORKSHOP, SARDARPURA, SOJAT , RAJASTHAN - 306104
PH :9269971266.

SRI DUNGARGARH

2412. AURIC MOTORS (A UNIT OF AUDI MOTORS PVT LTD) (--01), 1563/1273, NH-11, MOMASAR BASS, DUNGARGARH, DISTRICT - BIKANER, RAJASTHAN. - 331803
PH :9414138511.

SRI GANGANAGAR

2413. AURIC MOTORS (A UNIT OF AUDI MOTORS PVT LTD) (--01), NEW AUTOMOBILE MARKET,SURATGARH-HANUMANGARH ROAD, SRIGANGANAGAR - 335001

2414. AURIC MOTORS (A UNIT OF AUDI MOTORS PVT LTD) (--03), CHAK 1G CHOTI, NH15, SRIGANGANAGAR, RAJASTHAN - 335001
PH :8875911503.

SRI KARANPUR

2415. AURIC MOTORS (A UNIT OF AUDI MOTORS PVT LTD) (--01), PADAMPUR ROAD, NEAR DHAN MANDI, SRI KARANPUR,TEHSIL – SRI KARANPUR, DISTRICT – SRI GANGANAGAR,RAJASTHAN, PIN CODE: 335073
PH :8875088998.

SRI MADHOPUR

2416. JAMU AUTOMOBILES PVT LTD (--01), WARD NO.4, RINGUS ROAD, SRI MADHOPUR DISTT. SIKAR. - 332715
PH :9116816905.

SUJANGARH

2417. AURIC MOTORS (A UNIT OF AUDI MOTORS PVT LTD) (--01), KHASRA NO.459/333, SALASAR ROAD, NEAR ANAJ MANDI, SUJANGARH , DISTT. CHURU - 331507
PH :8875011561.

SULTANPUR

2418. SUWALKA MOTORS PRIVATE LIMITED (--01), KHASRA NUMBER 485, NEAR PETROL PUMP , SULTANPUR ROAD , SULTANPUR , DISTT KOTA - 325204
PH :7742121212.

SUMERPUR

2419. L M J SERVICES LTD (6502--08), G-14 JAKHAMATA INDUSTRIAL AREA, OPP. DASHEREA GROUND, SUMERPUR - 306902
PH :8094002633.

SURATGARH

2420. AURIC MOTORS (A UNIT OF AUDI MOTORS PVT LTD) (--02), OPP. RELIANCE PETROL PUMP,NH-15, SURATGARH - 335804
PH :8875012667.

SWAROOPGANJ

2421. NAVNEET MOTORS (--01), NEAR POLICE STATION, NAYI BHAWARI,, NATIONAL HIGHWAY 27, SWAROOPGANJ, - 307001

THANAGAZI

2422. M G MOTORS (--01), NEAR INDIA PETOL PUMP, THANAGAZI, ALWAR ROAD, DIST. ALWAR, PIN-301022, RAJASTHAN - 301022
PH :9799398200.

TIBBI

2423. AURIC MOTORS (A UNIT OF AUDI MOTORS PVT LTD) (--01), NEAR KESARGARH PALACE, HANUMANGARH ROAD, TIBBI, DIST. HANUMNAGARH, PIN-335526, RAJASTHAN - 335526
PH :9413311745.

TINWARI

2424. L M J SERVICES LTD (--01), OPPOSITE NEW TEHSIL OFFI CE, TIWARI, MATHANIA ROAD, TIWARI -342306 - 342306
PH :809011126.

TODARAISINGH

2425. AURIC MOTORS (A UNIT OF AUDI MOTORS PVT LTD) (--01), JAKHAD COLONY, NEAR ESSAR PETROL PUMP, TODARAISINGH, DIST. – TONK, RAJASTHAN-304505. - 304505

TONK

2426. K.P. AUTOMOTIVES PVT LTD (--01), F-94, RIICO INDUSTRIAL AREA, TONK , RAJASTHAN - 304001
PH :9549651972.

TUNGA

2427. PREM MOTORS PVT LTD (--01), VILLAGE GWALANI, BASSI-LALSOT ROAD, TUNGA, TEHSIL- BASSI, JAIPUR - 303302 - 303302
PH :8058998123.

UDAIPUR

2428. NAVNEET MOTORS (4901-49-01), 7 CITY STATION ROAD,UDAIPUR - 313001
PH :7230046375.

2429. NAVNEET MOTORS (4902-49-01), S-140,MADRI INDUSTRIAL AREA,OPP. BSNL OFFICE, UDAIPUR - 313002

2430. TECHNOY MOTORS INDIA PVT LTD (4903-49-02), NH-8, GOVERDHAN VILLAS, DEVALI, NEAR JEEVAN TARA RESORT, UDAIPUR - 313002
PH :7073468292.

2431. TECHNOY MOTORS INDIA PVT LTD (4903-49-04), KHASRA NO. 546, 547, 554 AND 555, NEAR CHITRAKOOT NAGAR, OPP. BHIRAVGARH HOTEL, SUKHER, TEHSIL – BADGAON, UDAIPUR, RAJASTHAN. - 313001

UDAIPURWATI

2432. AURIC MOTORS PVT LTD (--01), INFRONT OF FRAMA TRACTOR,SIKAR ROAD, POWER HOUSE UDAIPURWATI JHUNJHUNU - 333307

VATIKA

2433. SANGA AUTONATION (A UNIT OF TAYAL INDIA MOTORS PVT LTD) (--01), PLOT NO.3 & 8, VINAYAK VIHAR, VATIKA, SANGANER, JAIPUR, PIN-303905, RAJASTHAN - 303905

VIRATNAGAR

2434. K.P. AUTOMOTIVES PVT LTD (--01), KHASRA NUMBER 1156,,OPP HOTEL GULMOHAR ,,JAIPUR ROAD ,VIRATNAGAR,DISTT JAIPUR - 303102

SIKKIM

GANGTOK

2435. ENTEL MOTORS (--01), 6TH MILE, P.O.TADONG, GANGTOK, SIKKIM - 737102

JORTHANG

2436. ENTEL MOTORS (--01), PIPALEY ROHTAK, NEAR JNU SCHOOL, WEST SIKKIM, JORTHANG - 737121

TAMIL NADU

ALANDURAI

2437. AADHI CARS PVT LTD (--01), NO.69/1 A, SIRUVANI MAIN ROAD, URIPALLAM PUDHUR, ALANDURAI, COIMBATORE (TAMIL NADU) - 641101
PH :8754045816.

ALANGUDI

2438. PL.A MOTORS (--01), S. NO. 400/6-A-2, NO. 1/85, MANGALAPURAM, PUDDUKOTTAI TO ALANGUDI ROAD, NEAR KNP KALYANA MANDAPAM, ALANGUDI TOWN & TALUK, PUDUKKOTTAI DIST., TN - 622301 - 622301
PH :8870454466.

ALANGULAM

2439. AADHI CARS PVT LTD (--01), SURVEY NO. 495/7, TIRUNELVELI - TENKASI ROAD, ALANGULAM, TIRUNELVELI DISTRICT,TN - 627851
PH :8754044143.

AMBASAMUNDRAM (AMBAI)

2440. AADHI CARS PVT LTD (--01), DOOR NO. 2/253, SURVEY NO. 104/2, RTO OFFICE ROAD, VILLAGE - VAGAIKULAM, AMBASAMUNDRAM. - 627401

AMBUR

2441. SRI AMMAN CARS INDIA PVT LTD (--01), 25/2A,25/2B,26/1&26/2, PLOT NO:42,SIDCO INDUSTRIAL ESTATE,VINNAMANGALAM, CHENGILLIKUPPAM VILLAGE, AMBUR TALUK, TIRUPATHUR DIST., TAMILNADU - 631005

ANAMALAI

2442. ABT LIMITED (--01), SITE NO. 6/12, NEAR ABT SAMUGA KOODAM, SETHUMADAI ROAD, ANAMALAI, COIMBATORE DISTRICT, TAMILNADU - 642104
PH :9788174244.

ANDIPATTI

2443. ASIR AUTOMOBILES PVT LTD (--01), SURVEY NO. 459/1A1, THENI MAIN ROAD, ANDIPATTI, THENI DISTRICT,TAMILNADU - 625512

ANJUGRAMAM

2444. ATHEN CARS (--01), 994/6A, VARIYOOR, ANJUGRAMAM, AGASTHEESWARAM TALUK, , - 629401

ANNUR

2445. JAIKRISHNAA AUTOSALES PVT LTD (--01), SF NO.266/1B, OTTRAPALAYAM VILLAGE, OPP. TO KG SCHOOL, ANNUR,COIMBATORE (DIST), TAMILNADU - 641653
PH :9788850733.

ANTHIYUR

2446. SREE SARADHAMBAL AUTOMOBILES PVT LTD (--01), SURVEY NO.495/4, OLD NO.724B, KANCHI THOTTI THOTTAM, BHAVANI MAIN ROAD,ANTHIYUR. - 638501
PH :8754086777.

ARACHALUR

2447. SREE SARADHAMBAL AUTOMOBILES PVT LTD (--01), SF NO: 63/2, DOOR NO: 19, ST-1, NAGARAJAPURAM, KODUMUDI ROAD, ARACHALUR, ERODE DIST., TAMILNADU-638101. - 638101

ARAKKONAM

2448. GANESH CARS PVT LTD (--01), SURVEY NO. 556A/3, VILLAGE – ICHIPUDHUR, TALUKA – ARAKKONAM, VELLORE. - 631003
PH :9842345399.

ARIYALUR

2449. PILLAI & SONS MOTOR COMPANY (--01), NO.1/1 , NEAR ULAVAR SANTHAI, JAYAMKONDAM ROAD, ARIYALUR (TAMIL NADU). - 621704

ARNI

2450. GANESH CARS PVT LTD (--01), DOOR NO. 1151/3, VELLORE MAIN ROAD, OPPOSITE TO HERO MOTORS SHOWROOM, RATNAMANGALAM BUS STOP, ARNI , THIRUVANAMALAI, TAMIL NADU. - 632301
PH :9585553266.

ARUPPUKKOTTAI

2451. ASIR AUTOMOBILES PVT LTD (--01), SURVEY NO. 205/1, 5/5C, NEHRU NAGAR, ARUPPUKKOTTAI TO MADURAI BYPASS ROAD, ARUPPUKKOTTAI, DIST.-VIRUDHUNAGAR. - 626101
PH :9944059911.

ATTUR

2452. S M CAR PVT LTD (--01), SF NO. 351/10A, SALEM TO CHENNAI BY PASS ROAD, APPAMASAMDURAM, ATTUR, SALEM. - 636108
PH :7094440057.

AVADI

2453. VISHNU CARS PVT LTD (--01), SURVEY NO. 146, 147/1F & 147/G, NO. 17 VILLAGE – KAVARAPALAYAM, CTH ROAD, AVADI, DISTRICT – THIRUVALLUR, CHENNAI, TAMIL NADU - 600054

AVINASHI

2454. SHASHTI CAR PRIVATE LIMITED (--01), SURVEY NO. 373/1E, THEEKU THOTTAM, NALLIGOUNDANPALAYAM, PALANGARAI, KUPOUDAMPALAYAM POST, NH ROAD, AVINASHI EAST, TIRUPPUR DISTRICT, TAMILNADU - 641654
PH :9942903319.

BHAVANI

2455. SREE SARADHAMBAL AUTOMOBILES PVT LTD (--05), NO.5/1072, LAKSHMI NAGAR, NH-47, VASAVI COLLEGE (P.O.), BHAVANI, ERODE (DIST), TAMIL NADU. - 638316
PH :9597385777.

CHENGALPETTU

2456. AIE CARS PVT LTD (--01), PLOT NO. 98/1, PULIPAKKAM VILLAGE, CHENGALPETTU, DISTRICT-KACHEEPURAM, TAMIL NADU. - 603002

2457. AIE CARS PVT LTD (--02), DOOR NO. 41, GST ROAD, PULIPAKKAM, CHANGELPET, TAMILNADU - 603202

CHENGAM

2458. GANESH CARS PVT LTD (--01), SURVEY NO. 293/3A, 3A1,VILLAGE - THUKAPETTAI, CHENGAM, DIST.-TIRUVANNAMALAI. - 606701
PH :7397395289.

CHENNAI

2459. ABT LIMITED (1401-14-01), # 355-A, GST ROAD, ALANDUR, CHENNAI, TAMILNADU - 600032
2460. KHIVRAJ MOTORS PVT LTD (1404-14-01), 623 MOUNT ROAD, CHENNAI - 600006
PH :9043014530.
2461. CARS INDIA (CRESCENT AUTO REPAIR & SERVICES INDIA PVT LTD) (1403-14-01), 16 & 17 INDUSTRIAL ESTATE, AMBATTUR, CHENNAI - 600058
PH :9952000089.
2462. CARS INDIA (CRESCENT AUTO REPAIR & SERVICES INDIA PVT LTD) (1403-14-02), NO.17, LATTICE BRIDGE ROAD, ADYAR, CHENNAI - 600020
2463. POPULAR VEHICLES AND SERVICES LIMITED (1410-14-02), OLD NO.155, NEW NO.123, PONRANJITHAM COMPLEX, MEDAVAKKAM MAIN ROAD, NEAR BUS TERMINUS, KEEKATTALAI, CHENNAI - 600117
2464. ABT LIMITED (1401-14-05), A/A2, BHARANI STUDIO COMPLEX, DR. BHANUMATHI KRISHNA ROAD,22, ARCOT ROAD, SALIGRAMMAM, CHENNAI - 600093
2465. CARS INDIA (CRESCENT AUTO REPAIR & SERVICES INDIA PVT LTD) (1403-14-03), 4/321, OLD MAHABALIKPURAM RD. , KOTTIVAKKAM, CHENNAI - 600040
2466. POPULAR VEHICLES AND SERVICES LIMITED (1410-14-01), NEW DOOR NO.256 (OLD DOOR NO. 93), ARCOT ROAD, VIRUGAMBAKKAM, CHENNAI, TAMIL NADU-600092 - 600093
2467. ABT LIMITED (1401-14-07), NO. 422, KOLAPERUMAL SCHOOL STREET, POONMA MALLE HIGH ROAD, CHENNAI - 600106
2468. CRESCO (A UNIT OF NEXGEN VENTURES PVT LTD) (1493-14-01), 5,THIRUMURUGAN ST, KOYAMBEDU, CHENNAI - 600107
PH :7305087055.
2469. ABT LIMITED (1411-14-01), 29, WALLES ROAD, OPP. ALBERT THEATER, EGMORE, AMBATTUR, CHENNAI - 600058
2470. VISHNU CARS PVT LTD (1427-14-02), 176/1, LUZ CHURCH ROAD, NEAR KAMADHENU THEATRE MYLAPORE, CHENNAI - 600004
2471. VISHNU CARS PVT LTD (1427-14-01), NO. 91, GST ROAD, ALWITONE ESTATE, BEHIND LAXMI THEATRE, PALLAVARAM, CHENNAI - 600043
2472. POPULAR VEHICLES AND SERVICES LIMITED (1410-14-03), NO. 3, 200 RING ROAD, RETTERI JUNCTION, RETTERI , CHENNAI - 600099
2473. CARS INDIA (CRESCENT AUTO REPAIR & SERVICES INDIA PVT LTD) (1403-14-05), PLOT NO.- 80, BABU JAGAGEVAN RAM STREET, GERUGAMBAKKAM, CHENNAI - 600112
PH :9952000079.
2474. KHIVRAJ MOTORS PVT LTD (1404-14-03), SURVEY NO. A1& A2, SIDCO INDUSTRIAL ESTATE, GUINDY, CHENNAI - 600032
PH :7299971978.
2475. ABT LIMITED (1401-14-0D), NO.2/170, ECR ROAD, INJAMBAKKAM, CHENNAI TAMIL NADU. - 600041
2476. AIE CARS PVT LTD (1496--01), PLOT NO.1,2,3 & 4, SURVEY NO.91/2, B1, A2 & B, NEELANKARAI, EAST COAST ROAD, CHENNAI - 600115
2477. RAJALAKSHMI CARS PVT LTD (1486--01), OLD DOOR NO.69, NEW DOOR NO.20,GRAND NELLORE TRUNK ROAD, MADHAVARAM, CHENNAI . - 600060
2478. KHIVRAJ MOTORS PVT LTD (1480--02), PLOT NO.119 & 120, ELECTRICAL & ELECTRONICS INDUSTRIAL ESTATE, PERUNGUDI, CHENNAI - 600096
2479. ABT LIMITED (1401--0E), NO. 1/132, RAJEEV GANDHI SALAI, SHOLINGANALLUR, DISTRICT – CHENNAI, TAMIL NADU. - 600119
2480. VISHNU CARS PVT LTD (1427-14-03), 4/13 LOYAL GARDEN, KALAHATHAMMAN KOVIL STREET, RAMAPURAM, CHENNAI, TAMIL NADU. - 600089
2481. VISHNU CARS PVT LTD (1487-14-01), NO.203 TO 206 MOUNT POONAMALLE ROAD, KATTUPAKKAM, CHENNAI - 600056
PH :9677127432.
2482. VISHNU CARS PVT LTD (1487-14-02), NO.120, MAMBAKKAM MAIN ROAD, MEDAVAKKAM, CHENNAI - 600100
2483. VISHNU CARS PVT LTD (1427-14-04), NEW S. NO. 314/1B1A, PALLAVARAM – THORAIPAKKAM RADIAL ROAD, NEAR OLD CHETTINADU CEMENT GOWDOWN, KEELAKATTALAI, CHENNAI. - 600117
PH :9940057775.
2484. VISHNU CARS PVT LTD (1427--06), PLOT NO. 4, MORISON 4 STREET, ALANDUR, CHENNAI. - 600016
2485. RAJALAKSHMI CARS PVT LTD (1486--02), OLD NO. 27, NEW NO. 22A, ALAPAKKAM MAIN ROAD, MADURAVOYAL, CHENNAI. - 600095
2486. CRESCO (A UNIT OF NEXGEN VENTURES PVT LTD) (1493--03), PLOT NO. G30, 3RD MAIN ROAD, 9TH STREET, AMBATTUR INDUSTRIAL ESTATE, DIAGONALLY TO TELEPHONE EXCHANGE, CHENNAI. - 600058
PH :7305087033.
2487. POPULAR VEHICLES AND SERVICES LIMITED (--06), PLOT NO. 10, NEW SURVEY NO. 88/1A1, 88/1C, 88/1B & 88/2B, NOOMBAL MAIN ROAD, VANAKARAM, CHENNAI. - 600077
2488. AIE CARS PVT LTD (1496-14-02), PLOT NO. L-1 SIDCO INDUSTRIAL ESTATE, VILLIVAKKAM, CHENNAI, TAMIL NADU. - 600049
2489. VISHNU CARS PVT LTD (1427-14-07), SURVEY NO. 19/1A2, 83/18, DOOR NO. 113, NEAR PARIMALAM THEATER, KUNDRATHUR MAIN ROAD, MANNADY THALAI, NALLUR, SAMBA THALAI, MOONRAMKATTALAI VILLAGE, ONDI COLONY, KUNDRATHUR, CHENNAI. - 600069
2490. VISHNU CARS PVT LTD (-14-08), SURVEY NO. 62/2B, DOOR NO. 1/63, AGARAM MAIN ROAD, THIRUVANCHERRY VILLAGE, TAMBARAM TALUK, SELAIYUR, KANCHIPURAM DIST., CHENNAI , TAMIL NADU. - 600073
PH :8056260022.
2491. ABT LIMITED (1401-14-10), S. NO: 32/2, NANDAMBAKKAM, PADMINI GARDEN, CHENNAI - 600089, TN.. - 600089
2492. VISHNU CARS PVT LTD (1488-14-01), DOOR NO. 8, NP INDUSTRIAL ESTATE, JAWAHARLAL NEHRU ROAD, EKKATUTHANGAL, CHENNAI,TN - 600032
PH :7550360444.
2493. KHIVRAJ MOTORS PVT LTD (1404-14-G1), SURVEY NO:76/A, NO:27, PLOT NO. D-2, KEELAKOTTAYUR, VANDALUR TO KELAMBAKKAM MAIN ROAD, MAMBAKKAM, CHENGALPET, CHENNAI,TN - 600127
PH :9841591558.
2494. POPULAR VEHICLES AND SERVICES LIMITED (1410-14-G1), SURVEY NO: 18/1B2A1A, NAZARATHPET VILLAGE, POONAMALLE, CHENNAI,TAMIL NADU- 600123 - 600123
PH :7994449644.
2495. ABT LIMITED (1401-14-11), OLD SURVEY NO: 84/1A & 85/1A, NEW TOWN SURVEY NO:1, RACE COURSE ROAD, GUINDY, CHENNAI, TAMILNADU - 600032
PH :9994437421.
2496. CRESCO (A UNIT OF NEXGEN VENTURES PVT LTD) (-14-05), NO. 273,(OLD NO.191), TAMBARAM- VELACHERY MAIN ROAD, NARAYANAPURAM, PALLIKARANI, CHENNAI,TN - 600100
2497. POPULAR VEHICLES AND SERVICES LIMITED (1410--07), NEW S.NO:2/7B,3/2A3B,3/7B & 4/8B (OLD S. NO:2/1B, 3/2,3/3B, 4/4) ,SEMBIUM- RED HILLS ROAD, NEAR AMBEDKAR STATUE, KATHIRVEDU, AAMBATTUR TALUK, THIRUVALLUR DIST., CHENNAI, TN-600066 - 600066

2498. INDUS MOTOR COMPANY PRIVATE LIMITED (1495-14-01), 51/1A,DOOR NO:6, NEARBY CHENNAI TRADE CENTRE, MOUNT POONAMALLE ROAD, NANDAMBAKKAM, CHENNAI, TAMILNADU-600089. - 600089
2499. CARS INDIA (CRESCENT AUTO REPAIR & SERVICES INDIA PVT LTD) (--01), NO:503/1, GNT ROAD, THANDALKAZHANI, PUZHAL, REDHILLS, CHENNAI, TN-600066 - 600066
2500. ABT LIMITED (1401-14-12), SURVEY NO # NO: 27, VELACHERRY MAIN ROAD, RAM NAGAR NORTH, MADIPAKKAM, CHENNAI, TAMILNADU-600091 - 600091
2501. AIE CARS PVT LTD (1496-14-03), SURVEY NO: 160/2A,160/1C, 160/2A1 A2 &160/2B2, KRISHNA NAGAR, MUDICHUR ROAD, WEST TAMBARAM, TAMBARAM TALUK, CHENGALPET DISTRICT, CHENNAI, TAMILNADU-600045. - 600045
2502. VISHNU CARS PVT LTD (1427-14-09), SURVEY NO:44/1,44/1B1A &44/1A1A, RAJESH NAGAR, IRUMBULIYUR VILLAGE, SERVICE ROAD-MADURAVOYIL BYPASS, WEST TAMBARAM, CHENNAI, TAMILNADU - 600045
2503. CRESCO (A UNIT OF NEXGEN VENTURES PVT LTD) (1493-14-06), G-17, 1ST MAIN ROAD, AMBATTUR INDUSTRIAL ESTATE, CHENNAI, TAMILNADU-600058 - 600058

CHETPET

2504. GANESH CARS PVT LTD (--01), DOOR NO: 35/C, CHETPET TOWN, CHETPET TALUKA, TIRUVANNAMALAI DIST.,TAMILNADU, - 606801

CHEYYAR

2505. GANESH CARS PVT LTD (--01), NO.16, KANCHEEPURAM ROAD, CHEYYAR, TIRUVANNAMALAI DISTT. - 604407
PH :9787669339.

CHIDAMBARAM

2506. VISHNU CARS PVT LTD (--01), SURVEY NO. 102/2 & 102/5, BHUVANAGIRI MAIN ROAD, KEERAPALAYAM, CHIDAMBARAM TOWN, CUDDALORE, TAMIL NADU. - 608602

CHINNAMANUR

2507. ABT LIMITED (--01), SF NO. 446 /1A, WARD A, BLOCK-2, TS NO.8/15, PERIYAKULAM TO CHINNAMANUR MAIN ROAD,KEELAPOOLANANDHAPURAM, CHINNAMANUR MUNICIPAL TOWN & TALUK, THENI DIST.,TN- 625515 - 625515
PH :9715863213.

COIMBATORE

2508. ABT LIMITED (4101-41-06), 744, PULIYAKULAM ROAD, P.N. PALAYAM, COIMBATORE - 641037
PH :9944400987.
2509. SREE SARADHAMBAL AUTOMOBILES PVT LTD (4103-41-01), IYER HOSPITAL PREMISES, TRICHY ROAD, COIMBATORE - 641005
PH :8220862666.
2510. ABT LIMITED (4101-41-05), LAKSHMI THEATRE BUILDING, T.S. NO. 1199/2, TS WARD NO. 3, KEMPATTY COLONY, SOUTH UKKADAM, COIMBATORE - 641001
2511. SREE SARADHAMBAL AUTOMOBILES PVT LTD (4103-41-03), 555, NSR ROAD, SAIBABA COLONY, COIMBATORE - 641011
PH :9047055667.
2512. ABT LIMITED (4101-41-08), 15/55-C, ALAGESAN ROAD (EAST), METTUPALAYAM ROAD, COIMBATORE - 641043
2513. JAIKRISHNAA AUTOSALES PVT LTD (4107-41-01), 8/60-C&8/62-D, METTUPALAYAM ROAD, G.N.MILLS POST , NEARJOHNBOSCO CHURCH,COIMBATORE - 641029
2514. SREE SARADHAMBAL AUTOMOBILES PVT LTD (4103-41-07), NO 44, KANNUSAMY GOUNDER STREET, OORGOUNDER THOTTAM, SANGANUR, COIMBATORE - 641027
PH :9655219900.
2515. SREE SARADHAMBAL AUTOMOBILES PVT LTD (4103-41-08), SF-94, SATHY MAIN ROAD, VISWASAPURAM, SARAVANNAMPATTI, COIMBATORE, - 641013
PH :9585877775.
2516. JAIKRISHNAA AUTOSALES PVT LTD (4107-41-02), DOOR NO. 48, KAMARAJAR ROAD, LAKSHMIPURAM, PEELAMEDU, COIMBATORE, TAMIL NADU - 641004
2517. SREE SARADHAMBAL AUTOMOBILES PVT LTD (4103-41-0D), 98/1 VILANKURICHI MAIN ROAD, THANEER PANDAL ROAD, COIMBATORE - 641004
PH :9655345775.
2518. AADHI CARS PVT LTD (4108--01), SURVEY NO.469/2,DOOR NO: 46-2,SATHY MAIN ROAD, RAMAKRISHNAPURAM, GANAPATHY, COIMBATORE - 641035
2519. ABT LIMITED (4101-41-0D), 36-A GANDHI NAGAR, SUNDARAPURAM, COIMBATORE (DIST) COIMBATORE - 641024
2520. AADHI CARS PVT LTD (4108--02), NEAR KOVAI MEDICAL CENTRE & HOSPITAL, AVINASHI ROAD, CIVIL AERODROME POST, CHINNIYAMPALAYAM, COIMBATORE - 641004
2521. AADHI CARS PVT LTD (4108-41-03), NO.71, OLD SRIRAM THEATRE COMPLEX, MARUDHA MALAI MAIN ROAD, VADAVALLI, COIMBATORE - 641041
2522. AADHI CARS PVT LTD (4108-41-04), PLOT NO.295, RADHA RANI THEATER COMPLEX, NEAR JAYASHANTHI THEATER, TRICHY ROAD, ONDIPUDUR, COIMBATORE-. - 641005
2523. SREE SARADHAMBAL AUTOMOBILES PVT LTD (4103--0E), PLOT NO. 210, PALAKAD ROAD, BK PUDUR, COIMBATORE, TAMIL NADU. - 641008
2524. AADHI CARS PVT LTD (4108-41-06), SF NO. 14/78-A, RENUKA SHELTERS, VILANKURICHI MAIN ROAD, KALAPATTI, COIMBATORE, TAMIL NADU-641048. - 641006
PH :8754045840.
2525. SREE SARADHAMBAL AUTOMOBILES PVT LTD (4103--11), PLOT NO. 1, RAJA STREET, KALLIMADAI, NANJAPPA NAGAR, COIMBATORE, TAMIL NADU - 641005
PH :9344870035.
2526. AADHI CARS PVT LTD (4108-41-07), SF NO: 404/1, VAIKALPALAM, PERUR MAIN ROAD, PERUR, COIMBATORE,TAMILNADU-641010 - 641010
2527. ABT LIMITED (4101-41-12), D.NO 13/7-I THONDAMUTHUR ROAD, BOMMANAPALAYAM, PN PUDUR - 641041
2528. SREE SARADHAMBAL AUTOMOBILES PVT LTD (4103-41-12), 313/1H1, KARASAKADU THOTTAM, GANESH NAGA MALLUMICHAMPATTI, POLLACHI MAIN ROAD - 641001

COONOOR

2529. SREE SARADHAMBAL AUTOMOBILES PVT LTD (--01), 78 E, BRINDAVAN SCHOOL ROAD, CONOOR, NILGRIS DIST- TN - 643102

CUDDALORE

2530. ABT LIMITED (--01), K. V. SUBRAMANIAM NAGAR, CHIDAMBARAM MAIN ROAD, CUDDALORE O. T - 607003
2531. VISHNU CARS PVT LTD (--01), SURVEY NO. 35/8, 35/8A, 35/21, 35/6, 35/6A1A, 35/20, VILLAGE - PERIYA KANANGAKUPPAM, CUDDALORE - 607001
PH :7338884131.

CUMBUM

2532. MEENAKSHI AUTO ZONE PVT LTD (--01), PATTA NO. 4388, SURVEY NO. 1003/2 & 1003, VILLAGE - UTHAMAPURAM, SUB DIST.-CUMBUM, TAMIL NADU. - 625516
PH :9940094881.

DENKANIKOTTAI

2533. SRI AMMAN CARS INDIA PVT LTD (--01), SURVEY NO:766/ 1B11, THABILAGOUNDAN THOTTI, DENKANIKOTTAI , KRISHNAGIRI DISTRICT, TAMILNADU - 635107
PH :9585599935.

DEVAKOTTAI

2534. SIVA AUTOMOTIVE TRADING PVT LTD (--01), SURVEY NO. 5/1A, MULL IGUNDU (SOMANENTHAL VILLAGE), DEVAKOTTAI TALUK, SIVAGANGAI DISTRICT,TAMILNADU - 630303
PH :7094688870.

DHARAPURAM

2535. SREE SARADHAMBAL AUTOMOBILES PVT LTD (--04), OPP. TO ANJANEYAR TEMPLE, NEAR FIVE CORNER, MADURAI ROAD, DHARAPURAM - 638656
PH :9597550777.
2536. SREE SARADHAMBAL AUTOMOBILES PVT LTD (--01), SF 134/4A3, DINDIGUL BYPASS ROAD, NEAR INDIAN OIL PETROL PUMP, DHARAPURAM TOWN AND TALUKA, TIRUPPUR DIST,, TAMILNADU-638656 - 638656
PH :9787853000.

DHARMAPURI

2537. SRI AMMAN CARS INDIA PVT LTD (--02), NEAR COLLECTOR BUNGALOW, OLD HOSUR ROAD, JETTIHALLI (PO), DHARMAPURI , TAMILNADU - 636807

DINDIGUL

2538. PL.A. MOTORS FIRM (--01), NO. 5, TRICHY MADURAI BY PASS ROAD, NH-45, DINDIGUL - 624001
PH :7010075200.

EDAYARPALAYAM, COIMBATORE

2539. SREE SARADHAMBAL AUTOMOBILES PVT LTD (--01), SITE NO. 2, SY. NO. 404/1A1, THADAGAM ROAD, TVS NAGAR, EDAYARPALAYAM, COIMBATORE. - 641025
PH :9047081914.

ERODE

2540. SREE SARADHAMBAL AUTOMOBILES PVT LTD (--01), 23/1, PERUND, URAI ROAD, ERODE, - 638011
PH :9677987777.
2541. SREE SARADHAMBAL AUTOMOBILES PVT LTD (--06), SURVEY NO. 1363/3, 1363/5, 1363/6, BEHIND MANIKAVASAKAR COLONY BUS STOP, OPPOSITE TO CANARA BANK, KARUR BYPASS ROAD, SOLAR, ERODE. - 638002
PH :6385805777.
2542. SRI CITY AUTO (A UNIT OF CITY AUTO PVT LTD) (--01), OLD G.S. NO. 337 (1 TO 4), RS NO. 259/11A,10,9,8,, SATHY ROAD, PERIYA SEMUR VILLAGE, ERODE,TAMILNADU - 638003
PH :9171791991.
2543. SREE SARADHAMBAL AUTOMOBILES PVT LTD (--08), RF. NO. 17/1, 2, CAVERI ROAD, KARUNGALPALAYAM, ERODE ,TAMILNADU - 638003
PH :8098825000.
2544. SREE SARADHAMBAL AUTOMOBILES PVT LTD (--09), SF:N0:245, KANDHAIYAN THOTTAM, SOOLAI, SATHY ROAD, VEERAPPANCHATTIRAM, ERODE, TAMILNADU - 638004
PH :9655240486.

2545. SRI CITY AUTO (A UNIT OF CITY AUTO PVT LTD) (--02), R.S. NO:1098/3, VINAYAGAR KOVIL STREET, TELEPHONE NAGAR, POONDURAI MAIN ROAD, ,ERODE, TAMILNADU - 638002
PH :9626671444.

GANGAVALI

2546. THRIVENI CAR COMPANY PVT LTD (--01), SURVEY NO # SF NO. 22/3A1A,106 ATTUR MAIN ROAD,GANGAVALLI,SALEM, TN - 636105
PH :9159722999.

GOPICHETTIPALAYAM

2547. SREE SARADHAMBAL AUTOMOBILES PVT LTD (--03), NO. 318, CUTCHERY, GOBICHETTIPALAYAM - 638476
PH :9597560777.

GUDALUR

2548. SREE SARADHAMBAL AUTOMOBILES PVT LTD (--01), 12/294 B6- B9, SURVEY NO:297/3A, SULTHAN BATHERY- DEVARSHOLA- GUDALUR ROAD, GUDALUR, NILGIRIS, TN- 643212 - 643212

GUDIMANGALAM

2549. SREE SARADHAMBAL AUTOMOBILES PVT LTD (--01), SURVEY NO 347 7 347/1, GUDIMANGALAM, TAMIL NADU - 642201

GUDIYATHAM

2550. GANESH CARS PVT LTD (--01), SURVEY NO.250/1, NEAR NH-75, GANDHI NAGAR, SETHUVADAI, GUDIYATTAM. - 653803

GUDUVANCHERY

2551. VISHNU CARS PVT LTD (--01), 52, THAILAVARAM VILLAGE, BEHIND HOTEL PATTIKADU, GUDUVANCHERRY, KANCHEEPURAM DISTT. - 603203

GUMMIDIPOONDI

2552. RAJALAKSHMI CARS PVT LTD (--01), PLOT NO. F-13, SURVEY NO. 262/2, SIPCOT INDUSTRIAL COMPLEX, VILLAGE – PAPPANAKUPPAM, GUMMIDIPONNDI, THIRUVALLUR - 601201

HARUR

2553. SRI AMMAN CARS INDIA PVT LTD (--01), 429/9, HARUR SALEM MAIN ROAD, HARUR POST, DHARMAPURI, TAMIL NADU - 636903

HOSUR

2554. SRI AMMAN CARS INDIA PVT LTD (--01), P.O.- PERANDAPALLI,NH-7, KRISHNAGIRI MAIN ROAD, HOSUR, TAMILNADU - 635109

IDAPPADI

2555. THRIVENI CAR COMPANY PVT LTD (--01), SURVEY NO.330/3B1B, AVANI PERUR KILMUGAM VILLAGE, IDAPPADI DISTT. SALEM - 637101
PH :9003311488.

KALLAKURCHI

2556. ABT LIMITED (--01), SURVEY NO. 215/4,NEAR AKT SCHOOL, DURUGAM ROAD, NEAR DOORDARSHAN BLDG, NEELAMANGALAM VILLAGE., KALLAKURICHI TALUK & DIST., TAMILNADU - 606202
PH :9047514890.

2557. S M CAR PVT LTD (--01), SF: 31/3B, NO. 19 EMAPPER VILLAGE, KALLAKURICHI, TAMILNADU - 606213
PH :7094440010.

KANCHEEPURAM

2558. GANESH CARS PVT LTD (--02), ANBU NAGAR, DHIMMA SAMUDRAM POST, NEAR VELLA GATE, CHENNAI BANGALORE NH-4, KANCHEEPURAM - 631502
PH :9842306061.

KANGAYAM

2559. SREE SARADHAMBAL AUTOMOBILES PVT LTD (--01), NO. 407/263, TIRUPPUR ROAD, KANGAYAM TALUK & TOWN, TIRUPPUR DIST. ,TAMIL NADU. - 638701
PH :7708531777.

KARAIKUDI

2560. ABT LIMITED (4202--05), 42-43 KOVILOOR ROAD, OPP. TNSTC DEPOT - 630302

2561. SIVA AUTOMOTIVE TRADING PVT LTD (--01), NO. 73, SUBRAMANIYAPURAM 9TH STREET, COLLEGE ROAD, KARAIKUDI, SIVAGANGA DIST, TAMILNADU-630002 - 630002
PH :7402710000.

KARUMATHAMPATTI

2562. SREE SARADHAMBAL AUTOMOBILES PVT LTD (--01), SF: NO.281/B, NEAR BHARAT PETROL BUNK, VILLAGE - VAGUTHANKADU, SOMANUR ROAD, KARUMATHAMPATTI TOWN, TALUK-PALLADAM, DISTT. COIMBATORE. - 641659
PH :9159210008.

KARUNGAL

2563. ATHEN CARS (--01), SURVEY NO. 639/5, KARUNGAL TOWN, VILAVANCODE TALUK, KANYAKUMARI DISTRICT, TAMILNADU - 629157
PH :7094434179.

KARUR

2564. ABT LIMITED (--01), SF NO. 529/1, SALEM BY PASS,ROAD, VENGAMEDU CIRCLE, SEMMADAI - 639002

KATPADI

2565. GANESH CARS PVT LTD (--04), 170/2B THIRUVALLAM ROAD, ARUMPARUTHI VILLAGE, KATPADI, VELLORE DISTT. - 632004
PH :9842313139.

KATTUMANNARKOIL

2566. VISHNU CARS PVT LTD (--01), SURVEY NO. 6& 7, PERIYAKULAM VADA KARAI, OPP TO GNANAVINAYAGAR KOIL, KATTUMANNARKOIL TOWN AND TALUK, CUDDALORE DIST., TAMILNADU - 608301
PH :7358004555.

KAWALKINARU

2567. AADHI CARS PVT LTD (--01), SURVEY NO:1943/1, SURESH COMPLEX, KANYAKUMARI BYEPASS ROAD, KAVALKINARU JUNCTION, KAVALKINARU (VADAKANKULAM), TIRUNELVELI, - 627105
PH :7339111259.

KELAMBAKKAM

2568. CRESCO (A UNIT OF NEXGEN VENTURES PVT LTD) (--01), AGP MAHAAL, SURVEY NO.43, OMR, 60 FEET VEERANAM HIGH ROAD, PADUR, KELAMBAKKAM, CHENGALPATTU DISTRICT, TAMIL NADU - 603103
PH :7305087002.

KINATHUKADAVU

2569. AADHI CARS PVT LTD (--01), NO.212, KAMARAJ NAGAR, SOLAVALAM PALAYAM PANJAAYATH, KINATHUKADAVU DISTT. COIMBATORE (T.N.) - 642109

KODUMUDI

2570. SREE SARADHAMBAL AUTOMOBILES PVT LTD (--01), SURVEY NO.548/A, KARUR MAIN ROAD, NEAR BUS STAND, KODUMUDI. - 638151
PH :8754756777.

KOTAGIRI

2571. AADHI CARS PVT LTD (--01), SURVEY NO.89/79, OOTY MAIN ROAD, KOTAGIRI, DISTT. NILGIRIS, TAMIL NADU. - 643217

KOVILPATTI

2572. ASIR AUTOMOBILES PVT LTD (--01), OLD NO.1, NEW NO.13, SATTUR MAIN ROAD, KOVILPATTI (TAMIL NADU) - 628501

KRISHNAGIRI

2573. SRI AMMAN CARS INDIA PVT LTD (--03), NH-7,NR. AAVIN DAIRY,MOTTUR,SALEM BYE PASS ROAD, KRISHNAGIRI, TAMILNADU - 635001

KULASEKHARAM

2574. ATHEN CARS (--01), ITE NO : 409/17A – ARANIVILAI, NEAR RANGE OFFICE, CONVENT ROAD – KULASEKARAM, KALKULAM –TALUK,KANIYAKUMARI DIST. TN - 629161
PH :7094471569.

KUMBAKONAM

2575. PILLAI & SONS MOTOR COMPANY (--02), 369/2 B, KUMBAKONAM CHENNAI MAIN ROAD, KUMBAKONAM , TANJAVUR - 612501

2576. PILLAI & SONS MOTOR COMPANY (--06), D. NO. HP-1, GOVT. INDUSTRIAL ESTATE, SIDCO, THIRUBHUVANAM TOWN & POST, KUMBAKONAM, THANJAVUR DISTRICT, TAMILNADU - 612103
PH :8489900136.

2577. PL A MOTORS (--01), 139/2, 139/3, VELAPETTAI AGRAHARAM, CHENNAI BYPASS ROAD, KUMBAKONAM - 612501

LALGUDI

2578. PILLAI & SONS MOTOR COMPANY (--01), SURVEY 98/4, ANGARAI VILLAGE, LALGUDI TALUK, TIRUCHIRRAPALLI VILLAGE,LALGUDI,TAMIL NADU - 621601

MADATHUKULAM

2579. ABT LIMITED (--01), SF NO:143/A2D, 143/A2B, NO-88,SY. NO. NH 209, NEAR UNION OFFICE, AGRAHARAKKANNADIPUTHUR VILLAGE,UDUMALAI MAIN ROAD, MADATHUKULAM, TIRUPPUR DIST,TN - 642113

MADURAI

2580. ABT LIMITED (4202--02), MADURAI-DINDIGAL BYE PASS ROAD,NEAR FATHIMA COLLEGE,MADURAI - 625018

2581. ABT LIMITED (4202-42-04), 09, 109A, GST ROAD, TIRUPARANKUNDRAM, MADURAI - 625005
PH :9600966164.

2582. SIVA AUTOMOTIVE TRADING PVT LTD (4205--01), 2C, GATE LOCK ROAD, NEAR NEW RAMNAD ROAD, MADURAI - 625016
PH :7402780000.

2583. ASIR AUTOMOBILES PVT LTD (4206--01), 9, CHAMBAKULAM, MELUR MAIN ROAD, MATTUTHAVANI, MADURAI, TAMIL NADU - 625007
PH :9944059911.

2584. SIVA AUTOMOTIVE TRADING PVT LTD (4205--02), NO. 6-A, TPK ROAD, NEAR SAIBABA TEMPLE, ANDALPURAM, MADURAI. - 625003

2585. MEENAKSHI AUTO ZONE PVT LTD (4207--01), PLOT NO. 25 D, SIDCO INDUSTRIAL ESTATE, KAPPALUR, MADURAI, TAMIL NADU. - 625008
PH :9442799581.

2586. MEENAKSHI AUTO ZONE PVT LTD (4207-42-02), SURVEY NO. 238/2A, PLOT NO. 36, 37, 38, TALLAKULAM VILLAGE, SIVAGAMI NAGAR, NATHAM MAIN ROAD, MADURAI - 652014
PH :9940224881.

2587. SIVA AUTOMOTIVE TRADING PVT LTD (4205-42-03), PATA NO. 615, SURVEY NO. 32/2, 32/4, THENI MAIN ROAD, ACHAMPATHU, MADURAI, TN - 625019
PH :7402738888.

MADURANTHAKAM

2588. AIE CARS PVT LTD (--01), SURVEY NO. 38/3 A2B, NH-45, MADURANTHAKAM, KANCHIPURAM. - 603306

MALLASAMUDRAM

2589. SREE SARADHAMBAL AUTOMOBILES PVT LTD (--01), SF NO. 194/3C, MALLASAMUDRAM MAIN ROAD, MALLASAMUDRAM TOWN, TIRUCHENGODE TALUK, NAMAKKAL DIST., TAMIL NADU. - 637503
PH :9894932019.

MALLUR

2590. THRIVENI CAR COMPANY PVT LTD (--01), SURVEY NO.50/4A, AMANI AMMAPALAYAM VILLAGE, DISTT.: DADHAGAPATTY SUB REGISTRATION , MALLUR DISTT. SALEM - 636309

MANAMADURAI

2591. ABT LIMITED (--01), NO. 35, OLD RAMNAD ROAD, MANAMADURAI TOWN, DISTRICT – SIVGANGAI. - 630606
PH :9994450331.

MANAPPARAI

2592. PILLAI & SONS MOTOR COMPANY (--01), PLOT NO.262, TRICHY DINDIGUL BYPASS ROAD, VENGAIKURUCHI VILLAGE,MANAPPARAI, TRICHY,TN - 621307
PH :8489900908.

MANGALAPURAM

2593. SREE SARADHAMBAL AUTOMOBILES PVT LTD (--01), DOOR NO. 1/518, SURVEY NO. 75/1, ATTUR MAIN ROAD, MANGALAPURAM (POST), TALUK – RASIPURAM, DISTRICT – NAMAKKAL. - 636202
PH :7094447871.

MANNARGUDI

2594. PILLAI & SONS MOTOR COMPANY (--01), NO. 37, THIRUTHURAIPOONDI ROAD, MANNARGUDI, THIRUVARUR DISTRICT, TAMIL NADU. - 614001
PH :7094411675.

MAYILADUTHURAI

2595. PILLAI & SONS MOTOR COMPANY (--04), 46,VELLALAGARAM VILLAGE, MAYILADUTHURAI, TAMILNADU - 609007

MECHERI

2596. S M CAR PVT LTD (--01), SURVEY NO. 139A/5, PATTA NO. 653, AMANI M.KALIPATTY VILLAGE, MECHERI TOWN, METTUR TALUK, SALEMN DIST., TAMIL NADU. - 636453
PH :7094440010.

MELUR

2597. SIVA AUTOMOTIVE TRADING PVT LTD (--01), OLD SN. 138/1, SURVEY WARD C, BLOCK NO. 1, T.S. NO. 21/7, VILLAGE AND TOWN – MELUR, MELUR , DIST.-MADURAI. - 625109
PH :8098120000.

METTUPALAYAM

2598. ABT LIMITED (4101--0C), PLOT NO. 6 TO 9,PONVIZHA NAGAR, KARAMADAI KOVAI MAIN ROAD, METTUPALAYAM - 641043

METTUR

2599. THRIVENI CAR COMPANY PVT LTD (--01), S.F. NO. 73/7A3C, METTUR TO BHAVANI ROAD, NEAR NATAMANGALAM BUS STOP, MADHAIYANKUTTAI (PO), METTUR TALUK, SALEM, TAMILNADU - 636452
PH :9159566999.

MINJUR

2600. RAJALAKSHMI CARS PVT LTD (--01), PLOT NO. 27, SRI JANAKI RATHINA NAGAR, VILLAGE AND TOWN – MINJUR, PONNERI – 601 203, DISTRICT – THIRUVALUR. - 601203

NAGAPATTINAM

2601. PILLAI & SONS MOTOR COMPANY (--01), NO.181, KEELA ANTHANAPETTAI, ANTHANAPETTAI, P.O. - MANJAKOLLAI, PUTHUR, NAGAPATTINAM DISTT. TAMIL NADU - 611106
PH :4365220250.

NAGERCOIL

2602. ATHEN CARS (--01), RESURVEY NO. G.3/9-7, BUILDING NO. 254-A/3 & 4 K.P ROAD ,PARAVATHIPURAM, NAGERCOIL ,KANYAKUMARI DISTRICT TAMILNADU - 629003
PH :8012029777.

2603. ATHEN CARS (--02), SURVEY NO. 54/1,2,4,6 & 11 KOTHAIGRAMAM OZHUGINASERY, THERAKALPUTHUR VILLAGE, NAGERCOIL, KANYAKUMARI DISTRICT, TN-629001 - 629001

2604. AADHI CARS PVT LTD (--05), PLOT NO. 14, INDUSTRIAL ESTATE, KONAM, NAGERCOIL, PIN-629004 - 629003

NAMAKKAL

2605. SREE SARADHAMBAL AUTOMOBILES PVT LTD (--01), SURVEY NO. 1/10-11, NEAR MURUGAN TEMPLE, SALEM ROAD, NAMAKKAL - 637001
PH :937164888.

2606. SREE SARADHAMBAL AUTOMOBILES PVT LTD (--03), 1/412/1 NEAR PON NAGAR, MUDALAIPATTY, SALEM ROAD, NH-7, NAMAKKAL (TAMIL NADU) - 637001
PH :737192888.

NANGUNERI

2607. AADHI CARS PVT LTD (--01), DOOR NO: 38 / 1, BHASKAR NAGAR, THAMBUPURAM, NANGUNERI, TIRUNELVELI DISTRICT. PIN: 627108 - 627108

NATRAMPALLI

2608. GANESH CARS PVT LTD (--01), NO:8/12-1, NEAR ARJUNA SULOCHANA MAHAL, BENGALURU-CHENNAI MAIN ROAD,VELAKALNATHAM, NATRAMPALLI, TIRUPATTUR DIST. TAMIL NADU - 635854. - 635854

NAZARETH

2609. ASIR AUTOMOBILES PVT LTD (--01), OLD NO. 49B, 49C & 49D, NEW NO. - 194, 195 & 196, CHURCH STREET, NAZARETH, TUTICORIN DIST. TN– 628617 - 628617

NEGAMAM

2610. ABT LIMITED (--01), 68, 69, ABT BUS STAND, PALLADAM ROAD, PERIA NEGAMAM, POLLACHI, TAMIL NADU - 642120

NEYVELI

2611. VISHNU CARS PVT LTD (--01), SURVEY NO:545/2A1A, NH-45C, OPP. NATIONAL COLLEGE,KUMBAKONAM - CHENNAI HIGH WAY, NEAR NEYVELI ARCH GATE, NEYVELI T.S, KEELAKOLLAI, MARUNGUR POST,PANRUTI,CUDDALORE DISTRICT, TAMILNADU - 607103
PH :9384059575.

OMALUR

2612. SRI AMMAN CARS INDIA PVT LTD (--04), 123, 3B, NH-7, BANGALORE BYE PASS ROAD, KOTTAMETTUPATTI, OMALUR, SALEM (DIST.), TAMIL NADU - 636012

2613. THRIVENI CAR COMPANY PVT LTD (--01), PLOT NO. 44 & 45, PALANIYAPPA NAGAR LAYOUT, NH-7, KAMALAPURAM VILLAGE, OMALUR, DISTRICT – SALEM, TAMIL NADU - 636309

OOTY

2614. SREE SARADHAMBAL AUTOMOBILES PVT LTD (4103--05), VIJAYANAGARAM FARM ROAD, NEAR ROSE GARDEN, OOTY - 643001

PADAPPAI

2615. VISHNU CARS PVT LTD (--01), SURVEY NO.368/2A/1, 368/2A/2, VANDALLUR-WALAJABAD MAIN ROAD, PADAPPAI EAST, CHENNAI. - 601301
PH :8754417168.

PALACODE

2616. SRI AMMAN CARS INDIA PVT LTD (--01), SURVEY NO 620/1A2, 620/1A2B,KARAKHATHAHALLI VILLAGE, PALACODE,DHARMAPURAM DISTRICT,TAMIL NADU - 636808

PALANI

2617. PL.A MOTORS (--02), NO:13-1-11C-1, WEST AYAKUDI, DINDIGUL ROAD, PALANI, DINDIGUL DISTRICT, TAMIL NADU - 624613

PANRUTI

2618. VISHNU CARS PVT LTD (--01), SURVEY NO: 87/4, 87/T R V NAGAR, LAKSHMI NARAYANAPUR AM VILLAGE-PANRUTI - 607106

PARAMATHIVELUR

2619. SREE SARADHAMBAL AUTOMOBILES PVT LTD (--01), SURVEY NO. 171, NEAR KONGU SCHOOL, NAMAKKAL BYPASS ROAD, PADAMUDI PALAYAM, TALUKA – PARAMATHIVELUR, NAMAKKAL , TAMIL NADU. - 638182
PH :8870666599.

PATTUKKOTTAI

2620. PILLAI & SONS MOTOR COMPANY (--01), SURVEY NO. 85/6, 85/4, 84/6, DOOR NO.314/11, SRI JANAGALAKSHMI NAGAR, THANJAVUR ROAD, ALADIKUMULAI VILLAGE, TALUK PATTUKOTTAI, THANJAVUR. - 614615
PH :7094433074.

PAVITHRAM

2621. SREE SARADHAMBAL AUTOMOBILES PVT LTD (--01), SURVEY NO. 102/1B, NAMAKKAL MAIN ROAD, PAVITHRAM - 637021
PH :9600320888.

PENNAGARAM

2622. SRI AMMAN CARS INDIA PVT LTD (--01), SURVEY NO. 419/1, VILLAGE – PARUVADHANAALLI, PENNAGARAM, DHARMAPURI. - 636810
PH :9715044700.

PERAMBALUR

2623. PL.A MOTORS (2305--04), SURVEY NO.88/1, A3,NH45, ELAMBALUR VILLAGE, PERAMBALUR, TAMILNADU - 621212
PH :8870004960.

PERNAMBUT

2624. SRI AMMAN CARS INDIA PVT LTD (--01), SURVEY NO:708,PLOT NO: 87,88 & 89, PERNAMBUT TO GUDIYATTAM ROAD, PERNAMBUT,VELLORE DISTRICT, TAMIL NADU - 635810 - 635810
PH :7094403100.

PERUMBAKKAM

2625. KHIVRAJ MOTORS PVT LTD (--01), NO:1,VARALAKSHMI NAGAR, THIRUVALLUR ROAD, PERAMBAKKAM,KANCHIPURAM DIST, TAMILNADU- 631402 - 631402
PH :7338786693.

PERUNDURAI

2626. SREE SARADHAMBAL AUTOMOBILES PVT LTD (--01), SF NO.542/1, KOVAI MAIN ROAD, PERUNDURAI VILLAGE, PERUNDURAI DISTT. ERODE, TAMIL NADU - 638052
PH :9597490777.

PN PALAYAM

2627. JAIKRISHNAA AUTOSALES PVT LTD (4107--04), NO.12/190 SRKV PORT, MTR ROAD, P.N. PALAYAM, COIMBATORE - 641020
2628. SREE SARADHAMBAL AUTOMOBILES PVT LTD (--01), NO.: 12/90, TKV GARDEN, SRKV POST , MTP ROAD,P.N.PALAYAM, TAMIL NADU - 641020

POCHAMPALLI

2629. SRI AMMAN CARS INDIA PVT LTD (--01), NEW SURVEY NO. 561/5, VILLAGE – JUMBUKUTTANPATTI, POCHAMPALLI, KRISHNAGIRI. - 635206

POLLACHI

2630. ABT LIMITED (--01), NACHIMUTHU POLYTECHNIC CAMPUS, UDUMALPET ROAD, POLACHI - 642003

POLUR

2631. GANESH CARS PVT LTD (--01), AZHAGO COMPLEX, SURVEY NO:77/1, CUDADALOR TO CHITTOOR ROAD, POLUR, THIRUVANNAMALAI DISTRICT,TAMILNADU - 606803
PH :9842345200.

PONNAMARAVATHY

2632. PL.A MOTORS (--01), NO:4-1B2B & 4-1B3,PUDUKKOTTAI MAIN ROAD, PONNAMARAVATHI, PUDUKKOTTAI DIST., TAMILNADU-622407 - 622407

PONNERI

2633. ABT LIMITED (--01), DOOR NO.18(S.F.NO42/1A-3), KRISHNA PURAM,PONNERI TALUK, - 601204

PUDDUKOTAI

2634. PL.A MOTORS (2305--02), NO. 10, MARIAMALAI NAGAR, ALANGUDI- THIRUMAYAM ROAD, PUDUKOTTAI, - 622003

PULIYANGUDI

2635. AADHI CARS PVT LTD (---), TENKASI -PULIYANKUDI ROAD, PULIYANKUDI, DISTRICT-TENKASI, TAMILNADU - 627855

PUNJAI PULIAMPATTI

2636. SREE SARADHAMBAL AUTOMOBILES PVT LTD (--01), SURVEY NO. 250/1, PANKAU PULIYAMPATTU MUNICIPALITY, PUNJAI PULIYAMPATTI - 638459, SATHY THALUK, ERODE. - 638459
PH :6385810777.

RAJAPALAYAM

2637. MEENAKSHI AUTO ZONE PVT LTD (--01), DOOR NO. 96, COTTON MARKET, TENKASI-MADURAI ROAD, RAJAPALAYAM, VIRUDHUNAGAR DIST., TAMILNADU - 626117
PH :9443785681.

RAMANATHAPURAM

2638. SIVA AUTOMOTIVE TRADING PVT LTD (--01), SURVEY NO. 172/1B2C, 172/2C, VILLAGE - ACHUNTHANVAYAL, ACHUNTHANGAL GROUP, TALUK - RAMANATHAPURAM, RAMANATHAPURAM. - 623502
PH :8098110000.
2639. MEENAKSHI AUTO ZONE PVT LTD (--01), SURVEY NO: 458/4, MADURAI - RAMESWARAM ROAD, NEAR RAMNAGAR BUS STOP, RAMANATHAPURAM, TAMIL NADU – 623503 - 623503

RAMESHWARAM

2640. SIVA AUTOMOTIVE TRADING PVT LTD (--01), NO:2307, SURVEY NO:279/3A, RAMNAD ROAD, ARIYANKADU, RAMESHWARAM, RAMANATHAPURAM DISTRICT, TAMILNADU
PH :7402788898.

RANIPET

2641. GANESH CARS PVT LTD (--01), SURVEY NO. 44/1, PLOT NO. 484, OPPOSITE TO THIRUMALAI CHEMICALS, SIPCOT LAYOUT OF HOUSE SITES, SIPCOTS INDUSTRIAL COMPLEX, RANIPET , TAMIL NADU. - 632403
PH :9842330388.

RASIPURAM

2642. SREE SARADHAMBAL AUTOMOBILES PVT LTD (--01), SURVEY NO:41/1 B1A, MOOLAKADU VILLAGE, MASAKALIPATTI, SALEM MAIN ROAD, RASIPURAM DISTT. NAMAKKAL - 637401

REDHILLS

2643. CARS INDIA (CRESCENT AUTO REPAIR & SERVICES INDIA PVT LTD) (1403--04), NO.503, G.N.T. ROAD, REDHILLS, CHENNAI - 600066
PH :9952000078.

SALEM

2644. ABT LIMITED (4101--03), 32 THAMANA CHETTY ROAD, ARISIPALAYAM, SALEM - 636009
2645. THRIVENI CAR COMPANY PVT LTD (--01), 12/2E1, SUBRAMANIA NAGAR, 2ND GATE, JUNCTION ROAD, SALEM. - 636005
2646. S M CAR PVT LTD (--01), SF NO. 64/2C3, ATTUR SALEM BYPASS ROAD, PINANGUKARAR THOTTAM, SEELANIKANPATTY, SALEM. - 636202
2647. THRIVENI CAR COMPANY PVT LTD (--03), SURVEY NO. 57, VILLAGE - MASINAICKENPATTY, AYOTHIAPATTINAM, AMMAPET, SALEM. - 636103
2648. S M CAR PVT LTD (--02), DOOR NO. 50/28, SF NO. 1/10B, SARADHA COLLEGE MAIN ROAD, ALAGAPURAM PUDHUR VILLAGE, HASTHAMPATTY, SALEM, TAMILNADU - 636007
PH :7094440053.

SANKAGIRI

2649. THRIVENI CAR COMPANY PVT LTD (--01), SURVEY NO.171/5B, KCK PLAZA, KACHERIDADU, DEPUTY COLLETCTOR ROAD, SALEM, SANKAGIRI (TAMIL NADU) - 637301

SANKARANKOVIL

2650. AADHI CARS PVT LTD (--01), PLOT NO. 132/H, OPPOSITE TO NEW TALUK OFFICE, TIRUVENGADAM ROAD, SANKARANKOVIL. - 627756
PH :7397728025.

SATHYAMANGALAM

2651. SREE SARADHAMBAL AUTOMOBILES PVT LTD (--01), SURVEY NO. 51, 54 & RS NO. 37, KOTTUVEERAMPALAYAM VILLAGE, SATHYAMANGALAM – 638 401, DISTRICT – ERODE, TAMIL NADU - 638401
PH :9597592777.

SATTUR

2652. MEENAKSHI AUTO ZONE PVT LTD (--01), SURVEY NO. 18/10,CHATRAPATTI VILLAGE, MADURAI KANYAKUMARI NATIONAL HIGHWAYS, SATTUR, VIRUDHUNAGAR DISTRICT,TAMILNADU - 626203
PH :9940094881.

SEYDUNGANALLUR

2653. ASIR AUTOMOBILES PVT LTD (--02), SURVEY NO. 59/3E, TIRUCHENDUR ROAD, SEYDUNGANALLUR TOWN, TALUK - SRIVAIKUNTAM, TUTICORIN DIST., TAMIL NADU. - 628809
PH :8344992220.

SHOLINGUR

2654. GANESH CARS PVT LTD (--01), NO:401, ARAKKONAM MAIN ROAD,OPPOSITE TVS FOUNDARY, PANDIYANELLORE,SHOLINGHUR,WALAJA TALUK, RANIPET DISTRICT, TMILANADU - 631102
PH :7397395259.

SIVAGANGAI

2655. ASIR AUTOMOBILES PVT LTD (--01), S. NO: 144/1, SIVAGANGAI-THONDI ROAD, PAIYAURPILLAIVAYAL, SIVAGANGAI,TAMILNADU - 630561
PH :9750372220.

SIVAKASI

2656. MEENAKSHI AUTO ZONE PVT LTD (--01), 372 D & E, ARUNACHALAM COMPLEX, THIRUTHANGAL ROAD, SIVAKASI. - 626123

SRIPERUMBUDUR

2657. RAJALAKSHMI CARS PVT LTD (--01), SURVEY NO. 150/1A, DOOR NO 1C, THERADI STREET, NEW VILLAGE NO 42, SRIPERUMBADUR, KANCHEEPURAM DISTRICT, TAMIL NADU. - 602105
PH :8939995469.

SRIVILLIPUTHUR/RAJAPALAYAM

2658. ABT LIMITED (4202--03), NO. 10/32, PADIKKASUVAITHANPATTI , NEAR RTO OFFICE, SRIVILLIPUTHUR, VIRUDHUNAGAR, TAMIL NADU - 626125

SULUR

2659. JAIKRISHNAA AUTOSALES PVT LTD (4107--05), DOOR NO. 37 F, RANGANATHAPURAM, TRICHY ROAD, SULUR - 641402

TENKASI

2660. AADHI CARS PVT LTD (--01), DOOR NO. 3/50-1, SURVEY NO. 447B, TIRUNELVELI MAIN ROAD, VILLAGE – KUNARAMANALLUR, TENKASI. - 627814
PH :9500991475.
2661. AADHI CARS PVT LTD (--02), DOOR NO. 47, MADHALAMPARAI, TENKASHI AMBAI HIGHWAY, TENKASHI, TIRUNELVELI DIST., TAMILNADU. - 627814
PH :9500991475.

THALAIVASAL

2662. THRIVENI CAR COMPANY PVT LTD (--01), S NO: 5/268,NEAR NATHANKARAI TOLL PLAZA, VADAKKU KADU, NATHANKARAI, THALAIVASAL, SALEM, TAMILNADU - 636122

THAMMAPATI

2663. S M CAR PVT LTD (--01), SURVEY NO # SF: 328/11, NAGIAMPATTI, THAMMAPATTI,SALEM DISTRICT, TAMILNADU - 636113. - 636113
PH :7094440010.

THANJAVUR

2664. PILLAI & SONS MOTOR COMPANY (--01), 12A, SELVAM NAGAR, TANJAVUR, TAMILNADU - 613007
2665. PL.A MOTORS (--01), SURVEY NO. 173/6B4, TRICHY-THANJAVUR ROAD, NANJIKOTTAI BYPASS, THANJAVUR, TAMILNADU - 613005

THARAMANGALAM

2666. THRIVENI CAR COMPANY PVT LTD (--01), NO. 1/122, KATTAMPATTI, JALAKANDAPURAM, THARAMANGALAM, SALEM DIST. ,TAMIL NADU. - 636501

THELLAR

2667. SRI AMMAN CARS INDIA PVT LTD (--01), THIRUVANNAMALAI BYE-PASS ROAD, THELLAR - 604406

THENI

2668. MEENAKSHI AUTO ZONE PVT LTD (--01), DOOR NO. 871/1, RATHINAM NAGAR, PERIYAKULAM MAIN ROAD, THENI TOWN, DISTRICT – THENI - 625531
PH :9789703881.

THIRUKALUKUNDRAM

2669. AIE CARS PVT LTD (--01), SURVEY NO.113/38, DOOR NO.61, MADRAS ROAD, MANGALAM VILLAGE, TIRUKALUKUNDRAM, CHENGALPATTU DISTRICT, TAMIL NADU- 603 107 - 603107

THIRUKOVILUR

2670. ABT LIMITED (--01), S.NO: 729/10, NO:45, SANDAPET, AANUR, THIRUKOVILUR, KALLAKURICHI DIST - 605757

THIRUMAZHISAI

2671. CARS INDIA (CRESCENT AUTO REPAIR & SERVICES INDIA PVT LTD) (--01), DP 30, SIDCO INDUSTRIAL ESTATE, THIRUMAZHISAI, - 600124
PH :9500064259.

THIRUMULLAIVOYAL

2672. CRESCO (A UNIT OF NEXGEN VENTURES PVT LTD) (--01), NO. 48, BALAJI NAGAR, NEW SIR IRVANSTADE FORD HOSPITAL, THIRUMULAIVOYAL DISTT. CHENNAI - 600062
PH :7305087044.

THIRUTHURAIPOONDI

2673. PILLAI & SONS MOTOR COMPANY (--01), NO:246/3, SRI KRISHNA LODGE COMPLEX, THIRUVARUR ROAD,THIRUTHURAIPOONDI, THIRUVARUR DIST., TAMILNADU- 614713. - 614713

THIRUVAIYARU

2674. PILLAI & SONS MOTOR COMPANY (--01), NO.5, ODAURAI STREET, THIRUVAIYARU, 613204 - 613204

THIRUVALLUR

2675. KHIVRAJ MOTORS PVT LTD (1404--04), 2151, KAKKULUR ROAD, THIRUVALLUR - 602001
2676. KHIVRAJ MOTORS PVT LTD (1404--05), PLOT NOS.218,219,220,225,226,227.228 AND S.NOS.18/5,18/6, EMPIRE CITY PART-3, KAKKALLUR VILLAGE, THIRUVALLUR THALUK, THIRUVALLUR - 602001

THIRUVANNAMALAI

2677. GANESH CARS PVT LTD (--03), NO.-5, NH-78, KRISHANAGIRI PONDY ROAD, CHINA KANKEYANUR, OPP SKP ENGG. COLLEGE, THIRUVANNAMALAI - 606601
PH :9842305072.

THIRUVARUR

2678. PILLAI & SONS MOTOR COMPANY (--03), THANJAI NAGARI ROAD, OPP. TO S. P. OFFICE - 610001
2679. PILLAI & SONS MOTOR COMPANY (--01), NO. 9, WARD NO.-4, BLOCK NO. 10, NEW SY. NO. 601/6B1, SUNDARAVILAGAM, NARSINGHAMPET, THIRUVARUR TOWN & DIST., TAMIL NADU - 610001
PH :9442163509.

THISAYANVILLAI

2680. AADHI CARS PVT LTD (--01), SURVEY NO. 240/1, 7/1, HIGHWAYS ROAD, OPP. TO VO OFFICE, SELVA MARUTHUR, THISAYANVILLAI. - 627657
PH :7339511187.

THITTAKUDI

2681. VISHNU CARS PVT LTD (---), SURVEY NO 129/1, ERAMANGALAM VILLAGE, THITHAKUDI,CUDDALORE DISTRICT, TAMILNADU - 606106

THOPPUR

2682. SRI AMMAN CARS INDIA PVT LTD (--01), SITE NO. 422 /2A, BANGALORE TO SALEM HIGH WAY, AMMANI, THOPPUR VILLAGE & TOWN,NALLAMPALLI TK, DHARMAPURI DISTRICT, - 636352
PH :9790004273.

THUCKALAY

2683. ATHEN CARS (--01), DOOR NO. 5/76B, (RE SURVEY NO-530/7) THIRUVITHANCODE ROAD, KERALAPURAM, MUTHALAKURICHI, VILLAGE – MUTHALAKURUCHI, KALKULAM-TALUK, THUCKALAY, DISCTRICT – KANYAKUMARI, TAMILNADU - 629174
PH :8012029888.

THURAIYUR

2684. PL.A MOTORS (--01), D.NO.:5/300, SINGALANDHAPURAM VILLAGE, THURAIYUR DISTT. TRICHY (TAMIL NADU) - 621010
PH :9486763725.

TINDIVARAM

2685. VISHNU CARS PVT LTD (--01), SURVEY NO. 50/4, 50/5 & 63, NEAR RTO OFFICE, MOLASUR, TINDIVANAM, VILUPPURAM,TAMILNADU - 604102
PH :9500039023.

TIRUCHENDUR

2686. ASIR AUTOMOBILES PVT LTD (--01), SURVEY NO. 220/1D1A, 221/3, 221/4, 221/5, 221/5A, 221/5B, PODHIGAI NAGAR, VILLAGE-VEERAPANDIYAPATINAM, THIRUCHENDUR, TUTUCORIN. - 628215
PH :7373900220.

TIRUCHENGODE

2687. SREE SARADHAMBAL AUTOMOBILES PVT LTD (--02), PLOT NO-10, OPP TO PONNUSWAMY KALYANA MANDAPAM, KOOTAPALLI COLONY, TIRUCHENGODE - 637001

TIRUNELVELI

2688. AADHI CARS PVT LTD (--01), PLOT NO. 261, MADURAI MAIN ROAD, KARAIERUPPU, TIRUNELVELI , TAMIL NADU - 627357
PH :9500991610.
2689. AADHI CARS PVT LTD (--03), DOOR NO. 37, RAMNAGAR, KTC NAGAR, TIRUNELVELI, TAMIL NADU. - 627011
PH :9500991610.
2690. AADHI CARS PVT LTD (--04), SF NO:161/4, SF NO: 893/2, NORTH BYEPASS ROAD, GALAXY HOSPITAL BACKSIDE, PALAYANKOTTAI, TIRUNELVELI, TAMILNADU - 627001

TIRUPATHUR

2691. GANESH CARS PVT LTD (--01), SURVEY NO.54/4, TIRUPATHUR TO KRISHNAGIRI ROAD, PALLIPET VILLAGE, TIRUPATHUR DISTT. VELLORE - 635601
PH :9842308909.

TIRUPATTUR(SIVAGANGAI)

2692. ABT LIMITED (--01), DOOR NO. 8/2/29A, KARAIKUDI ROAD, TIRUPATHUR, DISTRICT – SIVAGANGAI. - 630211

TIRUPPUVANAM

2693. MEENAKSHI AUTO ZONE PVT LTD (--01), NO:21,BAKHYA NAGAR, WARD NO:1, MANDAPAM MAIN ROAD, TIRUPPUVANAM, SIVAGANGA DISTRICT, TAMIL NADU - 630611 - 630611
PH :9442799581.

TIRUPUR

2694. ABT LIMITED (4101--09), NO. 4, SABHAPATHI PURAM, NEAR TMF HOSPITAL, TIRUPUR - 641601
2695. SHASHTI CAR PRIVATE LIMITED (--01), SRI PADMINI GARDENS, KANGEYAM ROAD, OPP. ST JOSEPH SCHOOL, TIRUPUR - 641604

TIRUTHANI

2696. CARS INDIA (CRESCENT AUTO REPAIR & SERVICES INDIA PVT LTD) (--01), NO. 9/13, CHENNAI BY PASS ROAD, OLD CHENNAI ROAD, DISTT. THIRUVALLUR, TIRUTHANI,TAMILNADU - 631209
PH :7358773860.

TIRUVANNAMALAI

2697. SRI AMMAN CARS INDIA PVT LTD (--01), 2A/2, SURVEY NO. 3676/3, ANNA SALAI, TIRUVANNAMALAI-CHENNAI NH-101, TIRUVANNAMALAI TOWN AND DIST., TAMILNADU - 602601
PH :7094471293.

TONDI

2698. SIVA AUTOMOTIVE TRADING PVT LTD (--01), SURVEY NO: 85/16, WARD 10/78, SOUTH THOPU STREET, ECR MAIN ROAD, ECR, THONDI, RAMANATHAPURAM DISTRICT, TAMIL NADU - 623409
PH :7402788820.

TRICHY

2699. ABT LIMITED (2302-23-02), 4/40, COLLECTOR OFFICE ROAD, CANTONMENT, TRICHY - 620001
2700. PL.A MOTORS (2305-23-01), NO. 18/2, NA-45, DHEERAN NAGAR, TRICHY-DINDUGAL MAIN ROAD, TRICHY - 620009
2701. ABT LIMITED (2302-23-03), MADRAS TRUNK ROAD, MAMBALASALAI, TRICHY - 620005
2702. PL.A MOTORS (2305-23-03), 10A & B, ALXANDRIA ROAD, CANTONMENT, TRICHY - 620001
2703. PILLAI & SONS MOTOR COMPANY (2306-23-01), SURVEY NO. 10B, 1A/D, CHENNAI TRICHY BY-PASS ROAD, VILLAGE - THIRUNALLUR, TRICHY. - 620002
2704. ABT LIMITED (2302--04), NO.46/3, 46/5A, AGARAM VILLAGE, TIRUVERAMBUR TOWN & TALUK, TIRUCHIRAPPALLI (TRICHY) DISTRICT, TAMIL NADU – 620013. - 620013

TUTICORIN

2705. ASIR AUTOMOBILES PVT LTD (--01), SURVEY NO. 25/1B, MAPPILLAIURINI VILLAGE, ETTAYAPURAM ROAD, TUTICORIN, TAMIL NADU - 628002
PH :7373501220.

UDUMALPET

2706. ABT LIMITED (--01), 2/3, PERIYAKOTTAI PIRIVU, S.V. MILL POST, UDUMALPET - 642126

ULANDURPET

2707. ABT LIMITED (--01), S NO: 392/1A, DOOR NO: 2129/2020, ULANDURPET, KALLAKURICHI DIST, TAMIL NADU- 606107. - 606107

USILAMPATTI

2708. SIVA AUTOMOTIVE TRADING PVT LTD (--01), NO. 33/1B2A, USILAMPATTI - MADURAI HIGHWAY,POTTULUPATTI PANCHAYATH, USILAMPATTI, MADURAI DISTRICT, TAMILNADU-625532 - 625532
PH :7868088840.

UTHANGARAI

2709. SRI AMMAN CARS INDIA PVT LTD (--01), SURVEY NO. 104/1, 104/1B, VILLAGE – THANDIYAPANNUR, UTHANGARAI, KRISHNAGIRI. - 635304
PH :9715044600.

UTHIRAMERUR

2710. AIE CARS PVT LTD (--01), SURVEY NO:383/3B-B2, UTHIRAMERUR MAIN ROAD, UTHIRAMERUR, KANCHEEPURAM DISTRICT, TAMILNADU - 603406

UTHUKOTTAI

2711. KHIVRAJ MOTORS PVT LTD (--01), SURVEY NO. 442/1, NEHRU BAZZAR STREET, UTHUKOTTAI, DIST.-THIRUVALLUR - 602026
PH :7299635536.

VALLIYUR

2712. AADHI CARS PVT LTD (--01), DOOR NO. 314A/11-14, WITHIN VADAKU VALLIOOR, REVENUE VILLAGE, VADAKKU VALLIOOR PANCHAYAT, RADHAPURAM TALUK, VALLIOOR. - 627002
PH :7373091462.

VANDAVASI

2713. GANESH CARS PVT LTD (--01), SURVEY NO.272, KEELSATHAMANGALAM VILLAGE, CHETPET ROAD, VANDAVASI, TIRUVANNAMALAI, DISTT. T.N. - 604408
PH :7395802484.

VANIYAMBADI

2714. GANESH CARS PVT LTD (--01), NO. 197/1B1, NH-46 (AH-7), PETHAKALLUPALLI VILLAGE, NEAR TOLL GATE, VANIYAMBADI , VELLORE (DIST), TAMIL NADU. - 635801
PH :9842327709.

VELLAKOVIL

2715. SRI CITY AUTO (A UNIT OF CITY AUTO PVT LTD) (--01), SURVEY NO:502/C &371/D, NO. 196,197,KOVAI KARUR MAIN ROAD, VELLAKOVIL, TIRUPUR DIST. , TAMILNADU - 638111
PH :9994606000.

VELLORE

2716. GANESH CARS PVT LTD (--01), 91 NEW BY-PASS ROAD, VELLORE - 632004
PH :9842377110.

2717. SRI AMMAN CARS INDIA PVT LTD (--01), DOOR NO. 68, SURVEY NO. 66/7, NEAR RANGALAYA KALYANA MANDAPAM, VELLORE-KATPADI ROAD, KALINJUR VILLAGE, KATPADI TALUKA, GANDHINAGAR, VELLORE DIST., TAMIL NADU. - 632006

2718. SRI AMMAN CARS INDIA PVT LTD (--02), SURVEY NO. 316/3B2, 316/8A, 316/8B, NEAR SHELL PETROL PUMP, MELMONAVUR VILLAGE,VELLORE TALUK & DIST. ON NH48 (CHENNAI – BENGALURU HIGHWAY), VELLORE, TAMILNADUR - 632010
PH :7094471320.

2719. GANESH CARS PVT LTD (--06), SY NO. 188/2B, EDAYANSATHU, ARANI ROAD, BAGAYAM, VELLORE - 632503

VENGAL

2720. VISHNU CARS PVT LTD (--01), NEW SURVEY NO:67/1B, 67/20, CHINMAYA NAGAR,THAMARAIPAKKAM VILLAGE, VENGAL,THIRUVALLUR DIST., TAMILNADU-601103 - 601103
PH :9500121559.

VEPPAMPATTU

2721. POPULAR VEHICLES AND SERVICES LIMITED (--01), SNO. 35/2A2, CTH ROAD 89,, VEPPAMPATTU,TIRUVALLUR DIST, TAMIL NADU - 602 024, - 602024

VILLUPURAM

2722. ABT LIMITED (--02), 264/1, GINGEE MAIN ROAD, AYINAMPALAYAM, VILLUPURAM - 605602

VIRUDHACHALAM

2723. ABT LIMITED (--01), PLOT NO. 56, JUNCTION ROAD, NEAR SHANMUGA LODGE, VIRUDHACHALAM, DISTRICT – CUDDALORE, TAMIL NADU. - 606101

VIRUDHUNAGAR

2724. MEENAKSHI AUTO ZONE PVT LTD (--0A), DOOR NO:6/504, SURVEY NO. 11/6, PELAMPATTI VILLAGE,VIRUDHUNAGAR MADURAI HIGH WAY,OPPOSITE TO VVV COLLEGE. , TALUK & DIST. VIRUDHUNAGAR, TAMILNADU - 626001
PH :9940094881.

WALAJABAD

2725. AIE CARS PVT LTD (--01), SURVEY NO: 334, KANCHEEPURAM- CHENGALPET ROAD, VENGUDI, WALAJABAD VILL AND TOWN, KANCHIPURAM DIST.,TAMIL NADU631605 - 631605

TELANGANA

ACHAMPET

2726. SRI JAYARAMA MOTORS PVT LTD (--01), SURVEY :133/A/3/1 HYDERABAD ROAD ACHAMPET ,NAGARKURNOL DT - 509375

ADDANKI

2727. JAYALAKSHMI AUTOMOTIVES PVT LTD (--01), SURVEY NO-1020/2, RAMANAGAR, ONGOLE ROAD, ADDANKI - 523201

ADILABAD

2728. ADARSHA AUTOMOTIVES PVT LTD (--01), SURVEY NO:131/6 & 131/7, NH-44, ADILABAD TOWN ROAD, MAVALA, ADILABAD, TELANGANA. - 504001
PH :9133307724.

AMANGAL

2729. THE MITHRA AGENCIES (--01), VIDHAYA NAGAR COLONY,ROAD NO:5, OPPOSITE INDIAN OIL,MRO OFFICE,S NO:1439 - 509321

ARMUR

2730. VARUN MOTORS PVT LTD (--01), SURVEY NO.277, ARGUL VILLAGE, JAKARANPALLY (MANDAL), ARMUR, NIZAMABAD DISTT. (A.P.) - 503224
PH :9052901888.

BANSWADA

2731. VARUN MOTORS PVT LTD (--01), #2-138/5,SOMESHWAR SHIVAR, NEAR BIKNOOR "X" ROAD, BANSWADA(M) - 503187

BASARA

2732. ADARSHA AUTOMOTIVES PVT LTD (--01), URVEY NO 59/E, RAVINDRAPUR , BASARA, NIRMAL DISTRICT, TELANGANA - 504101
PH :8886092222.

BELLAMPALLY

2733. ADARSHA AUTOMOTIVES PVT LTD (--01), SURVEY NO 5/31, PEDANAPALLI, BELLAMPALLY, MANCHERIAL DISTRICT, TELANGANA - 504251
PH :8886092222.

BHADRACHALAM

2734. VARUN MOTORS PVT LTD (--01), H-NO 1-138/1B-OLD SARPAKA ROAD, BHADRACHALAM, BHADRADI-KOTHAGUDEM, TELANAGANA - 507111
PH :9885576602.

BHEEMGAL

2735. VARUN MOTORS PVT LTD (--01), SURVEY NO. 398, MORTHAD ROAD, - 503307

BHONGIR

2736. PAVAN MOTORS PVT LTD (--01), SURVEY NO 779, YADADRI BHONGIR DISTRICT, BHONGIR, TELANGANA - 508116

BHUPALAPALLY

2737. ADARSHA AUTOMOTIVES PVT LTD (--04), SY NO.314, HANAMKONDA ROAD, MANDAL BHUPALAPALLY, TELANGANA
6-113, JAWAHAR NAGAR, MAIN ROAD, SBH MAIN BRANCH ROAD, BHUPPALPALLY, DISTRICT - WARANGAL, ANDHRA PRADESH - 506169
PH :7799790526.

BODHAN

2738. VARUN MOTORS PVT LTD (--01), PLOT NO. 5/2, ACHANAPALLY CROSS ROAD, BODHAN, DIST. -NIZAMABAD, TELANGANA. - 503185

CHEGUNTA

2739. AUTOFIN LIMITED (--01), 1/45/3, CHEGUNTA, CHEGUNTA MANDAL, MEDAK DISTRICT, NATIONAL HIGHWAY NO - 44 FACING, TELANGANA - 502255

CHEVELLA

2740. GEM MOTORS (INDIA) PVT LTD (--01), SURVEY NO. 17/A, MANDAL – CHEVELLA, DISTRICT – RANGA REDDY, TELANGANA. - 510101

DAMMAPETTA

2741. VARUN MOTORS PVT LTD (--01), NEAREST H.NO 5-48 CPS SCHOOL,DAMMAPETA ,BADRI KOTHAGUDEM DT,TELANGANA

DORNAKAL

2742. ADARSHA AUTOMOTIVES PVT LTD (--01), SY NO.150, BY PASS JUNCTION, NTR CIRCLE, DORNAL, MAHBUBABAD DIST., DOORNAKAL, TELANGANA - 506381

DUBBAKA

2743. ADARSHA AUTOMOTIVES PVT LTD (--01), ADARSHA AUTOMOTIVE PVT LTD, OPP. BUS DEPOT, BYPASS ROAD, SIDDIPET, TELANGANA

ETUNAGARAM

2744. WIN MOTORS (A UNIT OF BHADRAKALI AUTOCARE PVT LTD) (--01), H.NO 12-412 & 12-413,AKULAVARI GHANPUR, ETURNAGARAM, MULUGU DISTRICT,TELANGANA - 506165
PH :8688828005.

GADWAL

2745. SRI JAYARAMA MOTORS PVT LTD (--02), PLOT NO. 5 & 6, BESIDE RURAL POLICE STATION, KURNOOL ROAD, MAHABUB NAGAR DISTRICT, ANDHRA PRADESH - 500125

GAJWEL

2746. ACER MOTORS (A DIVISION OF KRISHNAIAH MOTORS PVT LTD) (--01), SURVEY NO. 220, VILLAGE – PRAGNAYPUR, GAJWEL, DISTRICT – MEDAK, TELANGANA . - 502311

GHATKESAR

2747. ACER MOTORS (A DIVISION OF KRISHNAIAH MOTORS PVT LTD) (--01), 3-21, JODIMETLA, CHOUDA RIGID VILLAGE GHATKESAR MANDAL, DISTRICT – RANGA REDDY. - 501301

2748. JAYABHERI AUTOMOTIVES PRIVATE LTD (--01), SY NO. 581/B, GHATKESAR VILLAGE & MANDAL, MEDCHAL-MALKAJGIRI DIST - 501301

HUSNABAD

2749. ADARSHA AUTOMOTIVES PVT LTD (--01), SURVEY NO. 202/E, H. NO. 12-1/4 & 12-1/A, VILLAGE & MANDAL - HUSNABAD, DIST. -SIDDIPET, TELANGANA. - 505467

HUZURABAD

2750. ADARSHA AUTOMOTIVES PVT LTD (--01), SY NO 1687, ADJACENT TO KARIMNAGAR WARANGAL R&B ROAD, HUZURABAD - 505468

HYDERABAD

2751. THE MITHRA AGENCIES (1002-10-01), 1-8-670, NEAR RTC CROSS ROAD,AZAMABAD INDUSTRIAL AREA, HYDERABAD, - 500020
PH :9966838294.

2752. POPULAR VEHICLES AND SERVICES LIMITED (1088-10-01), SABOC TOWERS, RAJBHAVAN ROAD, SOMAJIGUDA, HYDERABAD - 500482
2753. POPULAR VEHICLES AND SERVICES LIMITED (1091-10-02), R-4/A,IDA BLOCK, INDUSTRIAL ESTATE,UPPAL, HYDERABAD - 500039
2754. VARUN MOTORS PVT LTD (4603-10-04), B-11 CO-OPERATIVE INDUSTRIAL ESTATE, BALANAGAR, HYDERABAD, - 500037
2755. VARUN MOTORS PVT LTD (4603-10-0B), ADITYA NAGAR COLONY, ,ADITYA NAGAR COLONY, TOLICHOWKI, SHAIKPET (VILLAGE, HYDERABAD, HYDERABAD - 500008
2756. VARUN MOTORS PVT LTD (1010-10-01), PLOT NO. VI- VII A & B,UNDER WARD NO. 10, AUTONAGAR, VANASTALIPURAM, HYDERABAD, R. R. DISTT - 500070
PH :9885208555.
2757. VARUN MOTORS PVT LTD (4603-10-06), SHOP NO. 31, SRIKRUPA MARKET, D.NO. 16-10-1/F/31, MALAKAPET, HYDERABAD - 500036
2758. POPULAR VEHICLES AND SERVICES LIMITED (1091-10-01), 16-11-19/5/2/C, SALEEM NAGAR COLONY,MALAKPET (NEAR FARHAT HOSPITAL),HYDERABAD - 500036
2759. THE MITHRA AGENCIES (1002-10-03), PLOT NO. 3-4-10,NEAR MADHAPUR POLICE STATION, MADHAPUR, HYDERABAD - 500081
2760. POPULAR VEHICLES AND SERVICES LIMITED (1088-10-02), 11-6-191/192,OPP. HOTEL HARSHA,PUBLIC GARDEN ROAD, NAMPALLY, HYDERABAD - 500001
2761. VARUN MOTORS PVT LTD (4603-10-0A), 1-11-200,SHAMLALA BUILDING BEGUMPET, HYDERABAD - 500016
PH :9885206555.
2762. THE MITHRA AGENCIES (1002-10-04), 8-18-138, PLOT NO. 8,NEAR MARGADARSI CHIT FUND,L.B. NAGAR RING ROAD, RR DIST,HYDERABAD - 500074
PH :9963551265.
2763. GEM MOTORS (INDIA) PVT LTD (1009-10-01), RAGHUVENDRA SOCIETY,KONDAPUR,,HYDERABAD , ANDHRA PRADESH - 500084
PH :9912899128.
2764. GEM MOTORS (INDIA) PVT LTD (1009-10-02), 2-11, SURVEY NO: 165,172,HYDERNAGAR, KUKATPALLY, HYDERABAD, ANDHRA PRADESH - 500072
PH :9912344538.
2765. SAI SERVICE PRIVATE LIMITED (1011-10-01), PLOT NO. 88, INDUSTRIAL AREA,C.I.E. GANDHI NAGAR, ,BALANAGAR, HYDERABAD - 500037
PH :9010827755.
2766. THE MITHRA AGENCIES (1002-10-05), PLOT NO. 19,20 & 21,ROAD NO. 10,IDA NACHARAM, HYDERABAD - 500076
2767. VARUN MOTORS PVT LTD (1012-10-01), MARUTI AUTHORISED DEALER, SURVEY NO.115, IT PARK, NANAKRAMGUDA, GACHIBOWLI, HYDERABAD - 500008
2768. POPULAR VEHICLES AND SERVICES LIMITED (1089-10-01), D.NO.1-10-1/285/1, OPP. VEGITABLE MARKET, ECIL CROSS ROADS, KUSAIGUDA, HYDERABAD - 500062
2769. SAI SERVICE PRIVATE LIMITED (1011--04), H.NO.16-2-839/4/10, SAIDABAD, L.B.NAGAR, HYDERABAD. - 500059
PH :7799352000.
2770. VARUN MOTORS PVT LTD (4603--0G), 1-10-28/1 SY. NO.285, KUSHAIGUDA, NEAR ECIL X ROADS, HYDERABAD - 500062
PH :7799600093.
2771. VARUN MOTORS PVT LTD (4603-10-0H), PLOT NO. 1354/1, ROAD NO. 1, NEAR IOC PETROL PUMP, JUBLEE HILLS, HYDERABAD, ANDHRA PRADESH - 500033
PH :8886322776.
2772. VARUN MOTORS PVT LTD (4603-10-0J), PLOT NO. 1-45, SY.NO:1 TO 7, GOPINATH COMPLEX, TARANAGAR, LINGAMPALLY, HYDERABAD, RANGAREDDY DISTRICT, TELANGANA STATE - 500019
PH :8886067847.
2773. SAI SERVICE PRIVATE LIMITED (1011--07), PLOT NO.B-21 & B-34, BHEL ANCILLARY INDUSTRIAL ESTATE, RAMACHANDRAPURM, HYDERABAD - 502032
PH :9703811411.
2774. ADARSHA AUTOMOTIVES PVT LTD (1014--01), 18-2-45 NEAR FLYOVER, CHANDRAYANGUTTA "X" ROAD, HYDERBAD - 500005
2775. POPULAR VEHICLES AND SERVICES LIMITED (1088--03), SURVEY NO.434, 5-5-33/19, BEHIND HUDA TRUCK PARKING, KUKATPALLY, DISTT: RANGAREDDY, HYDERABAD - 500072
2776. SAI SERVICE PRIVATE LIMITED (1011-10-08), DOOR NO.7-2-C33 & C34, INDUSTRIAL ESTATE, SANATH NAGAR, HYDERABAD. - 500018
PH :7799360003.
2777. KALYANI MOTORS PRIVATE LIMITED (1018--01), PLOT NO. A-23 & A31/1, I.D.A, NACHARAM, HYDERABAD. - 500076
PH :9100114863.
2778. ADARSHA AUTOMOTIVES PVT LTD (1014-10-02), H. NO. 8-64/1, RUDRA COLONY, SHAMSHABAD, HYDERABAD. - 501218
PH :9603296633.
2779. GEM MOTORS (INDIA) PVT LTD (1009-10-03), SURVEY NO. 135/A & 135/AA, MANIKONDA, RAJENDRA NAGAR MANDAL, RANGAREDDY DISTRICT, HYDERABAD, TELANGANA. - 500089
PH :9912341524.
2780. JAYABHERI AUTOMOTIVES PRIVATE LTD (1017-10-01), PLOT NO. 113, 114, 115 IN LUMBINI ENCLAVE CB SQUARE, VILLAGE – GACHIBOWLI, SHERLINGAMPALLY MNADAL, HYDERABAD, TELANGANA STATE. - 500032
PH :9100909401.
2781. JAYABHERI AUTOMOTIVES PRIVATE LTD (1017-10-02), SURVEY NO.11/36, PLOT NO.32, 39 & 40, NEAR N CONVENTION CENTRE, KHANAMET, HYDERABAD, SHERLINGAMPALLY MANDAL, HYDERABAD. - 500081
PH :7799916666.
2782. ADARSHA AUTOMOTIVES PVT LTD (1019-10-01), H. NO. 2-4-43/15, SURVEY NO. 34, SOGBOWLI (PILLER NO. 185 OF P.V. NARSIMHA RAO EXPRESSWAY), RAJENDRANAGAR, UPPERPALLY, ATTAPUR, RANGA REDDY, HYDERABAD, TELENGANA. - 500048
2783. KALYANI MOTORS PRIVATE LIMITED (1018--02), M/S VIDHATA BINNY MODERN RICE MILL, BEARING NO. 8-4-15 IN SURVEY NO. 239 & 240 OF VILLAGE – KARMANGHAT, MANDAL – SAROORNAGAR, DISTRICT – RANGA REDDY, HYDERABAD. - 500079
PH :9100222377.
2784. THE MITHRA AGENCIES (1002-10-06), SURVEY NO.57, D.NO.8-2-108, BIRAMALGUDA, KARMANGHAT NAGARJUN SAGAR ROAD, HYDERABAD, TELANGANA. - 500079
PH :8886621232.
2785. VARUN MOTORS PVT LTD (4603-10-0M), KSN GARDENS, 5-162/6, BORABANDA MAIN ROAD, HYDERABAD. - 500018
PH :9885579623.
2786. JAYABHERI AUTOMOTIVES PRIVATE LTD (1017-10-03), SURVEY NO.283, PLOT NO.D-46 & 47, PHASE-V, IDA, JEEDIMETLA, QUTUBULLAPUR MANDAL, RANGA REDDY DISTT., HYDERABAD (TELANGANA). - 500055
PH :7799784567.
2787. ADARSHA AUTOMOTIVES PVT LTD (--03), SURVEY NO. 220/A, AMBEDKAR ROAD, OPP HERITAGE FRESH, NEAR AMBAEDKAR STATUE, NEAR ALWAL, SECUNDERABAD. - 500010
PH :9291859954.
2788. KALYANI MOTORS PRIVATE LIMITED (--03), SURVEY NO. 305, NIZAMPET, MANDAL - QUTBULLAPUR, DIST.-RANGA REDDY, HYDERABAD. - 500072
2789. SAI SERVICE PRIVATE LIMITED (1011--09), SURVEY NO 499/1, MIYAPUR TO BACHUPALLY ROAD,BACHUPALLY,HYDERABAD. - 500090
PH :7330771111.
2790. THE MITHRA AGENCIES (1002-10-07), SURVEY NO,12,13,14& 15, MEDIPALLY, GHATKESAR MANDAL, RANGA REDDY DISTRICT, HYDERABAD, TELANGANA - 500098
PH :8886697954.
2791. JAYABHERI AUTOMOTIVES PRIVATE LTD (1085-10-01), SURVEY NO 686,UPPAL, MEDCHAL-MALKAJGIRI DISTRICT,HYDERABAD,TELANGANA - 500013
PH :8142506666.
2792. PAVAN MOTORS PVT LTD (-10-02), PLOT NO 351,352,353,354,355,356,357 LEGALA CIRCLE ROAD, BHAGYALAKSHMI NAGAR, SERILINGAMPALLY, HYDERABAD - 500019
2793. JAYABHERI AUTOMOTIVES PRIVATE LTD (1017-10-04), SURVEY NO 7,14,15,16,IPM BLOOD BANK COLONY,HAYATHNAGAR-HYDERABAD. - 501504
2794. KALYANI MOTORS PRIVATE LIMITED (1018-10-05), SURVEY NO. 314/A/1, GOPANNAPALLY, SERILINGAMPALLY, HYDERABAD - 502032
2795. VARUN MOTORS PVT LTD (1086-10-01), SY NO. 90, NH-44, BESIDE DOLA RI DHANI, KOMPALLY, HYDERABAD, TELANGANA - 500100
2796. KALYANI MOTORS PRIVATE LIMITED (1018-10-04), SURVEY NO 314/A/1, GOPANNAPALLY, RC PURAM, HYDERABAD - 500019
2797. ADARSHA AUTOMOTIVES PVT LTD (--02), PLOT NO, 2B, 2C, 2D, 2E72F, VISHNU MARG, PARVATH NAGAR, MAIN ROAD MADHAPUR - 500081
2798. THE MITHRA AGENCIES (1002-10-08), SY NO. 575/1/2 & 576/1/2,ADIBATLA TCS RD, NEAR HP PETROL PUMP BUNK, NADARGUL - 501510
2799. VARUN MOTORS PVT LTD (--12), SURVEY NO.46, KEESARA MANDAL, NAGARAM, MEDCHAL, MALKAGIRI DIST., HYDERABAD - 500072

IBRAHIMPATNAM

2800. PAVAN MOTORS PVT LTD (--01), S.NO.123/E, MPP PATELGUDA, IBRAHIMPATNAM, RANGA REDDY - 501506
PH :8790144499.

JAGITIAL

2801. ADARSHA AUTOMOTIVES PVT LTD (--04), HOUSE NO.-1-5-216/A,OPPOSITE TO KVA SUBSTATION, KARIMNAGAR ROAD, JAGTIAL, - 505327
PH :8886152222.

JAMIKUNTA

2802. VARUN MOTORS PVT LTD (--01), SY NO. 794, KARIMNAGAR ROAD, AMMIKUNTA, DIST. KARIMNAGAR - 505152

JANGAON

2803. ADARSHA AUTOMOTIVES PVT LTD (--01), H.NO.339, HYDERABAD ROAD, JANGAON. - 506167
PH :7799626633.

JOGIPET

2804. VARUN MOTORS PVT LTD (--01), #8-65/12/C MAIN ROAD YARD ANDOLE MANDAL, OPP. MARKET YARD, SANGAREDDY, TELANGANA - 502270

JUKKAL

2805. VARUN MOTORS PVT LTD (--01), PLOT N9 OF SY NO 74/EE/3 AND 74/UU/I, KOWLAS VILLAGE, JUKKAL MANDAL, DIST-KAMAREDDY, TELANGANA - 503305

KADTHAL

2806. THE MITHRA AGENCIES (--01), S NO 8, KANDUKURU, KADTHAL, TELANGANA - 509358

KAGHAZNAGAR

2807. ADARSHA AUTOMOTIVES PVT LTD (--01), H.NO :1-61/3,BORIGAON,KAGHAZNAGAR,KOMARAMB HEEM - 504296
PH :8886092222.

KALWAKURTHY

2808. SRI JAYARAMA MOTORS PVT LTD (--01), D.NO.12-42, BESIDE INDIAN OIL, PETROL PUMP, DEVERAKONDA ROAD, KALWAKURTHY - 509324

KAMAREDDY

2809. VARUN MOTORS PVT LTD (--01), H.NO.11-107/61, BESIDE:GURU RAGHAVENDRA COLONY, CHINNA MALLAREDDY VILLAGE, KAMAREDDY. - 503111
PH :9985557570.

KARIMNAGAR

2810. ADARSHA AUTOMOTIVES PVT LTD (--01), H.NO. 8-6-313/1,HYDERABAD ROAD,BY-PASS JUNCTION,KARIMNAGAR - 505001

2811. ADARSHA AUTOMOTIVES PVT LTD (--05), H.NO.8-6-301/18, BY-PASS ROAD, AUTONAGAR, KARIM NAGAR, TELANGANA. - 505001

2812. VARUN MOTORS PVT LTD (--01), BEARING NO. 1-81/3/10/2, SURVEY NO. 221 & 222, REKURTHY VILLAGE, KARIMNAGAR-JAGTIAL ROAD, KARIMNAGAR MANDAL & DIST. , TELANGANA. - 505001

2813. VARUN MOTORS PVT LTD (--02), SURVEY NO. 277,278/B, AREPALLY VILLAGE, TEEGALAGUTTAPALLI GRAM PANCHAYAT, KARIMNAGAR - 505001
PH :9885210555.

2814. ADARSHA AUTOMOTIVES PVT LTD (--06), 1-81/3/10/2,JAGITYAL ROAD,REKURTHY, KARIMNAGAR - 505010

2815. VARUN MOTORS PVT LTD (--03), PLOT NO. 12,5,3 & 4, SY NO. 793, BOMMAKAL VILLAGE, KARIMNAGAR - 505001

KATARAM

2816. ADARSHA AUTOMOTIVES PVT LTD (--01), SY. NO. 131, H NO. 12-38, GAREPALLI, KATARAM(M), JAYASHANKAR(DIST.), TELANGANA. - 506169

KEESARA

2817. JAYABHERI AUTOMOTIVES PRIVATE LTD (--01), H-NO 3-56/9/6A, SURVEY NO 5,KEESARA, MEDCHAL-MALKAJGIRI, TELANGANA - 501301
PH :9676076666.

KHAMMAM

2818. MITHRA AUTO AGENCIES PVT LTD (2604--02), SURVY NO. 182,WARANGAL ROAD, OPP. FCI GODOWNS,PEDA THANDA,KHAMMAM - 507003
PH :8886063527.

2819. SANTOSH AUTOMOTORS PVT LTD (2607--03), SURVEY NO: 19, BESIDE ROYAL OAK FURNITUR, NEAR RTC BUS STAND, RAPARTHI NAGAR - 507318

KHANAPUR

2820. VARUN MOTORS PVT LTD (--01), NO:14-10A, NEAR SAI BABA TEMPLE, OPP. GIRLS HIGH SCHOOL, VILL & MANDAL: KHANAPOOR, DIST-NIRMAL

KODAD

2821. PAVAN MOTORS PVT LTD (--01), SURVEY NO. 42, KOMARBANDA REVENUE LIMITED, KODAD , DISTRICT – NALGONDA, TELANGANA - 508206
PH :8008899995.

KODANGAL

2822. POPULAR VEHICLES AND SERVICES LIMITED (--01), SURVEY NO 1156/AA1/2, BESIDE EESAIR PETROL PUMP, KODANGAL, VIKARABAD, TELANGANA - 509338

KOLLAPUR

2823. SRI JAYARAMA MOTORS PVT LTD (--01), SURVEY NO 259/AA2, 259/E2,KOLLAPUR, NAGAR KURNOOL DISTRICT, TELANGANA - 509102
PH :9985880015.

KOSGI

2824. SRI JAYARAMA MOTORS PVT LTD (--01), SY. NO. 1798/B, KOSGI TOWN, SITUATED TANDOR ROAD KOSGI(G.P & MANDAL), NARAYANPET DIST, TELANGANA

KOTHAGUDEM

2825. VARUN MOTORS PVT LTD (2603--04), DOOR NO. 5-35/4/B,LAKSHMIDAVI PALLI,BHADRACHALAM ROAD, KOTTHAGUDEM - 507101

LINGAMPET

2826. VARUN MOTORS PVT LTD (--01), 12-119, OPP:HONDA SHOWROOM, YELLAREDDY ROAD, LINGAMPET, DIST:KAMAREDDY - 503124

LUXITTIPET

2827. VARUN MOTORS PVT LTD (--01), SURVEY NO 289/E, NEAR BY SSR GARDENS,LUXETTIPET, MANCHERIAL DISTRICT, TELANGANA - 504215
PH :8297848999.

MADHIRA

2828. SANTOSH AUTOMOTORS PVT LTD (--01), SURVEY NO 33/A, H -NO : 1-780/8, MCN COMPLEX, WYRA ROAD, MADHIRA, KHAMMAM,TELANGANA - 507203

MAHABUBABAD

2829. ADARSHA AUTOMOTIVES PVT LTD (--01), SY. NO.38/A, MAHBUBABAD REVENUE VILLAGE AND MANDAL, MAHBUBABAD. - 506101

MAHBUBNAGAR

2830. SRI JAYARAMA MOTORS PVT LTD (--01), PLOT NO.C1 & C2, INDUSTRIAL ESTATE, METTUGADA, MEHBOOBNAGAR - 504001
PH :8096998846.

MAHESHWARAM

2831. ADARSHA AUTOMOTIVES PVT LTD (--01), (BEARING #5-187, SURVEY NO.:336/A1, VILLAGE & MANDAL: MAHESHWARAM DISTT. RANGA REDDY - 501359

MALL

2832. PAVAN MOTORS PVT LTD (--01), MALL HYDERABAD ROAD,, YACHARAM MANDALAM,RANGA REDDY DIST., - 501509

MANCHERIAL

2833. ADARSHA AUTOMOTIVES PVT LTD (--03), SURVEY NO 477 / 2, GARMILLA VILLAGE, MANCHERIAL, TELANGANA
BEHIND MAHINDRA TRACTORS SHOWROOM,BELLAMPALLY ROAD, MANCHIRIAL , DISTT. ADILABAD - 504208
PH :8886302222.

MANTHANI

2834. VARUN MOTORS PVT LTD (--01), SURVEY NO 1018, H NO 16-4/D2, PLOT NO 5, LAINGADDA STREET, MANTHANI, - 505184
PH :8886619373.

MANUGURU

2835. SANTOSH AUTOMOTORS PVT LTD (--01), MANUGURU MAIN RD, PILOT COLONY, MANUGURU (PT), TELANGANA - 507117

MARIPEDA BUNGLAW

2836. WIN MOTORS (A UNIT OF BHADRAKALI AUTOCARE PVT LTD) (--01), KHAMMAM - WARANGAL HWY, MARIPEDA BUNGLOW, MARIPEDA, TELANGANA 506315 - 506315

MEDAK

2837. VARUN MOTORS PVT LTD (--01), SY.NO.:1486/A3, HYDERABAD ROAD, MEDAK (MDL & TOWN) - 502110
PH :9154953337.

MEDCHAL

2838. AUTOFIN LIMITED (--01), H. NO. 11-27/1, SURVEY NO.401, MEDCHAL VILLAGE AND MANDAL, DIST. - MEDCHAL. - 501401
PH :8885040020.

METAPALLY

2839. ADARSHA AUTOMOTIVES PVT LTD (--01), SURVEY NO. 40/U/2 CHOULAMADHI, METPALLY PIN CODE 505325 - 505325
PH :8886092222.

MIRYALGUDA

2840. PAVAN MOTORS PVT LTD (--01), SURVEY NO-940 &943, (OPPOSITE TO MINA ENGINEERING COLLEGE) NARKETPALLY ADDANKI BY-PASS ROAD,MIRYALAGUDA ,NALGONDA DISTRICT,ANDHRA PRADESH - 508207
PH :8790900399.

MOINABAD

2841. GEM MOTORS (INDIA) PVT LTD (--01), SURVEY NO. 70, PLOT NO. 4, VILLAGE AND GRAM PANCHAYAT – HIMAYATH NAGAR, MANDAL – MOINABAD, DISTRCT – RANGA REDDY. - 500075

MOMINPET

2842. VARUN MOTORS PVT LTD (--01), SY NO.242/A/3, MOMINPET (VILL & MDL) - 501202

MORTHAD

2843. VARUN MOTORS PVT LTD (--01), H NO -16-1/3/B, KARIMNAGAR ROAD, MORTHAD, TELANGANA - 503225

MUSTABAD

2844. VARUN MOTORS PVT LTD (--01), OPP: NEW BUSTAND,MUSTABAD,RAJANNA SIRICILLA (D) - 521107

NAGARKURNOOL

2845. SRI JAYARAMA MOTORS PVT LTD (--01), SURVEY NO.44/A AND 45/A, UYYALWADA VILLAGE, NAGARKURNOOL, TELANGANA - 509209

NALGONDA

2846. PAVAN MOTORS PVT LTD (--01), CHERLAPALLY VILLAGE, NALGONDA ROAD, NALGONDA - 508001

NARAYANKHED

2847. VARUN MOTORS PVT LTD (--01), D. NO. 1-6-111/25/B/5/A/1, SY NO. 57/2, BHUMAN COLONY, GRAM PANCHAYAT & MANDAL - NARAYANKHED, DISTRICT – MEDAK, TELANGANA. - 502286
PH :9885210555.

NARAYANPET

2848. SRI JAYARAMA MOTORS PVT LTD (--01), SURVEY NO. 468/4, MAHABUBNAGAR ROAD, NARAYANPET TOWN, DIST.-MAHABUBNAGAR, STATE - TELANGANA. - 509210

NARSAMPET

2849. ADARSHA AUTOMOTIVES PVT LTD (--01), OPP. TRIVENI JUNIOR COLLEGE, WARANGAL TO NARSAMPET HIGHWAY - 506132

NARSAPUR

2850. KALYANI MOTORS PRIVATE LIMITED (--01), SURVEY NO 66, BLOCK NO-19,NARSAPUR,DISTRICT:MEDAK, TELANGANA. - 534275
PH :9100067766.

NELLAKONDAPALLI

2851. VARUN MOTORS PVT LTD (--01), SY.NO. 211 ,212 AT KUSUMANCHI ROAD , NELAKONDAPALLI ,KHAMMAM DISTRICT, TELANGANA - - 507160

NIRMAL

2852. ADARSHA AUTOMOTIVES PVT LTD (--02), SURVEY NO: 1246/1,1247 & 1248 , SHASTRI NAGAR, NIRMAL, TELANGANA.

H. NO. 1-1-131, ,SHASTRINAGAR, ,MANCHIRIAL ROAD, DISTT. ADILABAD, NIRMAL - 504106
PH :8886342222.

NIZAMABAD

2853. VARUN MOTORS PVT LTD (--01), PLOT NO. GP 1-57/4/1,PANGARA BORGOAN,NIZAMABAD - 503230

PALAKURTHY

2854. WIN MOTORS (A UNIT OF BHADRAKALI AUTOCARE PVT LTD) (--01), SURVEY NO 537/B,MAIN RAOD, PALAKURTHY,JANGAON DISTRICTTELANGANA. - 506317
PH :8688838005.

PALWANCHA

2855. VARUN MOTORS PVT LTD (--01), SURVEY NO.758 & 757, NEHRU NAGAR, PALWANCHA (NEW POLANCHA) MANDAL & TOWN, BHADRADRI KOTHAGUDEM DISTT., TELANGANA. - 507115
PH :8297163222.

PARGI

2856. VARUN MOTORS PVT LTD (--01), HOUSE NO. 2-356 JANGAIAH COMPLEX, SURVEY NO. 217/EE4, JAYANTHI NAGAR COLONY, MANDAL – PARGI, DISTRICT – RANGA REDDY. - 510501

PARKAL

2857. ADARSHA AUTOMOTIVES PVT LTD (--01), SY.NO 946, H.NO 5-27, VIKAS NAGAR, PARKAL,WARANGAL. - 506164
PH :8886742222.

PEDAPALLY

2858. ADARSHA AUTOMOTIVES PVT LTD (--01), SURVEY NO 142, H NO 185, RANGAMPALLI VILLAGE, PEDDAPALLI , TELANGANA - 505172

PILERU

2859. VISHNU CARS PVT LTD (--01), VISHNU CARS PVT LTD, BESIDE NAGI REDDY FUNCTION HALL, PILERU, MUDUPULAVEMULA, ANDHRA PRADESH - 517214

RAMAGUNDAM

2860. ADARSHA AUTOMOTIVES PVT LTD (--01), 5-6-172 SURVEY NO. – 259/B, MEDIPALLY SHIVAR, RAMAGUNDAM MUNICIPALITY, DISTRICT – KARIM NAGAR, ANDHRA PRADESH - 505209
PH :8886144550.

RAMAYAMPET

2861. VARUN MOTORS PVT LTD (--01), SURVEY NO. 1626 & 1626/2 SITUATED AT BLOCK NO. 16, RAMAYAMPET, DISTRICT – MEDAK. - 502101

SADASHIVA NAGAR

2862. VARUN MOTORS PVT LTD (--01), #17-48/C,NH-44,MAIN ROAD, BESIDE GEEENBAVARCHI, SADASHIVNAGAR - 503145

SADHASHIVPET

2863. SAI SERVICE PRIVATE LIMITED (--01), PLOT NO. 2, SY NO. 974, GURUNAGAR COLONY, OLD BOMBAY HIGHWAY ROAD, SADASHIVPET, SANGAREDDY DIST. 502291. - 502291
PH :9966377888.

SANGAREDDY

2864. SAI SERVICE PRIVATE LIMITED (1011--05), H.NO.4-8-92/1/4/5, AHMED NAGAR, OPP.GOVT.ITI, SANGAREDDY, MEDAK (DIST), ANDHRA PRADESH - 502001
PH :7661811000.

SATUPALLI

2865. MITHRA AUTO AGENCIES PVT LTD (--01), SURVEY NO. 75 NEAR VIVEKANANDA STATUE,SATHUPALLI, KHAMMAM. - 507303
PH :9848988312.

SECUNDERABAD

2866. ACER MOTORS (A DIVISION OF KRISHNAIAH MOTORS PVT LTD) (--01), A1, MOTI VALLEY,TRIMULGHERRY,SECUNDERABAD, - 500015

2867. AUTOFIN LIMITED (--01), SURVEY NO. 33, MEDCHAL ROAD, BOWENPALLY, SECUNDERABAD - 500011
PH :8885040130.

2868. VARUN MOTORS PVT LTD (4603--0I), 1-10-176/1, BEHIND VARUN TOWERS-I, OPP. HYDERABAD PUBLIC SCHOOL, BEGUMPET, SECUNDERABAD, HYDERABAD, TELANGANA STATE. - 500016
PH :9985552452.

2869. POPULAR VEHICLES AND SERVICES LIMITED (1088--04), PLOT NO. 207, TADBUND, SECUNDERABAD. - 500009

2870. PAVAN MOTORS PVT LTD (--02), PLOT NO. 1-12, 749, 750, SURVEY NO. 751/2, VENKATADRI NAGAR, NEW MIRJALGUDA, MALKAJGIRI, SECUNDERABAD, TELANGANA - 500047
PH :9121293690.

SHAD NAGAR

2871. SRI JAYARAMA MOTORS PVT LTD (--01), SERVEY NO.445, FAROOQ NAGAR, SHADNAGAR, MAHABUB NAGAR DISTT. ANDHRA PRADESH. - 500216
PH :8096996671.

SHAMIRPET

2872. POPULAR VEHICLES AND SERVICES LIMITED (--01), SHED NO 2-242, MAJEEDPUR CROSS ROADS,SHAMIRPET, MEDCHAL-MALKAJGIRI,TELANGANA - 500078

SHANKARPALLY

2873. SAI SERVICE PRIVATE LIMITED (--01), SURVEY NO. 203, HYDERABAD ROAD OPP. SM FUNCTION HALL ROAD, SHANKARPALLY, RANGA REDDY DISTT. - 501203

SIDDIPET

2874. ADARSHA AUTOMOTIVES PVT LTD (--01), SURVEY 197/A, VILLAGE – PONNALA, SIDDIPET, DISTRICT – MEDAK, TELANGANA. - 502103

SIRCILLA

2875. ADARSHA AUTOMOTIVES PVT LTD (--01), H. NO. 10-1-7/2, 10-1-7/3, 10-1-7/3/A/1, KARIMNAGAR ROAD, SIRCILLA, DISTRICT – KARIMNAGAR, TELANGANA - 505301

SURYAPET

2876. PAVAN MOTORS PVT LTD (--01), SURVEY NO. 493, THALLAGADDA, SURYAPET MANDAL, NALGONDA DISTRICT, ANDHRA PRADESH. - 508213

TALLADA

2877. MITHRA AUTO AGENCIES PVT LTD (--01), SURVEY NO 890/A, D.NO 7-8, NARAYANAPURAM, TALLADA, TELANGANA - 507167
PH :9848988312.

TANDUR

2878. VARUN MOTORS PVT LTD (--01), H. NO. 2-1-20/3, 2-1-20/3/A & 2-1-20/9, PLOT NO. 45, 46, 47, SURVEY NO. 57 OF MALREDDYPALLY VILLAGE, TANDUR MUNICIPALITY, VIKARABAD DISTRICT, TELANGANA. - 501141
PH :8886619370.

THIMMAPUR

2879. KALYANI MOTORS PRIVATE LIMITED (--01), SY NO.51/LUU, THIMMAPUR VILLAGE , KOTHUR MANDAL, RANGAREDDY, TELANGANA - 509325

THORRUR

2880. ADARSHA AUTOMOTIVES PVT LTD (--01), SURVEY NO.1 TO 5, BEARING M. NO.4-153/1, VILLAGE & MANDAL THORRUR DISTT. WARANGAL - 506163

TOOPRAN

2881. ADARSHA AUTOMOTIVES PVT LTD (--01), PLOT NO 7&8, SY NO 185,184,179U, NAGULAPALLY VILLAGE,TOOPRAN MANDAL,TELANGANA STATE: TELANGANA CITY: TOOPRAN PIN : 502334 CITY CATEGO - 502334

UTNOOR

2882. ADARSHA AUTOMOTIVES PVT LTD (--01), OPP., KB COMPLEX, UTNOOR, DIST- ADILABAD

VARNI

2883. VARUN MOTORS PVT LTD (--01), H.NO.9-54/1, SATYA NARAYANA PURAM,VARNI, - 503201

VEMULWADA

2884. ADARSHA AUTOMOTIVES PVT LTD (--01), SURVEY NO 438,NAMPALLI, VEMULWADA VILLAGE, RAJANNA SIRCILLA-DISTRICT, TELANGANA - 505302

VIKARABAD

2885. GEM MOTORS (INDIA) PVT LTD (--01), SHOP NO. 3-2-93/2, VILLAGE – YENNAPALLY, VIKARABAD MUNCIPALITY, VIKARABAD, DISTRICT – RANGA REDDY, TELANGANA . - 501101
PH :9912349840.

VM BANJAR

2886. MITHRA AUTO AGENCIES PVT LTD (--01), DOOR NO 6-101/1, VM BANJAR VILLAGE, NEAR RTC BUS STAND, PENUBALLY MANDAL, KHAMMAM - 507302

WANAPARTHY

2887. SRI JAYARAMA MOTORS PVT LTD (--01), SURVEY NO.1149, KURNOOL ROAD, WANAPARTHY (A.P.) - 509103
PH :8096903879.

WARRANGAL

2888. ADARSHA AUTOMOTIVES PVT LTD (--02), PLOT NO.10, INDUSTRIAL AREA, MULUGU ROAD, WARRANGAL - 506007
PH :8886132222.

2889. ADARSHA AUTOMOTIVES PVT LTD (--03), OPPOSITE TO ORUGALLU FILLING STATION, HUNTER ROAD, SHAYAMPET, HUNAMKONDA, WARANGAL - 506001
PH :8886492222.
2890. WIN MOTORS (A UNIT OF BHADRAKALI AUTOCARE PVT LTD) (--01), SURVEY NO. 16, 16/A & 16/B, OPPOSITE KAKATIYA UNIVERSITY GATE-2, LASHKERSINGARAM REVENUE VILLAGE, HANAMKONDA MANDAL, WARANGAL. - 506001
PH :8688828010.
2891. WIN MOTORS (A UNIT OF BHADRAKALI AUTOCARE PVT LTD) (--02), PLOT NUMBER 9,10,11 & 13/A ,SURVEY NUMBER 148/A&B OF BHEEMRAM VILLAGE, WARANGAL. - 506015
PH :8688828015.
2892. ADARSHA AUTOMOTIVES PVT LTD (--05), SY.NO742/A,753, 100FEETROAD,WADEPALLY,HANAMKONDA,WARANGAL, TELANGANA STATE - 506001

YELLANDU

2893. VARUN MOTORS PVT LTD (--01), 15-129, BESIDE SBI SUDIMALA BRANCH, MAIN ROAD, YELLANDU, BHADRADRI, - 507101

ZAHIRABAD

2894. SAI SERVICE PRIVATE LIMITED (--01), PLOT NO-5,NEAR IBP PETROL BUNK, NH-9,ALIPUR,ZAHIRABAD,MEDAK (DIST),ANDHRA PRADESH - 502220
PH :7660005206.

TRIPURA

AGARTALA

2895. JAIN UDYOG (6901-69-01), ARUNDHUTI NAGAR, OPP. INDUSTRIAL ESTATE, AGARTALA - 799003
PH :9862149275.
2896. JAIN UDYOG (6901-69-05), 58-B/C, INDUSTRIAL AREA ARUNDHATI NAGAR, AGARTALA. - 799003
2897. JAIN UDYOG (6901-69-06), KHATIAN NO. 1843, MOUJA & TEHSIL – KHAYERPUR, JIRANIA SUBDIVISION, AGARTALA - 799008
2898. PALLAVI MOTORS PVT LTD (6902-69-01), 44 NH ROAD, DAG NO. 495, DAG NO. 1748, DAG NO. 867, POST OFFICE KHERPUR, AGARTALA (TRIPURA) - 799008
PH :9864052488.

AMARPUR

2899. JAIN UDYOG (--01), NEAR MOTOR STAND, AMARPUR,TRIPURA - 799101

AMBASSA

2900. JAIN UDYOG (--01), A.A. ROAD, OPPOSITE OF CHANDRAI PARA HS SCHOOL, AMBASSA, DHALAI, TRIPURA. - 799289

BELONIA

2901. JAIN UDYOG (--01), SUKANTA NAGAR, S.B.C NAGAR, BANKAR, BELONIA, PIN-799155, TRIPURA - 799155

DAMCHERA

2902. PALLAVI MOTORS PVT LTD (--01), DAMCHERRA, NARENDRA NAGAR NORTH TRIPURA - 799256

DHARMANAGAR

2903. JAIN UDYOG (6901--03), DHARMANAGAR COLLEGE ROAD, DHARMANAGAR, TRIPURA(NORTH). - 799250

KAMALPUR

2904. PALLAVI MOTORS PVT LTD (--01), KAMALPUR, NEAR MANIKVHANDER BAZAR,, KAMALPUR AMBASSA ROAD, - 799285

KANCHANPURA

2905. PALLAVI MOTORS PVT LTD (--01), KANCHANPUR, URICHERRA JUMPUI ROAD , TRIPURA 799270 - 781352

KUMARGHAT

2906. PALLAVI MOTORS PVT LTD (--01), UTTAR PABIA CHERRA KUMARGHAT, M/C WARD NO.06,UNOKOTI - 799264

MANU

2907. PALLAVI MOTORS PVT LTD (--01), MANU, MAIN BAZAR, DHALAI TRIPURA 799275 - 799275

NORTH LAKHIMPUR

2908. VISHAL CAR WORLD PVT LTD (--01), VILL-CHARAIMORIA (MOIDOMIA), IST-NORTH-LAKHIMPUR, STATE-ASSAM - 787001

SABROOM

2909. JAIN UDYOG (--01), VILL- PASCHIM JALEFA, TAHESIL- HARINA, SABROOM SOUTH TRIPURA, PIN-799145 - 799145

SANTIBAZAR

2910. PALLAVI MOTORS PVT LTD (--01), SANTIBAZARM NEAR SDM OFFICE,, SOUTH TRIPURA, - 799144

TELIAMURA

2911. PALLAVI MOTORS PVT LTD (--01), SOUTH KARAILONG,, PACHIM TELIAMURA, TRIPURA, - 799201

UDAIPUR

2912. JAIN UDYOG (--01), DHWAJANAGAR INDUSTRIAL ESTATE,UDAIPUR,TRIPURA (SOUTH) - 799116
PH :9774020152.

UTTAR PRADESH

AFZALGARH

2913. SHAKUMBARI AUTOMOBILES PVT LTD (--01), VILL FATEHULLANAGAR,AFZAL GARH MARH,, NH-74,AFZALGARH,TEHSIL DHAMPUR, - 246722

AGRA

2914. KTL PVT LTD (6606-66-01), MUGHAL ROAD, KAMLA NAGAR, AGRA - 282004
2915. PREM MOTORS PVT LTD (--01), 45, OPPOSITE AGRA COLLEGE, GOKULPURA, AGRA, UTTAR PRADESH - 282002
PH :9690010799.
2916. KTL PVT LTD (6606--02), KHASRA NO. 171, SEWLA JAT, GWALIOR ROAD, AGRA, UTTAR PRADESH - 282001
PH :8449715099.
2917. MERAK VEHICLES (A UNIT OF ONE 3 VENTURES) (6609-66-01), KHASRA NO 65 & 74, MAUZA MOHAMMADPUR, AGRA-DELHI ROAD (NH-2), SIKANDRA, AGRA UTTAR PRADESH-282007. - 282007
PH :9690486139.

AJITMAL

2918. KULDEEP MOTORS PVT LTD (--01), MUGHAL ROAD AJITMAL, DIST : AURAIYA - 206121

AKBARPUR

2919. KTL PVT LTD (2801--03), KANPUR ROAD, AKBARPUR - 209206
PH :7408409348.
2920. SMARTWHEELS PRIVATE LIMITED (7201--08), TANDA ROAD, VILL-BUDHAEEPUR, PO-KATRIYA YAKOOBPUR, AKBARPUR , DIST-AMBEDKAR NAGAR (U.P.) - 224122
PH :7705803248.

ALIGANJ

2921. DEV MOTORS PVT LTD (--01), KAYAMGANJ ROAD, ALIGANJ, ETAH, - 226024

ALIGARH

2922. DEV MOTORS PVT LTD (--01), NEAR BANNA DEVI, G.T.ROAD, ALIGARH - 202001
2923. DEV MOTORS PVT LTD (--04), PLOT NO 97, VILLAGE SIKANDERPUR, BHUKRAVALI, GT ROAD BYE PASS, ALIGARH - 202002
PH :7351345577.

ALLAHABAD

2924. AMITDEEP MOTORS PVT LTD (2901-29-01), 26 SULEM SARAI, G.T ROAD, ALLAHABAD - 211001
2925. SARASWATI MOTORS LLP (2904-29-01), PLOT NO 24, INDUSTRIAL AREA MNIT COLLEGE, TELIYARGANJ, PRAYAGRAJ, UTTAR PRADESH. - 211004
PH :8090854053.
2926. BRIGHT 4 WHEEL SALES PRAYAGRAJ PRIVATE LIMITED (2905-29-01), ARAZI NO 390 AND 389 AT KATKA, ANDAWA SAHSON BYPASS, PRAYAGRAJ - 211002
PH :9415324201.
2927. SARASWATI MOTORS LLP (2904-29-02), 342, BHAGIPUR, SARAI INAYAT, ANDWA,JHUNSI, PRAYAGRAJ - 211019
2928. BRIGHT 4 WHEEL SALES PRAYAGRAJ PRIVATE LIMITED (2905-29-02), 46, DANDI REWA ROAD, OPPOSITE H.P JANTA PETROL PUMP, PRAYAGRAJ, UTTAR PRADESH. - 211008

AMETHI

2929. KTL AUTOMOBILE PRIVATE LIMITED (--01), PLOT NO – E 32, INDUSTRIAL AREA TEKARIA, UPSIDC, GAURIGANJ, DIST: C.S.M.NAGAR - 227409
PH :7379557377.

AMRITPUR

2930. KULDEEP MOTORS KANPUR LLP (--01), TEHSIL ROAD NEAR TEHSIL BHAWAN, AMRITPUR, DISTRICT FARRUKHABAD, UTTAR PRADESH - 209622

AMROHA

2931. AKANKSHA AUTOMOBILES PVT LTD (--01), AMROHA – JOYA ROAD, NEAR PUNJAB NATIONAL BANK, AMROHA, UTTAR PRADESH, PIN CODE: 244221 - 244221
PH :7247800064.

ANPARA

2932. STAR CARS (A UNIT OF SARASWATI VEHICLES LLP) (--01), KAHUWA NALA, AURI-BINA ROAD, AURI ANPARA, DISTRICT – SONEBHADRA. - 232101

ANUPSHAHR

2933. SKUNIVERSE AUTOMOBILE PVT LTD (--01), KHASRA NO. 341, BULANDSHAHR ROAD, ANOOPSHAHR, DIST. BULANSHAHR, PIN-203390, UTTAR PRADESH - 203390
PH :7055118430.

AONLA

2934. KAVISHA MOTORS PVT LTD (--01), COMMERCIAL PLOT, RAN NAGAR ROAD, NEAR MUNICIPALITY OFFICE, TEHSIL - AONLA. DIST., BAREILLY, STATE- UTTAR PRADESH. - 243301

ATARRA

2935. MY CAR PVT. LTD. (--01), 14/292, AZAD NAGAR,, ATTARA, BANDA, - 210201

ATRAULI

2936. DEV MOTORS PVT LTD (--01), GATA NO. 126 TEHSIL ATRAULI NEAR HARIYAL, CENTER MOJA MADHAULI NISFI ASHARABAD - 202280

AURAI

2937. VARANASI MOTORS PVT LTD (--01), KHATA / KHATAUNI NO. 00045, GT ROAD (EHAK BHAURA), OPP. CHINI MILL,VILLAGE & TEHSIL AURAI, DISTT: BHADHOI, UTTARPRADESH, PIN 2221 301 - 2221301

AURAIYA

2938. KULDEEP MOTORS PVT LTD (--01), NEAR INDIAN OIL TIRAHA, KANPUR ROAD, AURAIYA. - 206241
PH :9235358444.

AZAMGARH

2939. DEEP MOTORS (--01), HARBANSHPUR NARAULI, AZAMGARH - 276001
PH :9838072905.

2940. DEEP MOTORS (--04), VILLAGE – BALDEV MADURI, TEHSIL – SAGRI, DISTRICT – AZAMGARH, UTTAR PRADESH. - 276138

BABRALA

2941. AKANKSHA AUTOMOBILES PVT LTD (--01), CHANDAUSI ROAD, BABRALA, DISTRICT SAMBHAL, UTTAR PRADESH. - 243751
PH :7895600005.

BACHRAWAN

2942. KTL AUTOMOBILE PRIVATE LIMITED (--01), VISHNUPUR, PHARWAN, RAEBARELI-LUCKNOW ROAD, DIST. -RAEBARELI. - 229301
PH :99184512222.

BAH

2943. KTL PVT LTD (--01), 16B, DHOBAIR, VILLAGE - BAH, DIST.-AGRA, UTTAR PRADESH. - 283104

BAHERI

2944. KAVISHA MOTORS PVT LTD (--01), KASRA NO. 530, 531, 532, 533. NAINITAL ROAD, OPP. RAMLILA GROUND, BAHERI, DISTRICT – BAREILLY, UTTAR PRADESH - 243201

BAHRAICH

2945. ANAND MOTOR AGENCIES LTD (1301--05), LUCKNOW ROAD,BEHRAICH,UTTAR PRADESH - 271801
PH :9519596080.

BAKSHI KA TALAB

2946. BRIGHT 4 WHEEL SALES PVT LTD (1305--04), PLOT NO: 57 TO 60, KAUSHALABAD, BADHAULI BKT, PARGANA MOHANNA, SITAPUR ROAD, BAKSHI KA TALAB, LUCKNOW - 226020
PH :7317049000.

BALLIA

2947. DEEP MOTORS (--03), MAIDEYPUR, RAJDHANI ROAD, BALLIA - 277001
PH :9838072917.

BALRAMPUR

2948. ANAND MOTOR AGENCIES LTD (--01), NEAR BALRAMPUR CHINI MILLS, GONDA ROAD,BALRAMPUR-UTTAR PRADESH - 271201
PH :6307995976.

BANDA

2949. MY CAR PVT LTD (2803--03), KALUKUAN, TINDWARI ROAD, BANDA - 210001
PH :9792971223.

2950. SUMITRA DS MOTORS PVT LTD (--01), PURANPUR ROAD, BANDA, TEHSIL BANDA, THANA BANDA, DISTT. SHAHJAHANPUR – U.P. - 242042

2951. MY CAR PVT LTD (--02), ARAZI NO 1180 & 1181, LADAKAPURWA, TINDWARI ROAD, BANDA, UTTAR PRADESH - 210001

BANSI

2952. ARBIT AUTOMOBILES PVT LTD (--01), KHASRA NO. 66 M, GRAM: BHAWNI, TAPPA: KUNDARANA, PARGANA: BANSI EAST, TEHSIL BANSI, DISTT : SIDARTHNAGAR - 272153

BANTHRA

2953. MEGA MOTORS (A UNIT OF AKM MOTORS PVT LTD) (--01), KHASRA NO.1628 AMARPUR, SIKANDARPUR MARKET, BANTHRA, KANPUR ROAD LUCKNOW - 226401
PH :9919101456.

2954. ONE UP MOTORS INDIA PVT LTD (1306--05), KHASRA NO. 1166, KHANDEDEV, KANPUR ROAD, BANTHRA, LUCKNOW - 226401

BARABANKI

2955. BRIGHT 4 WHEEL SALES PVT LTD (1305--03), VILL. DHARSANIA, LUCKNOW ROAD, NAWABGANJ, BARABANKI - 225001
PH :9838075960.

BARAUT

2956. TANYA AUTOMOBILES PVT LTD (--01), 240/2 SHAHPUR-BADOLI, DELHI SAHARANPUR ROAD, BARAUT, BAGHPAT, UTTAR PRADESH. - 250611
PH :7055300019.

BAREILLY

2957. CORAL MOTORS (P) LTD (5602-56-01), STATION ROAD, BAREILLY - 243001

2958. CORAL MOTORS (P) LTD (5602-56-03), PILIBHIT BYE PASS ROAD, EXECUTIVE CLUB CROSSING, BAREILLY, UTTAR PRADESH - 243002

2959. KAVISHA MOTORS PVT LTD (5601-56-01), 4TH KM, RAMPUR ROAD, CLUTTER BUCKGANJ, BAREILLY - 243502

2960. NANDINI MOTORS (A UNIT OF PARK LANE ENTERPRISES PRIVATE LIMITED) (5604-56-01), APEX MULTISPECIALITY HOSPITAL PILIBHIT BYPASS RD BAREILLY - 243001

BARHAJ

2961. SMARTWHEELS PRIVATE LIMITED (--01), VILL. -LAWARCHHI,, BARHAJ DEORIA ROAD, - 274601

BARHAN

2962. KTL PVT LTD (--01), VILLAGE BARHAN, ETMADPUR, AGRA, UTTAR PRADESH. - 283201

BASTI

2963. SMARTWHEELS PRIVATE LIMITED (7201--05), MANORI CHAURAHA, DUMARIYA GANJ ROAD, BASTI - 270002

2964. ARBIT AUTOMOBILES PVT LTD (7203-72-03), SANSARPUR FUTAHIA POST GANDHI NAGAR DISTRCIT BASTI UTTAR PRADESH - 272182
PH :8953412821.

BEHTA

2965. MEGA MOTORS (A UNIT OF AKM MOTORS PVT LTD) (--01), KHASRA NO. 254, OPPOSITE SANGAM MOTORS, KURSI ROAD, BEHTA - 226026
PH :6388901514.

BELA

2966. KULDEEP MOTORS LUCKNOW PVT LTD (--01), TIRWA ROAD BELA,DISTRICT AURAIYA U.P. - 206251

BHADOHI

2967. VARANASI MOTORS PVT LTD (8402--02), VARNASI ROAD, BHADOHI - 221401
PH :9838360662.

BHARTANA

2968. KULDEEP MOTORS PVT LTD (--01), RAJA GANJ,BHARTANA,DISTRICT ETAWAH - 206242

BHINGA

2969. ANAND MOTOR AGENCIES LTD (--01), PATNAKHARGAURA, BHINGA, SHRAVASTI - 271831
PH :9415013059.

BHOGNIPUR

2970. KULDEEP MOTORS KANPUR LLP (--01), NEAR CHANDRA PETROL PUMP,KANPUR JHANSI ROAD,TEHSIL BHOGNIPUR,KANPUR DEHAT,UP - 209112

BHOJPUR

2971. MOTORCRAFT SALES PVT LTD (--01), OPPOSITE PRIMARY GOVERNMENT SCHOOL, HAPUR ROAD, VILLAGE BHOJPUR, TEHSIL – MODINAGAR, DISTRICT – GHAZIABAD. - 201204
PH :9410038456.

BIJNOR

2972. MEGA MOTORS (A UNIT OF AKM MOTORS PVT LTD) (--01), KHASRA NO. 1573, NEAR GROUP CENTRE, CRPF, CAMP, BIJNORE, LUCKNOW, PIN-226002, UP - 226002

BIJNORE

2973. SHAKUMBARI AUTOMOBILES PVT LTD (--01), PLOT & KHASRA NO. 253/3 & 258/1 ADJACENT KHEDI CHAURAHA, NEAR PULKIT HOSPITAL, DELHI-BIJNOR HIGHWAY, BIJNOR, DIST. – BIJNOR, UTTAR PRADESH. - 246701
PH :8630881409.

BILARI

2974. AKANKSHA AUTOMOBILES PVT LTD (--01), 2KM-BILARI NH 509, NEAR SBS SCHOOL, BILARI, MORADABAD 244001 - 244001
PH :7900600008.

BILASPUR-UP

2975. AKANKSHA AUTOMOBILES PVT LTD (--01), NH-87 ,OPPOSITE SHAGUN BANQUET HALL, NEAR MILTON ACADEMY SCHOOL, RAMPUR NAINITAL ROAD, BILASPUR, DISTRICT – RAMPUR. - 244921
PH :9105370007.

BISALPUR

2976. CORAL MOTORS (P) LTD (--01), KHASRA NO. 668, VILLAGE : BISALPUR, DISTT: PILIBHIT, UTTAR PRADESH - 262201
PH :9837891846.

BISWAN

2977. CONCEPT CARS LIMITED (--01), BILJHARIYA, OPPOSITE-555, BRICK FIELD, BISWAN - 261201 - 261201
PH :7607696666.

BUDAUN

2978. CORAL MOTORS (P) LTD (5602--04), PLOT NO.-72, BAREILY-MATHURA HIGHWAY, BUDAUN, UTTAR PRADESH - 132103
PH :9837891846.

BUDHANA

2979. RADHA GOVIND AUTOMOBILES PVT LTD (--01), BARAUT ROAD,, NEAR BALWALA POLICE STATION, - 251309

BULANDSHAHR

2980. SKUNIVERSE AUTOMOBILE PVT LTD (--01), KHASRA NO 561 , BHOOR, OPP PANDIT PETROL PUMP , BULANSHAHR - 203001
PH :9219694600.

2981. SKUNIVERSE AUTOMOBILE PVT LTD (--02), KHASRA NO.2261, NEAR T POINT , BYPASS SIKARPUR ROAD ,BULANDSHAHR - 203001
PH :7055118430.

CHAIL

2982. SARASWATI MOTORS LLP (--01), MAUJA CHAIL, TEHSIL CHAIL, KAUSHAMBI, UTTAR PRADESH - 212202

CHAKARNAGAR

2983. KULDEEP MOTORS PVT LTD (--01), RAJPUR ROAD, CHAKARNAGAR, DISTT : ETAWAH - 206125

CHAKIA

2984. STAR CARS (A UNIT OF SARASWATI VEHICLES LLP) (--01), KATHSILA NAHER, NEAR SAINT JOHN'S SCHOOL CHAKIA, DISTRICT – CHANDAULI. - 232101
PH :9450544961.

CHANDAUSI

2985. AKANKSHA AUTOMOBILES PVT LTD (--01), AZAD ROAD, NEAR ROADWAYS, CHANDAUSI (BHEEM NAGAR) - 202412
PH :7248000002.

2986. AKANKSHA AUTOMOBILES PVT LTD (--02), PATHRA CHOWK, BADAUN ROAD (NEAR INDIAN OIL FILLINGSTATION), CHANDAUSI, DISTRICT SAMBHAL, UTTAR PRADESH - 202414. - 202414

CHAURE BAZAR

2987. SMARTWHEELS PRIVATE LIMITED (--01), PLOT NO 366, GRAM CHAURE CHANDAULI, CHAURE BAZAAR, BIKAPUR TEHSIL, DISTT AYODHYA - 224209

CHAURI CHAURA

2988. ARBIT AUTOMOBILES PVT LTD (--01), ARAZI NO 561 DOMARI KHURD, CHAURI CHAURA, GORAKHPUR - 273201
PH :8953412821.

CHIBRAMAU

2989. KTL PVT LTD (--01), PLOT GHATA NO. 70, MAUJA - LALAKPUR, VILLAGE - CHHIBRAMAU, DIST.-KANNAUJ, UTTAR PRADES. - 209721

CHITRASENPUR

2990. AGR AUTOMOBILES PVT LTD (--01), KHASRA NO-194,CHITRASENPUR, KACHHUWA ROAD, VARANASI, PIN -221313 - 221313
PH :9889803355.

COLONELGANJ

2991. SMARTWHEELS PRIVATE LIMITED (--01), OPPOSITE BHARAT PETROL PUMP, PIPRI, COLONELGANJ, DISTT- GONDA, UTTAR PRADESH - 271502

DADRI

2992. RANA MOTORS PVT LTD (--01), KHASRA NO -1242, KHATONI NO – 56, VILLAGE DHOOM MANIKPUR, DADRI, UTTAR PRADESH - 203207

DALMAU

2993. KTL AUTOMOBILE PRIVATE LIMITED (--01), DALMAU ROAD, OPPOSITE BHAGIRATHI GUEST HOUSE - 229203
PH :9918451222.

DANKAUR

2994. MOTORCRAFT SALES PVT LTD (--01), OPP. SHRI DRONACHARYA DEGREE COLLEGE, DANKAUR, DIST. - GAUTAM BUDH NAGAR, HARYANA. - 203201
PH :9810289355.

DEBAI

2995. SK UNIVERSE AUTOMOBILE PRIVATE LIMITED (--01), KHASRA NO. 299/2, SABALPUR DEBAI DISTT, BULANDSHAHR - 203393

DEOBAND

2996. ATELIER AUTOMOBILES (--01), OPPOSITE CIVIL COURT, MUZZAFARNAGAR HIGHWAY, DEOBAND - 247001
PH :7500220011.

DEORIA

2997. SMARTWHEELS PRIVATE LIMITED (--01), CFC BUILDING, INDUSTRIAL ESTATE, DEORIA, DISTRICT DEORIA, UTTAR PRADESH
PLOT NO. C-7, AND SHED NO. D-3, GOVERNMENT INDUSTRIAL ESTATE MEHRA, DEORIA, DIST.-DEORIA, UTTAR PRADESH. - 274001

2998. ARBIT AUTOMOBILES PVT LTD (--01), ARAZI NO 467 MI & 607 MAUJA SONUGHAT PARGANA SALEMPUR MAJHAULI, DEORIA, UTTAR PRADESH - 274001
PH :8953412821.

DERAPUR

2999. KTL PVT LTD (--01), VILLAGE - DERAPUR, KANPUR DEHAT, UTTAR PRADESH. - 209301

DHAMPUR

3000. SHAKUMBARI AUTOMOBILES PVT LTD (--01), KHASRA NO. 205, OPPOSITE, UHSA SMARAK SCHOOL, MORADABAD ROAD, TEHSIL - DHAMPUR, MOJA - ALEHPUR, DIST.-BIJNOR, UTTAR PRADESH. - 246761
PH :9675970960.

DHAURAHARA

3001. SUMITRA DS MOTORS PVT. LTD. (--01), DHAKHERWA ROAD, NEAR HAMID PETROL PUMPBPCL, DHAURAHRA, LAKHIMPUR KHERI - 262723

DIBYAPUR

3002. KULDEEP MOTORS PVT LTD (--01), AURAIYYA ROAD, DIBIYAPUR - 206244
PH :9235258425.

DOMARIAGANJ

3003. SMARTWHEELS PRIVATE LIMITED (--01), VILL & POST – CHAUKHARA, DOMARIAGANJ, DISTT – SIDDHARTH NAGAR - 272193
PH :7705800602.

ETAH

3004. DEV MOTORS PVT LTD (--01), GATA NO 685/4 VILL GIRORA, ETAH-KASGANJ ROAD, ETAH, UP - 207001
PH :7351345577.

ETAWAH

3005. KULDEEP MOTORS PVT LTD (--01), PAKKA BAGH, KANPUR ROAD, ETAWAH - 206001
PH :257029.

FAIZABAD

3006. SMARTWHEELS PRIVATE LIMITED (7201--02), SAHADAT GANJ, LUCKNOW ROAD, FAIZABAD, UTTAR PRADESH. - 224001
PH :7705803245.

3007. SMARTWHEELS PRIVATE LIMITED (7201-72-03), GHATAMPUR MAGALSI, OPP TRIMURTI HOTEL, TEHSIL SOHAWAL, FAIZABAD, UTTAR PRADESH - 224001
PH :7705800602.

FAKHARPUR

3008. ONE UP MOTORS INDIA PVT LTD (--01), GHASIPUR, FAKHARPUR, BAHRAICH (UP) - 271902
PH :9935275786.

FARIDPUR

3009. KAVISHA MOTORS PVT LTD (--01), GATE NO. 216, KASBA SARAI, TEHSIL – FARIDPUR, DISTRICT – BAREILLY, UTTAR PRADESH. - 243503

FARRUKHABAD

3010. MY CAR PVT LTD (2803--04), NEKPUR KALAN, FARRUKHABAD - 209625
PH :9792970093.

FATEHABAD

3011. KTL PVT LTD (--01), KHASRA NO. 730/731, GRAM MAUJA, MADAYNA SIKRARA MODE, FATEHABAD, DISTRICT – AGRA, UTTAR PRADESH - 283111
PH :8449710051.

FATEHPUR

3012. KTL PVT LTD (2801--04), NH-2, OPP. RTO OFFICE, KANPUR ROAD, FATEHPUR - 212601

3013. BRIGHT 4 WHEEL SALES PVT LTD (--01), GATA NO-637 VILL.ISRAULI, TEHSIL, FATEHPUR, BARABANKI - 212601

FAZILNAGAR

3014. SMARTWHEELS PRIVATE LIMITED (--01), NEAR BAGHAUCH GHAT TURN FAZILNAGAR, UTTAR PRADESH - 274401

FIROZABAD

3015. DEV MOTORS PVT LTD (--01), GATE NO.435, MOUJA-DHOLPURA, , NEAR ST JOHNS CHAURAHA, AGRA ROAD, FIROZABAD UTTAR PRADESH - 283203

GAJRAULA

3016. AKANKSHA AUTOMOBILES PVT LTD (--01), JHANAKPURI OPPOSITE RELIANCE PETROL PUMP, DELHI ROAD, GAJRAULA - 244235
PH :7895400003.

GARH MUKTESHWAR

3017. ROHAN MOTORS LTD (--01), "EAST WARD NO. 8, ADARSH NAGAR, GARH, MUKTESHWAR, DIST. HAPUR, PIN-245202 - 245202

GHATAMPUR

3018. MY CAR PVT LTD (--01), TRANSPORT NAGAR, NEAR INDIAN OIL PETROL, HAMIRPUR ROAD, GHATAMPUR, PIN-209206, - 208003

GHAZIABAD

3019. ROHAN MOTORS LTD (5904-59-01), 432 MUKAND NAGAR, G.T.ROAD, GHAZIABAD - 201001

3020. REGENT AUTOLINKS PVT LTD (5902-59-01), A-10/9 INDUSTRIAL AREA, SITE NO 3, MEERUT ROAD, GHAZIABAD - 201001

3021. ROHAN MOTORS LTD (5904--02), PLOT NO.46, MEERUT-DELHI ROAD, MORTA, GHAZIABAD - 201102

3022. T R SAWHNEY MOTORS PVT LTD (5905--01), PLOT N0. 96, RAJINDER NAGAR INDUSTRIAL AREA, MOHAN NAGAR, GHAZIABAD, DISTT. - GHAZIABAD, U.P. - 201007

3023. SNV AUTOMOBILES PVT LTD (5906-59-01), PLOT NO. 15, SOUTH SIDE GT ROAD INDUSTRIAL AREA, GHAZIABAD, UTTAR PRADESH - 201001 - 201001
PH :9650324325.

3024. GLOBUS AUTO LLP (5907-59-01), 139, PANDAV NAGAR, GHAZIABAD, PIN-201001, UTTAR PRADESH - 201001
PH :8588872804.

3025. GLOBUS AUTO LLP (-59-02), 139, PANDAV NAGAR, GHAZIABAD, PIN-201001 139, PANDAV NAGAR, GHAZIABAD, PIN-201001 - 201001

GHAZIPUR

3026. AGR AUTOMOBILES PVT LTD (8403--03), RKBK PETROL PUMP, NEAR BANSI BAZAR, GAZIPUR - 2333001
PH :2361136.

GHIROR

3027. KULDEEP MOTORS PVT LTD (--01), NEAR SSD COLLEGE, KARHAL ROAD, GHIROR, DISTRICT – MAINPURI, UTTAR PRADESH.
KARHAL ROAD, TEHSIL – GHIROR, DISTRICT – MAINPURI, UTTAR PRADESH.
PH :9536755555.

GOLA

3028. SMARTWHEELS PRIVATE LIMITED (--01), NEAR KANYA INTER COLLEGE, BHARASADA, GOLA, DISTT – GORAKHPUR, UTTAR PRADESH - 273408
PH :7705800602.

GONDA

3029. SMARTWHEELS PRIVATE LIMITED (7201--07), JANKI NAGAR, OPP INDIAN OIL DEPOT, BAHRAICH ROAD, GONDA, UTTAR PRADESH, - 271001
PH :7705803261.

GORAKHPUR

3030. SMARTWHEELS PRIVATE LIMITED (7201--01), MOHADDIPUR, (NEAR RAMGARH TAL), GORAKHPUR (U.P.) - 273012
PH :7705803152.

3031. SMARTWHEELS PRIVATE LIMITED (7201--06), NEAR T B HOSPITAL, LACHCHIPUR, NEPAL ROAD, GORAKHPUR - 273012
PH :7705803109.

3032. SMARTWHEELS PRIVATE LIMITED (7202--01), PLOT NO.AL-4, SECTOR-9, GIDA, GORAKHPUR. - 273209
3033. ARBIT AUTOMOBILES PVT LTD (7203-72-01), ARAZI NO. 66/1/1 MI & 66/2/1MI, 66 MI, MAUZA - MAHEWA MUSTAKIL, NEAR FALMANDI CHOWK, TRANSPORT NAGAR, GORAKHPUR, UTTAR PRADESH. - 273016
3034. ARBIT AUTOMOBILES PVT LTD (7203-72-1B), MEDICAL COLLEGE ROAD, NEAR SPORTS COLLEGE, GORAKHPUR, UTTAR PRADESH - 273016

GOSAIGANJ

3035. BRIGHT 4 WHEEL SALES PVT LTD (--01), KHASRA NO. 24, VILLAGE - SHEKHANPUR, PARGANA MOHANLALGANJ, TEHSIL - MOHANLALGANJ, DIST.-LUCKNOW, UTTAR PRADESH. - 226501
PH :9838075929.

GREATER NOIDA

3036. ROHAN MOTORS LTD (--01), 63-A, UDYOG VIHAR, GREATER NOIDA, UTTER PRADESH - 201306
3037. VIPUL MOTORS PVT LTD (--01), PLOT NO. 64, ECOTECH 12, GREATER NOIDA (WEST), UP. - 201009
PH :9811233385.

HAIDERGARH

3038. BRIGHT 4 WHEEL SALES PVT LTD (--01), PROPERTY SHOP NO. 5, 6 AND 7, VILLAGE - GOTAUNA, PARGANA - HAIDERGARH, TEHSIL - HAIDERGARH, DISTRICT - BARABANKI. - 225124

HAMIRPUR

3039. KTL PVT LTD (--01), VILLAGE RAMEDI,KANPUR ROAD, HAMIRPUR - 210301
PH :7704907587.

HAPUR

3040. ROHAN MOTORS LTD (--01), KHASRA NO – 2225 , BAHADUR DHARAM KANTA, NEAR SUPREME PETROL PUMP, GARH ROAD, HAPUR, UTTARPRADESH - 245101 - 245101

HARDOI

3041. CONCEPT CARS LIMITED (--01), NANAK GANJ, LUCKNOW ROAD, HARDOI - 241001
3042. CONCEPT CARS LIMITED (--04), PLOT NO. 1609 & 1605 GANGA BUX PURVA, BILGRAM ROAD, HARDOI KANPUR HIGHWAY, HARDOI, UTTAR PRADESH. - 241001

HARGAON

3043. CONCEPT CARS LIMITED (--01), SITAPUR TO LAKHIMPUR ROAD, NEAR HARGAON DRAM KANTA KESHRUWA, TEHSIL. HARGAON, DIST. SITAPUR, UTTAR PRADESH. - 261121

HATHRAS

3044. DEV MOTORS PVT LTD (--03), NEAR NAGLA UMMED, ALIGARH ROAD, HATHRAS - 204101
PH :9917435500.

IGLAS

3045. DEV MOTORS PVT LTD (--01), MATHURA ROAD, IGLAS, DISTRICT ALIGARH. - 202124
PH :9837549000.

ITUNJA

3046. BRIGHT 4 WHEEL SALES PVT LTD (--01), 90M GATA GRAM MANDOLI, ITTAUNJA, LUCKNOW, UTTAR PRADESH-226203. - 226203
PH :7011482503.

JAGATPUR

3047. KTL PVT LTD (--01), GATA NO.331, JOGMAGDIPUR POORE TAYN, NEAR MADRASA ROAD, LUCKNOW PRAYAGRAAJ HIGHWAY, JAGATPUR, 229402 - 229402

JAGDISHPUR

3048. BRIGHT 4 WHEEL SALES PVT LTD (--01), KATHORA,MUSAFIRKHANA,LUCKNOW SULTANPUR ROAD,JAGDISPUR-UTTAR PRADESH - 227817

JAGNER

3049. MERAK VEHICLES (A UNIT OF ONE 3 VENTURES) (--01), SHRI RAM GARDEN, AGRA ROAD, NEAR RADHA KRISHNA MANDHIR, JAGNER, UTTAR PRADESH, 283115 - 283115
PH :7896500400.

JALALABAD

3050. SUMITRA DS MOTORS PVT LTD (--01), GRAM: SUJAWALPUR, BARIELLY ROAD, TEHSILL: JALALBAD, DIST. SHAHJHANPUR - 242221

JALALPUR

3051. SMARTWHEELS PRIVATE LIMITED (--01), SURHURPUR, TEHSIL - JALALPUR, UTTAR PRADESH - 224149

JALAUN

3052. KULDEEP MOTORS KANPUR LLP (--01), PARSHURAM NAGR, JALAUN KONCH ROADJALAUN, UTTAR PARDESH - 285123

JAUNPUR

3053. KIRTI KUNJ AUTOMOBILES PVT LTD (--01), KHANPUR AKBAR, KUTTUPUR TIRAHA - 222001
PH :9554951026.

JHANSI

3054. SURI AUTOMOBILES (6001-60-01), BALAJI UNNA ROAD, ANSAL COLONY, JHANSI PIN – 284002. - 284002
PH :8881811383.
3055. VELOCITY CARS (A UNIT OF BASERA VELOCITY AUTOHUB PVT LTD) (6002--01), PLOT NO 486, 487, 488, 489 AND 477 (PATTA NUMBERS), MAUZA - KOCCHABHANWAR, BLOCK - BADAGAON, TEHSIL AND DISTT - JHANSI. - 284128

KAKOD

3056. SKUNIVERSE AUTOMOBILE PVT LTD (--01), GATA NO.1738,V-KAKORE DEHAT, TEHSIL SIKANDRABAD,DIST.BULANDSHAHR, - 203203

KANNAUJ

3057. KTL PVT LTD (2801--05), PLOT NO. - 377, AKBARPUR, KANNAUJ - 209725
PH :7408409305.

KANPUR

3058. KTL PVT LTD (2801-28-01), 9/46, BENAJHABAR ROAD, HARSH NAGAR, KANPUR - 208002
PH :7408409341.
3059. MY CAR PVT LTD (2803-28-01), 84/54 C, JARIB CHOWKI ,G.T. ROAD, KANPUR - 208003
PH :9792970511.
3060. KTL PVT LTD (2801-28-02), SHVAATRA KRISHNA NAGAR, G T ROAD, KANPUR - 208007
PH :7408409253.
3061. MY CAR PVT LTD (2803-28-02), C-16, SITE-1, PANKI INDUSTRIAL AREA, KANPUR - 208022
PH :9792970086.
3062. S B CARS PVT LTD (2806-28-01), 77B , FAZALGANZ, KANPUR - 208012
3063. MY CAR PVT LTD (2803-28-05), 88, BLOCK-T, FACTORY AREA, FAZALGANJ, KANPUR - 208004
PH :9792970081.
3064. S B CARS PVT LTD (2806-28-05), 1/6-7 AMBEDKAR PURAM, AWAS VIKASH, KALYANPUR, KANPUR - 208017
PH :7408525252.
3065. KULDEEP MOTORS KANPUR LLP (--01), BUKHAND NO. 756, 756A, 757, BLOCK: W, YOJNA: 2, JUHI KALAN, BARRA BYE PASS, KANPUR. - 208017
PH :9076608701.
3066. KTL PVT LTD (2801--07), ARAZI NO. 1110, VILLAGE BAIRI, AKBARPUR, KACHHAR, INDIRA NAGAR, KANPUR, UTTAR PRADESH - 208026
PH :7408409379.
3067. KULDEEP MOTORS KANPUR LLP (-28-02), PROPERTY NO. C-4 SITE-II, PANKI INDUSTRIAL AREA, KANPUR. - 208020
3068. MY CAR PVT LTD (2803-28-06), PLOT NO.64A, PAHARPUR, NEAR INDIRA PETRO, HAMIRPUR ROAD, NAUBASTA, PIN-208021 - 209401

KANTH

3069. AKANKSHA AUTOMOBILES PVT LTD (--01), GOSIPURA, HARIDWAR ROAD KANTH, DISTRICT - MORADABAD, UP - 244501

KAPTANGANJ

3070. SMARTWHEELS PRIVATE LIMITED (--01), IN FRONT OF BHARAT PETROL PUMP, RAMKOLA ROAD, KAPTANGANJ, DISTT- KUSHINAGAR, PIN- 274301. - 274301

KARHAL

3071. KULDEEP MOTORS PVT LTD (--01), SAFAI KARHAL ROAD, KARHAL, - 205264

KARWI

3072. MY CAR PVT LTD (--01), ARAJI NO. 58, MAUJA - AMANPUR, TEHSIL - KARWI, DIST. -CHITRAKOOT, UTTAR PRADESH. - 210205

KASIA

3073. ARBIT AUTOMOBILES PVT LTD (--01), MAUJA BHAISAHA, HETIMPUR KASIA, KUSHINAGAR, UTTAR PRADESH - 274206
PH :8953412821.

KATRA

3074. SUMITRA DS MOTORS PVT LTD (--01), GRAM: SAALPUR NAVADIYAM, NH24, KATRA, TEHSIL - TILHAR, SHAHJAHANPUR - 242301
PH :9336408074.

KAUSHAMBI

3075. SARASWATI MOTORS LLP (--01), ARAZI NO 1228, KORRO MANJHANPUR, KAUSHAMBI, UTTAR PRADESH. PINCODE - 212207. - 212207
PH :8090854005.

KAYAMGANJ

3076. MY CAR PVT LTD (--01), BYE PASS ROAD , NEAR KHAN PETROL PUMP, VILLAGE : KAYAMGANJ , DISTT: FARUKHABAD - 209502

KHAIR

3077. DEV MOTORS PVT LTD (--01), PLOT 117, ALIGARH PALWAL ROAD, VILLAGE CHAMAN NAGARIYA, KHAIR - 202138
PH :7351345577.

KHURJA

3078. SKUNIVERSE AUTOMOBILE PVT LTD (--01), OLD GT ROAD, KHURJA, DISTRICT- BULANDSHAHAR, UTTAR PRADESH - 203131. - 203131
PH :7055118430.

KIRAOLI

3079. PREM MOTORS PVT LTD (--01), GOVIND PALACE, NEAR KIRAWALI TEHSIL, AGRA – JAIPUR HIGHWAY, KIRAWALI, DISTRICT – AGRA, UTTAR PRADESH. - 283122
PH :9690010799.

KITHORE

3080. RADHAGOVIND AUTOMOBILES PVT LTD (--01), MANSAB PURA, ISLAMABAD, OPP. HP PETROL PUMP, KITHORE, MEERUT, UTTAR PRADESH - 250104

KONCH

3081. KULDEEP MOTORS KANPUR LLP (--01), NEW PATEL NAGAR, CITY KONCH, DISTRICT - JALAUN, UTTAR PRADESH - 285205
PH :9839015046.

KOSI

3082. UMA MOTORS PVT LTD (--01), KHASRA NO. 245, CITY - KOSI, DIST.-MATHURA. - 281004

KUBERPUR

3083. KTL PVT LTD (6606--04), KHASRA NO.248,249,251, NAWALPUR, BHAGPUR, POST-ETHMADPUR, NH-2, KUBERPUR, AGRA, UTTAR PRADESH - 282006
PH :8449715099.

KUNDA

3084. SARASWATI MOTORS LLP (--01), ALLAHABAD-LUCKNOW HIGHWAY, KUNDA, DISTRICT PRATAPGARH. - 230204
PH :8090854005.

KURAWALI

3085. KULDEEP MOTORS PVT LTD (--01), GT ROAD,NEAR SWARAJ MEMORIAL PUBLIC SCHOOL, - 205265

KURSI

3086. BRIGHT 4 WHEEL SALES PVT LTD (--01), GATA NO. 261, VILLAGE BASARA,, PARGANA KURSI, TEHSIL FATEHPUR, - 225302

LAHARPUR

3087. CONCEPT CARS LIMITED (--01), KHASARA NO: 1639 VILLAGE LACHCHHAN NAGAR TEHSIL LAHARPUR DISTRICT SITAPUR UP - 261135

LAKHIMPUR

3088. SUMITRA DS MOTORS PVT LTD (--02), GATA NO. 66, LRP ROAD, TOWARDS GOLA, LAKHIMPUR KHERI - 242001
3089. SUMITRA DS MOTORS PVT LTD (--01), GATE NO 604, PALIA ROAD, NEAR FCI WEAR HOUSE, VILLAGE - BHARDSARIYA, KHERI, LAKHIMPUR - 262702

LALGANJ

3090. KTL AUTOMOBILE PRIVATE LIMITED (--01), JEEWAN DEEP COMPOUND, ALLAHABAD ROAD, LALGANJ, DISTT. RAIBARELLI - 229206

LALITPUR

3091. SURI AUTOMOBILES (6001--03), JAHANSI SAGAR ROAD, LALITPUR - 284001
PH :9451496015.
3092. VELOCITY CARS (A UNIT OF BASERA VELOCITY AUTOHUB PVT LTD) (--01), LALITPUR BYPASS ROAD, NH26 (LALITPUR-MEHRAUNI HIGHWAY), IN FRONT OF RMV COLLEGE ROAD, MAIN HIGHWAY, LALITPUR, UTTAR PRADESH - 284403
PH :9560998709.

LONI

3093. T R SAWHNEY MOTORS PVT LTD (--G1), PLOT NO. 16, DELHI SAHARANPUR ROAD, KHANNA NAGAR, LONI, GHAZIABAD, UTTAR PRADESH - 201102

LUCKNOW

3094. ANAND MOTOR AGENCIES LTD (1301-13-01), 11TH KMS, FAIZABAD ROAD, CHINHAT, LUCKNOW - 227105
PH :7080000462.
3095. KTL AUTOMOBILE PRIVATE LIMITED (1311-13-01), MATIYARI CHAURAHA, CHINNHAT, FAIZABAD ROAD, LUCKNOW - 227105
PH :7408411453.
3096. ANAND MOTOR AGENCIES LTD (1301-13-02), 47, NEHRU ROAD, SADAR BAZAR, LUCKNOW - 226016
3097. BRIGHT 4 WHEEL SALES PVT LTD (1305-13-01), 11/CP- 6, VIKAS NAGAR, RING ROAD, LUCKNOW - 226022
3098. ONE UP MOTORS INDIA PVT LTD (1306-13-01), C-16A,TRANSPORT NAGAR,KANPUR ROAD, LUCKNOW, KANPUR ROAD, LUCKNOW - 226012
3099. KTL AUTOMOBILE PRIVATE LIMITED (1311-13-02), INDRA NAGAR, OPP. HALFAIZABAD ROAD, LUCKNOW, UTTAR PRADESH - 226016
PH :7408411478.
3100. KTL AUTOMOBILE PRIVATE LIMITED (1311-13-03), BEHIND N S KOHLI PETROL PUMP, SARDARI KHEDA, KANPUR ROAD, ALAMBAGH, LUCKNOW - 226005
3101. ANAND MOTOR AGENCIES LTD (1301-13-04), G-3, LDA MARKET, ALIGANJ, LUCKNOW - 226024
3102. ONE UP MOTORS INDIA PVT LTD (1306-13-03), CHHANNILAL CROSSING, MANDIR MARG, LUCKNOW - 226005
PH :9918500451.
3103. BRIGHT 4 WHEEL SALES PVT LTD (1305-13-02), PARGANNA MOHANNA, STP ROAD, CHATMEEL, LUCKNOW - 226021
PH :9838075960.
3104. BRIGHT 4 WHEEL SALES PVT LTD (1305-13-05), PLOT NO. 68, BUTLER GANJ, BAALU ADDA, LUCKNOW. - 226001
3105. MEGA MOTORS (A UNIT OF AKM MOTORS PVT LTD) (--01), CP1 (COMMERCIAL PLOT 1), VIBHAV KHAND, GOMTI NAGAR, LUCKNOW. - 226010
3106. KTL AUTOMOBILE PRIVATE LIMITED (-13-07), B-6/1A, AMAUSI INDUSTRIAL AREA, NADARGANJ, LUCKNOW, UTTAR PRADESH. - 226008
PH :7800007376.
3107. BRIGHT 4 WHEEL SALES PVT LTD (1305-13-06), KHASRA NO. 418, MISHRAPUR PARGANA MAHONA, KURSI ROAD, LUCKNOW. - 226022
PH :9935275786.
3108. ONE UP MOTORS INDIA PVT LTD (1314-13-01), KHASRA NO. 20 TO 25, 30, 35, 37, 42, 43, 45, 47, 48, 49, 67, 68, 71 & 99, RAJJABGANJ, HARDOI ROAD, LUCKNOW. - 226003
3109. MEGA MOTORS (A UNIT OF AKM MOTORS PVT LTD) (1313--02), KHASRA NO. 614, VILLAGE: BHADRUKH, VIP CANNEL RINGI ROAD, DEVI KHERA, TELIBAGH (VIP ROAD), TEHSIL: SAROJNI NAGAR,
LUCKNOW, U□AR PRADESH 226002 - 226002
PH :6388901514.
3110. KULDEEP MOTORS LUCKNOW PVT LTD (1315-13-01), PLOT NO F-01, SECTOR-B, PRIYADARSHINI, LUCKNOW, UTTAR PRADESH - 226006
3111. MEGA MOTORS (A UNIT OF AKM MOTORS PVT LTD) (1313-13-03), KHASRA NO 326, IIM ROAD, MUKATIPUR, LUCKNOW, UTTAR PRADESH - 226013
3112. MEGA MOTORS (A UNIT OF AKM MOTORS PVT LTD) (1313--04), 671,BADRUK VIP ROAD, TELIBAGH, LUCKNOW, UTTAR PRADESH - 226010
3113. BRIGHT 4 WHEEL SALES PVT LTD (1305-13-09), CP-195, SITUATE AT VIRAJ KHAND, GOMTI NAGAR, LUCKNOW, PIN-226010 - 226010

MADHOGANJ

3114. CONCEPT CARS LIMITED (--01), KANPUR ROAD, NEAR RAILWAY CROSSING, MADHOGANJ DIST. HARDOI. - 241302

MADHOGARH

3115. S B CARS PVT. LTD. (--01), MADHOGARH ORAI, JALAUN HIGHWAY, - 285126

MAHARAJGANJ

3116. SMARTWHEELS PRIVATE LIMITED (--01), BESIDES SHUBHAM HERO, RAMPUR, MAHARAJGANJ, UTTAR PRADESH.
NEAR PHARENDA TAXI STAND, NAHAR ROAD, PIPAR DEORA, MAHARAJGANJ, DIST. MAHARAJGANJ, UTTAR PRADESH. - 273303
3117. KTL AUTOMOBILE PRIVATE LIMITED (--01), MUNNA MARKET HAIDERGARH ROAD TOWN AREA, TEHSIL – MAHARAJGANG, DISTRICT – RAIBAREILLY, UTTAR PRADESH.
PH :99184512222.

MAHIRPURWA

3118. ONE UP MOTORS INDIA PVT LTD (--01), NEAR KURWA RAILWAY CROSSING, , LAKHIMPUR BAHRAICH ROAD, UTTAR PRADESH - 271855

MAHMUDABAD

3119. CONCEPT CARS LIMITED (--01), OPPOSITE INDIAN PETROL PUMP, MAHMUDABAD SIDAHULI ROAD, MAHMUDABAD, DISTRICT SITAPUR, UTTAR PRADESH. - 261203

MAHOBA

3120. SURI AUTOMOBILES (6001--02), NEAR PARMANAND CHOWK, GANDHINAGAR, MAHOBA, UTTAR PRADESH, - 284001
3121. VELOCITY CARS (A UNIT OF BASERA VELOCITY AUTOHUB PVT LTD) (--01), BAJRANG CHOWK, SAGAR-KANPUR HIGHWAY, MAHOBA - 210427
PH :9560998709.

MAHOLI

3122. CONCEPT CARS LIMITED (--01), MUSKAN TRACTORS, NEAR MELA MAIDAN, SHAHJHANPUR ROAD, MAHSUNIYAGANJ, MAHOLI, DIST.-SITAPUR, UTTAR PRADESH. - 261141
PH :7607696666.

MAINPURI

3123. KULDEEP MOTORS PVT LTD (--02), SKP-4A, MAINPURI - 205001
PH :9235258444.

MALIHABAD

3124. ONE UP MOTORS INDIA PVT LTD (--01), KHASRA NO. 326/1 AND 327, VILLAGE PARGANA, TEHSIL – MALIHABAD, DISTRICT – LUCKNOW, UTTAR PRADESH. - 227111
PH :9918100781.

MANDI DHANORA

3125. AKANKSHA AUTOMOBILES PVT LTD (--01), CHANDPUR ROAD,NEAR NEEDARMAL SUGARCIMCRASHER,DHANORA - 244131

MATHURA

3126. UMA MOTORS PVT LTD (--01), 68, MAHOLI,NEAR JAI GURUDEV TEMPLE, NH-2, KM STONE 146, MATHURA - 281004

MATI

3127. MEGA MOTORS (A UNIT OF AKM MOTORS PVT LTD) (--01), GATA NO 761, NEAR MATI POLICE CHOWKI, VILLAGE- MATI, PARGANA- DEWA, TEHSIL- NAWABGANJ, BARABANKI, UTTAR PRADESH - 225003
PH :6388901514.

MAU

3128. DEEP MOTORS (--01), DARI CHATTI , KHUKHUNDVA, MAU, UTTAR PRADESH. - 275305
PH :7704000552.

MAUDAHA

3129. KTL PVT LTD (--01), MAUDAHA, DISTRICT - HAMIRPUR, UTTAR PRADESH - 210507

MAURANIPUR

3130. VELOCITY CARS (A UNIT OF BASERA VELOCITY AUTOHUB PVT LTD) (--01), BASERA CITY, MAURANIPUR - GARUTHA ROAD, MAURANIPUR, DISTT: JHANSI, UTTAR PRADESH - 284204
PH :8299202863.

MAWANA

3131. RADHAGOVIND AUTOMOBILES PVT LTD (--01), MAIN SHANTI NAGAR ROAD, MAWANA KALAN, SUBDIVISION HASTINAPUR, TEHSIL MAWANA, DISTRICT MEERUT - 250401
PH :7456001002.

MEERGANJ

3132. KAVISHA MOTORS PVT LTD (--01), SINDHAULI CHAURAHA, ADJACENT TO OBC BANK, NH-24, MEERGANJ, TEHSIL & DISTT - BAREILLY, UTTAR PRADESH - 243504

MEERUT

3133. TANYA AUTOMOBILES PVT LTD (4802-48-01), GOVT. INDUSTRIAL TRAINING INSTITUTE, BACHHA PARK, MEERUT - 250001
PH :9837077003.

3134. TANYA AUTOMOBILES PVT LTD (4802-48-03), 90, NAUCHANDI GROUND,GARH ROAD, MEERUT - 250001
PH :9837077004.

3135. RADHAGOVIND AUTOMOBILES PVT LTD (4807--01), VILLAGE – BARAL, KUNDA GATE NEAR YOGI FARM HOUSE, PARTAPUR, DELHI ROAD, MEERUT. - 250002

3136. TANYA AUTOMOBILES PVT LTD (4802-48-04), MUNICIPAL NO. 9, 9/2, 9/3, 9/4, 11, 11/1, VILLAGE - ROSHANPUR DORLI, OPP. KONARK COLONY, NEAR RAJMANDIR MANDAP, ROORKEE ROAD, TEHSIL - SARDHANA, MEERUT, U.P. - 250001
PH :7900201515.

3137. T R SAWHNEY MOTORS PVT LTD (4808-48-01), MUNICIPAL NO 101, KHASRA NO 1926/ MINJUMLA & 1927/1, MAHAL LEKHRAJ MUJBITA, MAIN DELHI ROAD, MEERUT, UP - 250002 - 250002
PH :9999163125.

MEHRONI

3138. VELOCITY CARS (--01), INDIRA CHAURAHA,, MEHRONI MADWARA ROAD, - 284405

MEJA

3139. SARASWATI MOTORS LLP (--01), MEJA ROAD, MEJA KHAS, PRAYAGRAJ, - 212302

MIRZAPUR

3140. STAR CARS (A UNIT OF SARASWATI VEHICLES LLP) (--01), PILI KOTHI, STATION ROAD, MIRZAPUR, UTTAR PRADESH - 231001

MISHRIKH

3141. CONCEPT CARS LIMITED (--01), NEAR ARYAVART BANK, SITAPUR ROAD, MISHRIKH, SITAPUR, U.P, PINCODE: 261401 - 261401
PH :7607696666.

MODINAGAR

3142. MOTORCRAFT SALES PVT LTD (5903--02), OPPOSITE SONIA ENCLAVE, ADJACENT SUMAN CINEMA, NH-58, MODINAGAR - 201204

MOHANLAL GANJ

3143. BRIGHT 4 WHEEL SALES PVT LTD (--01), KHASARA PLOT NO.581, VILLAGE PURSANI, PARGANA AND TEHSIL MOHANLALGANJ, LUCKNOW DISTT., UTTAR PRADESH - 227305

MOOSANAGAR

3144. MY CAR PVT LTD (--01), VILL GAUSGANJ, POST MOOSANAGAR, KANPUR DEHAT, UTTAR PRADESH. - 209208

MORADABAD

3145. AKANKSHA AUTOMOBILES PVT LTD (--01), DELHI ROAD, 5TH.KM, MORADABAD (U.P.) - 244001
PH :7247800008.

3146. AKANKSHA AUTOMOBILES PVT LTD (--03), LAKRI FAZALPUR MINI BYPASS, MORADABAD. 5TH KM DELHI ROAD, MORADABAD - 244001
PH :9568200001.

3147. AKANKSHA AUTOMOBILES PVT LTD (--04), KHASRA NO. 569-570, VILLAGE – KAJIPURA, KANT ROAD, MORADABAD, UTTAR PRADESH. - 244001
PH :7895600007.

MUGHALSARAI

3148. AGR AUTOMOBILES PVT. LTD. (--01), ARAJI NO.23,MAUJA CHANDASHI,, PARGANA RALHUPUR,DDU NAGAR,MUGHALSARAI, - 232101

MURADNAGAR

3149. MOTORCRAFT SALES PVT LTD (--01), KHASRA NO. 317, ASHLAT NAGAR, BESIDE HOTEL SR GRAND, MURADNAGAR, PIN-201206, UTTAR PRADESH - 201206

MURATGANJ

3150. SARASWATI MOTORS LLP (--01), A-ONE MARKET, IN FRONT OF MELA GROUND, MURATGANJ, KAUSHAMBHI, 212201 - 212201

MUZZAFARNAGAR

3151. RADHAGOVIND AUTOMOBILES PVT LTD (--01), NH -58 ,121 KM STONE, BY-PASS ROAD, NEAR TRANSPORT NAGAR, MUZAFFARNAGAR - 251001

NAGINA

3152. SHAKUMBARI AUTOMOBILES PVT LTD (--01), RAIPUR ROAD, NEAR AKBARABAD CHOWK, , NAGINA, DIST. BIJNOR, UTTAR PRADESH - 246762

NAJIBABAD

3153. SHAKUMBARI AUTOMOBILES PVT LTD (--01), NEAR BUS STAND, BIJNORE BYPASS ROAD, NAJIBABAD, DIST.-BIJNORE, UTTAR PRADESH. - 246701
PH :8630881459.

NANPARA

3154. KTL AUTOMOBILE PRIVATE LIMITED (--01), GATA NO. 3730, NANPARA DEHAT, PARGANA TE, TEHSIL, NANPARA, DIST. BAHRAICH - 271865

NARWAL

3155. MY CAR PVT LTD (--01), GATA NO. 821 , KARIBGWANA ROAD , NARWAL , KANPUR, UTTAR PRADESH. - 209401
PH :9792970005.

NAUGARH

3156. SMARTWHEELS PRIVATE LIMITED (--01), NEAR PAKARI CHAURAHA, NAUGARH ROAD, SIDDHARTHNAGAR - 272205
PH :7705803129.

NAUTANWA

3157. SMARTWHEELS PRIVATE LIMITED (--01), OPP. RAJIV GANDHI DEGREE COLLEGE, BYPASS ROAD, NAUTANWA, DISTT – MAHARAJGANJ - 273164

NAWABGANJ

3158. KAVISHA MOTORS PVT LTD (--01), VILLAGE – EIDH JAGIR NEAR GURUDWARA AT NH-74, TEHSIL – NAWABGANJ, DISTRICT – BAREILLY.

3159. S B CARS PVT LTD (--01), NAWABGANJ (UNNAO), UTTAR PRADESH. - 209859

NIGOHA

3160. BRIGHT 4 WHEEL SALES PVT LTD (--01), GATA NO 146, VILL NIGOHA, TEHSIL MOHANLALGANJ, LUCKNOW - 226302
PH :7011482503.

NOIDA

3161. ROHAN MOTORS LTD (--01), C-8/9, SECTOR - I, NOIDA - 201301

3162. ROHAN MOTORS LTD (--02), C-11, SECTOR-1, NOIDA, UTTAR PRADESH - 201301

3163. FAIR DEAL PREMIUM WHEELS PVT LTD (--01), D-39, SEC-10, NOIDA - 201301

3164. VIPUL MOTORS PVT LTD (--02), A-111, SECTOR 5, NOIDA - 201301

3165. VIPUL MOTORS PVT LTD (--01), J-14, SECTOR-63, NOIDA, DISTT. GAUTAM BUDDH NAGAR (U.P.) - 201301

3166. MOTORCRAFT SALES PVT LTD (5903--04), PLOT NO.15, SECTOR-140, NOIDA (U.P.) - 201305

3167. MOTORCRAFT SALES PVT LTD (5903--05), PLOT NO 19 ECOTECH 12 GREATER NOIDA WEST ,GB NAGAR , UP - 201306
PH :8826312222.

3168. DEV MOTORS PVT LTD (--01), GATA NO -582, VILLAGE SALARPUR, SECTOR-49, VISHWAKARMA ROAD, NOIDA, UTTAR PRADESH - 201304

3169. COMPETENT AUTOMOBILES CO LTD (--01), KHASRA NO. C-12, SECTOR-85, NOIDA - 201301

ORAI

3170. S B CARS PVT LTD (2806--02), KANPUR ROAD, ORAI - 285001
PH :9307219303.

3171. KTL PVT LTD (--01), KHASRA NO.155, MAUJA LAHARIYAPURWA, JALAUN, ORAI, PIN-285001, UTTAR PRADESH - 285001

PADRONA

3172. SMARTWHEELS PRIVATE LIMITED (--01), AARJI NO. 37 & 38, MAUJA - BELWA MISRA, TAPPA PAKDI, PARAGNA - SIDHUWA JAUBNA, TEHSIL - PADRAUNA, DIST.-KUSHINAGAR, UTTAR PRADESH. - 274304
PH :7705803259.

PANWARI

3173. SURI AUTOMOBILES (--01), PANWARI, NEAR RAM LEELA GROUND, TEHSIL KULPAHAR, DISTRICT MAHOBA. - 210429
PH :9452287690.

PAPHUNDA

3174. TANYA AUTOMOBILES PVT LTD (4802--05), 354/1, MAIN HAPUR ROAD, PHAPHUNDA. - 245206
PH :9917547777.

PATIYALI

3175. KTL PVT LTD (--01), PATIYALI, KASGANJ, UTTAR PRADESH. - 207243

PATTI-UP

3176. BRIGHT 4 WHEEL SALES PRAYAGRAJ PRIVATE LIMITED (--01), KHASRA NO.65,WARD NO.7, , KUMHIYA,BYPASS ROAD, PATTI, UTTAR PRADESH - 230135

PAYAGPUR

3177. KTL AUTOMOBILE PRIVATE LIMITED (--01), ACHAL COMPLEX, NEAR BANK OF BARODA, PAYAGPUR - 271871

PEPPEGANJ

3178. ARBIT AUTOMOBILES PVT LTD (--01), GHATA NO. 466, 465 & 472, PEPPEGANJ, MOUZA - SAHABGANJ, TEHSIL - CAMPIERGANJ, DISTT: GORAKHPUR - 273165

PILIBHIT

3179. CORAL MOTORS (P) LTD (--01), BISALPUR ROAD, PILIBHIT, U.P. - 262001
PH :9837891846.

3180. KAVISHA MOTORS PVT LTD (--01), OPP. ANKUR INDUSTRIES, PILIBHIT PURANPUR 1.5 KMS FROM ASSAM ROAD CHAURAHA, - 262001

POOTH KHAS

3181. T R SAWHNEY MOTORS PVT LTD (--01), POOTH KHAS, ROHTA ROAD, MEERUT, UTTAR PRADESH. - 250502
PH :9999790229.

PRATAPGARH

3182. BRIGHT 4 WHEEL SALES PRAYAGRAJ PRIVATE LIMITED (--01), KHASRA NO 1390, VILL: GONDEY, CHILBILA, PRATAPGARH, DIST. PRATAPGARH - 230001

3183. AMITDEEP MOTORS PVT LTD (--01), CHILBILA PATTI ROAD, NEAR TALA MODE, PIPARI, KHALSA, PRATAPGARH - 230001

PURANPUR

3184. CORAL MOTORS (P) LTD (--01), KHASRA NO. 768 & 770, VILLAGE – KHAMRIYA PATTI, PURANPUR – PILIBHIT ROAD, TEHSIL AND PARGANA – PURANPUR, DIST. PILIBHIT. - 262124

PURWA

3185. KULDEEP MOTORS KANPUR LLP (--01), GAURAWA PURWA ROAD DURGAPUR, PURWA, DISTRICT - UNNAO, UTTAR PRADESH - 209825

RAIBAREILLY

3186. KTL AUTOMOBILE PRIVATE LIMITED (--01), PLOT NO. 1550, GULLUPUR, P O KATWARA, HIJARCHANDRAPUR, RAIBAREILLY - 229303
PH :7800001601.

RAM SANEHI GHAT

3187. BRIGHT 4 WHEEL SALES PVT LTD (--01), GATA NO 76, VILLAGE - BHENDUWA BRAHMANAN, TEHSIL - RAM SANEHI GHAT, BARABANKI, UTTAR PRADESH, PIN 225409 - 225409
PH :9935275786.

RAMNAGAR

3188. BRIGHT 4 WHEEL SALES PVT LTD (--01), KHASRA NO. 629, VILLAGE - BUDHAWAL, TEHSIL - RAMNAGAR, DIST.-BARABANKI, UTTAR PRADESH. - 225205

RAMPUR (UP)

3189. AKANKSHA AUTOMOBILES PVT LTD (--02), SHAHZAD NAGAR BAREILLY ROAD RAMPUR UTTAR PRADESH - 244901
PH :7895500007.

RATH

3190. MY CAR PVT LTD (--01), ETAYAL ORAI ROAD,, RATH,HAMIRPUR, - 210431

RAYA

3191. UMA MOTORS PVT LTD (--01), CHAUDHARY PADAM SINGH MARKET, NEAR INDIA INTER COLLEGE, RAYA - MAANT ROAD, RAYA, DISTT. MATHURA (U.P.) - 281204

RISIA BAZAR

3192. ONE UP MOTORS INDIA PVT LTD (--01), NANAPARA ROAD NEAR HP PETROL PUMP RISIA BAZAAR BAHRAICH PIN:- 271875 - 271875

ROBERTSGANJ

3193. STAR CARS (A UNIT OF SARASWATI VEHICLES LLP) (--01), UMRAURA, PIMPRI ROAD, ROBERTSGANJ, UTTAR PRADESH. - 231216

RUNKATA

3194. PREM MOTORS PVT LTD (--01), ROYAL BANDHAN RESORT, KHASRA NO 108, NH-2, RUNKATA, AGRA. - 282101
PH :7060111245.

RUPAIDIHA

3195. ANAND MOTOR AGENCIES LTD (--01), RAMLEELA CHAURAHA, RUPAIDIHA, UTTAR PRADESH - 271881

SADABAD

3196. DEV MOTORS PVT LTD (--01), VILLAGE KUTKAI, AGRA ROAD SADABAD, DISTRICT HATHRAS, UTTAR PRADESH - 281306

SAHARANPUR

3197. ATELIER AUTOMOBILES (--01), NEAR BARI NAHAR, AMBALA ROAD, SAHARANPUR - 247001
PH :7500250070.

3198. TANYA AUTOMOBILES PVT LTD (--01), AAWAS VIKAS YOJNA, DELHI ROAD, SAHARANPUR, UTTAR PRADESH - 247001
PH :9837077004.

SAHASWAN

3199. CORAL MOTORS (P) LTD (--01), OPP BHARAT PETROL PUMP, BADAUN ROAD, SAHASWAN, DISTT. BADAUN. - 243638
PH :9837891846.

SAHIBABAD

3200. FAIR DEAL WHEELS PVT LTD (--01), 12/67 SITE 4, INDUSTRIAL AREA,,SAHIBABAD, GHAZIABAD - 110095

3201. MOTORCRAFT SALES PVT LTD (5903--01), S-7 SITE-IV, SAHIBABAD INDUSTRIAL AREA, NEAR DABUR CHOWK, SAHIBABAD - 201010

3202. T R SAWHNEY MOTORS PVT LTD (--03), 28/1/1, SITE-IV, SAHIBABAD INDUSTRIAL AREA,DISTT-GHAZIHABAD, UTTAR PRADESH - 201010

SALEMPUR

3203. SMARTWHEELS PRIVATE LIMITED (--01), GHATA NO. 48, GRAM: DEVPAR, TEHSILL: SALEMPUR, PARGANA: SALEMPUR MAUJHAULI, DISTT: DEORIA - 274509

SALON

3204. KTL AUTOMOBILE PRIVATE LIMITED (--01), SALON BYPASS, PARSHEDAPUR ROAD, SALON, DISTRICT RAIBARELLI, UTTAR PRADESH - 229127
PH :9918451222.

SAMBHAL

3205. AKANKSHA AUTOMOBILES PVT LTD (--01), PLOT NO. 303, NEAR TAJ MILK FACTORY, MORADABAD SAMBHAL ROAD, SAMBHAL, UTTAR PRADESH - 244302
PH :7248000028.

SANDILA

3206. CONCEPT CARS LIMITED (--01), PLOT NO.371, SARAY MARUFPUR, LUCKNOW ROAD, SANDILA-241204 DISTT. HARDOI. - 241204

SARDHANA

3207. RADHAGOVIND AUTOMOBILES PVT LTD (--01), DAURALA ROAD, NEAR RADHASWAMI SATSANG, SARDANA - 250342
PH :7456001030.

SHAHABAD

3208. CONCEPT CARS LIMITED (--01), VILLAGE MUJAGADH, SHAHABAD - 241124

SHAHJAHANPUR

3209. SUMITRA DS MOTORS PVT LTD (--01), SITAPUR ROAD, NH-24, SHAHJAHANPUR - 242001

SHAMLI

3210. RADHAGOVIND AUTOMOBILES PVT LTD (--01), KHERI KARMU, OPPOSITE POWER HOUSE, PANIPAT-KAIRANA ROAD, SHAMLI UTTAR PRADESH - 247776

SHAMSHABAD

3211. KTL PVT LTD (--01), BAKALPUR, TEHSIL SHAMSABAD, AGRA SHAMSHABAD ROAD , UTTAR PRADESH. - 283125

SHIVRAJPUR

3212. KTL PVT LTD (--01), ARAZI NO. 67K, DUBIYANA, GT ROAD, SHIVRAJPUR, KANPUR, UTTAR PRADESH - 209205
PH :9414113666.

SIDHAULI

3213. CONCEPT CARS LIMITED (--01), R/O MISHRIKH ROAD NOROTTAM NAGAR, DAKSHIDI, OPP. BLOCK, SIDHAULI, SITAPUR. - 261303
PH :7607596666.

SIDHOUR

3214. BRIGHT 4 WHEEL SALES PVT LTD (--01), KHASRA NO.1632, VILLAGE SIDHAUR KHAS, TEHSIL HAIDERGARH, DISTRICT BARABANKI - 225413

SIKANDRA

3215. KTL PVT LTD (--01), YADAV MARKET, NEAR SURYA DHABA, NH-19, ETAWAH-KANPURROAD, SIKANDRA, U.P. - 209715
PH :9414113666.

SIKANDRABAD

3216. SKUNIVERSE AUTOMOBILE PVT LTD (--01), NEAR R K SCHOOL, VILLAGE – SANWALI SIKANDRABAD , DIST - BULANDSHAHR UTTAR PRADESH , PIN 203202
PH :7310106565.

SIRATHU

3217. BRIGHT 4 WHEEL SALES PRAYAGRAJ PRIVATE LIMITED (--01), KHASRA NO 584, SAYARA MEETHEPUR, SIRATHU, DISTRICT ¿ KAUSHAMBI, UTTAR PRADESH. - 212217

SIRAULI GHAUSPUR

3218. BRIGHT 4 WHEEL SALES PVT LTD (--01), KHASRA 77, GRAM GHUSEDIYA, POST & TEHSIL SIRAULI GAUSPUR, BARABANKI UTTAR PRADESH- 225207 - 225207
PH :7011482503.

SISWA BAZAR

3219. ARBIT AUTOMOBILES PVT LTD (--01), WARD NO. 4 , SAMRAT NAGAR SISWA BAZAR MAHARAJGANJ - 273162

SITAPUR

3220. CONCEPT CARS LIMITED (--02), LUCKNOW-DELHI ROAD, NH-24, VILLAGE JAMMAYAPUR, SITAPUR - 261001

SIYANA

3221. SKUNIVERSE AUTOMOBILE PVT LTD (--01), BULANDSHAHR ROAD, SIYANA DIST-BULANDSHAHR, UTTAR PRADESH PIN CODE 203412

SULTANPUR

3222. KIRTI KUNJ AUTOMOBILES PVT LTD (--01), SHAURYAMAU, MIRANPUR, VARANSI-LUCKNOW HIGHWAY, NH-56 (FAIZABAD BYPASS) SULTANPUR - 228001

SWAR

3223. AKANKSHA AUTOMOBILES PVT LTD (--01), IN FRONT OF EIDGAH, TEHSIL – SWAR, DISTRICT – RAMPUR, UTTAR PRADESH. - 244924
PH :7900600041.

TAMBOUR

3224. CONCEPT CARS LIMITED (--01), NEAR INDIAN GAS GANJAR, SITAPUR ROAD TAMBOUR - 261208
PH :7607696666.

THAKURDWARA

3225. AKANKSHA AUTOMOBILES PVT LTD (--01), KASHIPUR ROAD, THAKURDWARA, UTTAR PRADESH
2 KM. MORADABAD ROAD, NEAR JEETA KA DHABA, SAHAB GANJ (MUNSHI GANJ), THAKURDWARA, DISTT. MBD. UTTAR PRADESH - 244601
PH :7248000040.

TIKAITGANJ

3226. KTL AUTOMOBILE PRIVATE LIMITED (--01), KANAUJIA CITY, PHASE 2, MADARPUR, MOHAN ROAD, LUCKNOW. - 226013
PH :9918451222.

TILOI

3227. KTL AUTOMOBILE PRIVATE LIMITED (--01), VILLAGE PURE LANGDA, PAKAR GAON, MOHAN GUNJ, TEHSIL - TILOHI, DIST.-RAIBARELI. - 229309
PH :99184512222.

UNCHAHAR

3228. KTL AUTOMOBILE PRIVATE LIMITED (--01), ALLAHABAD LUCKNOW ROAD, NEAR PURANA PETROL PUMP, WARD NO. 5, UNCHAHAR, DISTT: RAIBARELI - 229404
PH :99184512222.

UNNAO

3229. S B CARS PVT LTD (2806--04), HUSSAIN NAGAR BYPASS,KANPUR-LUCKNOW HIGHWAY ROAD, UNNAO,U.P. - 209801
PH :9839806451.

UTRAULA

3230. KTL AUTOMOBILE PRIVATE LIMITED (--01), SH-9 , BESIDES SR PLOTTING OFFICE MANKAP, JOGIVEER - 271604

VARANASI

3231. VARANASI MOTORS PVT LTD (8402-84-01), THE MALL, CANTONMENT, VARANASI - 221001
3232. AGR AUTOMOBILES PVT LTD (8403-84-01), B-38/2A, MAHMOORGANJ, GOPAL VIHAR, VARANASI - 221010
3233. VARANASI MOTORS PVT LTD (8402-84-03), AARAJI NO.2 AND 48, G.T. ROAD, TODAPUR, MOHANSARAI, RAJATALAB, VARANASI (U.P.) - 221311
3234. AGR AUTOMOBILES PVT LTD (8403-84-04), ARAZI NO. 399, 398, 400, 401,NH2 PANDITPUR, DEHAT AMANAT, TEHSIL - RAJATALAB, VARANASI - 221112

VRINDAVAN YOJNA, LUCKNOW

3235. KTL AUTOMOBILE PVT. LTD (1311-13-08), PLOT NO 6&7 SARAWATIPURAM, NEAR SGPGI, RAI BARELI ROAD LUCKNOW - 226029

UTTARAKHAND

ALMORA

3236. NAINITAL MOTORS PVT LTD (--04), PAWAR BHAWAN, JOSHI KHOLA RAJPURA, PITHRAGARH ROAD, ALMORA - 263601
PH :9997194132.

BAGESHWAR

3237. NAINITAL MOTORS PVT LTD (--05), VILL. BILOMA,SERA, BAGESHWAR, UT, BAGESHWAR - 263642
PH :9557200522.

BARKOT

3238. FUTURE AUTO WHEELS PVT LTD (--01), YAMNOTRI ROAD, BARKOT, DISTRICT UTTARKASHI, UTTARAKHAND - PINCODE - 249141 - 249141

BAZPUR

3239. AKANKSHA AUTOMOBILES (RUDRAPUR) PVT LTD (--01), KHASRA NO. 96/2, VILLAGE – BHONA, ISLAM NAGAR, TEHSIL – BAZPUR, UTTARAKHAND. - 262401

CHAMPAWAT

3240. AKANKSHA AUTOMOBILES (RUDRAPUR) PVT LTD (--01), TANAKPUR LOHAGHAT ROAD, CHAMPAWAT, UTTARAKHAND - 262523

CHANDRAPURI

3241. SHAKUMBARI AUTOMOBILES PVT LTD (--01), KEDARNATH ROAD, BANASBARA, CHANDRAPURI, DISTRICT RUDRAPRAYAG, UTTARAKHAND - 246425

CHAUKHUTIYA

3242. NAINITAL MOTORS PVT LTD (--01), NH-58, BADRINATH ROAD, CHAUKHUTIYA, DIST. -ALMORA, UTTARAKHAND - 263656
PH :9997026565.

CHINIYALISOUR

3243. ROHAN MOTORS LTD (--01), VILL- NAGNI DHANPUR (CHINYALISAUR), WARD NO-6,NAGAR PALIKA PARISHAD,DISTT- U - 249196

DEHRADUN

3244. ROHAN MOTORS LTD (5702-57-01), 130/1 CHAKRATA ROAD, YAMUNA COLONY, DEHRADUN - 248001
3245. DD MOTORS (A DIVISION OF D.D. MOTORS MOBILITY) (5709-57-01), 918/221, PATEL NAGAR, INDUSTRIAL AREA, DEHRADUN
3246. ROHAN MOTORS LTD (5702-57-02), 257/2, GMS ROAD,,VILL. NIRANJANPUR, ADJ TO KAMLA PALACE, DEHRADUN - 248001
3247. FUTURE AUTO WHEELS PVT LTD (5706-57-01), KHASRA NO. 8KHA, MOHABEWALA INDUSTRIAL AREA, DEHRADUN, - 248001
3248. FUTURE AUTO WHEELS PVT LTD (5706-57-02), MUNICIPAL NUMBER 45 AND 46, RAJPUR ROAD, DEHRADUN, PIN: 248001 - 248001
PH :9760444430.
3249. SHAKUMBARI AUTOMOBILES PVT LTD (5708-57-01), KHASRA NO.15-ANA, MOHABBEWALA, SAHARANPUR ROAD, DEHRADUN, PIN-248001, UTTARAKHAND - 248001

DIDIHAT

3250. NAINITAL MOTORS PVT LTD (--01), SUBHASH CHANDRA BOSE WARD, NEAR D.I.E.T, DIDIHAT, DISTT PITHORAGARH, PINCODE: 262551. - 262551
PH :9634092692.

DOIWALA

3251. FUTURE AUTO WHEELS PVT LTD (--01), 26, MISSARAWALA, DOIWALA, DISTRICT – DEHRADUN, UTTARAKHAND. - 248140
PH :7883473506.

GADARPUR

3252. AKANKSHA AUTOMOBILES (RUDRAPUR) PVT LTD (--01), BHASIYA MOD, RUDRAPUR ROAD, GADARPUR, UDHAM SINGH NAGAR, UTTARAKHAND. - 263152

GAIRSAIN

3253. ROHAN MOTORS LTD (--01), KHASRA NO. 1048, RANIKHET ROAD, OPP. GIC GROUND, GAIRSAIN, DISTRICT – CHAMOLI, UTTARA KHAND. - 246428
PH :8126484626.

GANGOLIHAT

3254. NAINITAL MOTORS PVT LTD (--01), VILL- KHETIGARA, PITHORAGARH-GANGOLIHAT ROAD, GANGOLIHAT, DISTT: PITHORAGARH - 262522
PH :9997093043.

GOPESHWAR

3255. ROHAN MOTORS LTD (5702--03), CHOPTA MANDAL ROAD, NEAR FOREST GATE, GOPESHWAR - 131028
PH :9634852898.

HALDWANI

3256. NAINITAL MOTORS PVT LTD (--01), VILLAGE JEETPUR NEGY, 5TH KM RAMPUR ROAD, HALDWANI - 263139
PH :7060201024.
3257. NAINITAL MOTORS PVT LTD (--02), KALA DUNGI, NEAR ABDULLAH PETROL PUMP, HALDWANI - 263139
PH :8126359222.

HARIDWAR

3258. SHAKUMBARI AUTOMOBILES PVT LTD (--01), E-5/6, INDUSTRIAL AREA, HARDWAR - 249407

JASPUR

3259. AKANKSHA AUTOMOBILES (RUDRAPUR) PVT LTD (--01), GANGUWALA, INFRONT OF ROOPAM CONVENT, KASHIPUR ROAD, JASPUR, UTTARAKHAND. - 244712
PH :8192000724.

KARANPRAYAG

3260. ROHAN MOTORS LTD (--01), BADRINATH ROAD, KARANPRAYAG, DISTRICT – CHAMOLI, UTTARAKHAND. - 246444
PH :8126129148.

KASHIPUR

3261. AKANKSHA AUTOMOBILES (RUDRAPUR) PVT LTD (--01), BAZPUR ROAD, KASHIPUR - 244713

KHATIMA

3262. AKANKSHA AUTOMOBILES (RUDRAPUR) PVT LTD (--01), VILLAGE: CHARUBETA,NEAR RTO CHECK POST,PILIBHIT ROAD KHATIMA, U.S NAGAR,UTTRAKHAND - 262308

KOTDWAR

3263. SHAKUMBARI AUTOMOBILES PVT LTD (--02), PLOT NO.23 & 30 INDUSTRIAL ESTATE, SITABPUR, KOTDWAR, DIS. PAURI (GARHWAL), UTTRAKHAND - 249001

LAKSAR

3264. SHAKUMBARI AUTOMOBILES PVT LTD (--01), HARIDWAR ROAD, LAKSAR - 247664
PH :9927877715.

NANAKMATA

3265. AKANKSHA AUTOMOBILES (RUDRAPUR) PVT LTD (--01), KHATIMA ROAD, OPP GURURAMDAS HOSPITAL, NANAKMATTA, U.S. NAGAR, UTTARAKHAND. - 262311
PH :9012172084.

NARENDAR NAGAR

3266. SHAKUMBARI AUTOMOBILES PVT LTD (--01), MAIN MARKET, NARENDAR NAGAR, DISTRICT - TEHRI GARHWAL, UTTARAKHAND - PIN CODE - 249175 - 249175

NOORPUR

3267. SHAKUMBARI AUTOMOBILES PVT LTD (--01), MORADABAD ROAD, NOORPUR, TEHSIL CHANDPUR, DISTRICT BIJNOR, UP - PIN CODE - 246734 - 246734

PATI

3268. AKANKSHA AUTOMOBILES (RUDRAPUR) PVT LTD (--01), LOHAGHAT- HALDWANI MAIN ROAD, NEAR PITHORAGARH CO-OPERATIVE BANK, PATI-262528 - 262528
PH :9917467820.

PAURI

3269. SHAKUMBARI AUTOMOBILES PVT LTD (--01), PAURI KOTDWAR ROAD NEAR GMO PETROL PUMP PAURI GARHWAL UTTARAKHAND - 246001

PIPLAKOTHI

3270. SHAKUMBARI AUTOMOBILES PVT LTD (--01), BADRINATH ROAD,MAYAPUR, BATULA,PIPALKOTI, - 246472

PITHORAGARH

3271. NAINITAL MOTORS PVT LTD (--03), VILLAGE PANDA, ODSAINI, DHARCHULA ROAD, PITHORAGARH - 262501
PH :9634092692.

PRATAPNAGAR

3272. SHAKUMBARI AUTOMOBILES PVT LTD (--01), NEAR AISHWARYA FILLING STATION, LAMBGAON, PRATAPNAGAR, DISTRICT TEHRI., UTTARAKHAND - 249165
PH :9927877715.

RAIWALA

3273. SHAKUMBARI AUTOMOBILES PVT LTD (--01), KHAND,GAON-1,RAIWALA,, TEHSIL RISHIKESH, - 249205

RAMNAGAR

3274. NAINITAL MOTORS PVT LTD (--01), BASAI, KASIPUR ROAD, RAMNAGER - 244137

RANIKHET

3275. NAINITAL MOTORS PVT LTD (--01), GANYADYOLI, NEAR DRUG FACTORY, RANIKHET DISTT. ALMORA (UTTARAKHAND) - 263645
PH :9557243222.

RISHIKESH

3276. FUTURE AUTO WHEELS PVT LTD (--01), 640, LAXMAN JHULA ROAD, RISHIKESH. DISTT. DEHRADUN, UTTARAKHAND - 249201

ROORKEE

3277. SHAKUMBARI AUTOMOBILES PVT LTD (--01), 3RD KM STONE, DELHI-ROORKEE HIGHWAY, NEAR IOC PETROL BUNK, ROORKEE DISTT HARIDWAR - 247667
PH :7055104191.

RUDRAPRAYAG

3278. ROHAN MOTORS LTD (--01), GULABRAI-BADRINATH ROAD, RUDRAPRAYAG - 246171
PH :8650876815.

RUDRAPUR

3279. AKANKSHA AUTOMOBILES (RUDRAPUR) PVT LTD (--01), KICHHA BYE PASS ROAD, INDUSTRIAL AREA, RUDRAPUR - 263153

SELAQUI

3280. ROHAN MOTORS LTD (--01), KHASRA NO.783, BAHADURPUR ROAD, NH-72, SELAKUI, DISTT. -DEHRADUN, UTTARAKHAND. - 248011
PH :8006000439.

SITARGANJ

3281. AKANKSHA AUTOMOBILES (RUDRAPUR) PVT LTD (--01), PLOT NO.228/5 AND 228/6 KHATIMA ROAD, SITARGANJ, DISTT - RUDRAPUR, UTTARAKHAND. - 262405

SRINAGAR

3282. SHAKUMBARI AUTOMOBILES PVT LTD (--01), SRICOT GANAGANALI , NEAR MEDICAL COLLEGE, PO- SRICOT, SRINAGAR - 246174

TEHRI

3283. DD MOTORS (A DIVISION OF D.D. MOTORS MOBILITY) (--01), PLOT NO. 541, SECTOR-8E, DISTT. - NEW TEHRI - 249001

UTTARKASHI

3284. DD MOTORS (A DIVISION OF D.D. MOTORS MOBILITY) (--01), HOTEL RAMOLA, BARETHI CHUNGI, GANGOTRI NATIONAL HIGHWAY, UTTARKASHI. - 249151

VIKAS NAGAR

3285. ROHAN MOTORS LTD (--01), KHASRA NO. 433/79/2, JEEVANGARH, POST OFFICE-AMBARI, CHAKRATA-BARKOT ROAD, VIKAS NAGAR. - 248198
PH :9897507410.

WEST BENGAL

ALIPURDUAR

3286. PODDAR CAR WORLD PVT LTD (--01), BIRPARA MORE, COOCH BEHAR ROAD, BESIDE GOYENKA PETROL PUMP, ALIPURDUAR, WEST BENGAL. - 736121

AMTALA

3287. BHANDARI AUTOMOBILE PVT LTD (--01), VILLAGE - UDAYRAMPUR, P.O. - KANYANAGAR, P.S. - BISHNUPUR, AMTALA, DIST.-24 PARGANAS SOUTH, WEST BENGAL - 743398
PH :9903850402.

ARAMBAGH

3288. SANEI MOTORS PVT LTD (--01), R.S. DAG NO. 1887, R.S. KHATIAN NO. 104, HAL KHATIAN NO. 1233, MOUZA-PARUL, J.L.NO. 38, R.S.NO. 3111, P.S. ARAMBAGH, DISTT. HOOGHLY, WEST BENGAL - 712601
PH :8584050184.

ASANSOL

3289. BEEKAY AUTO PVT LTD (--01), CHANDA MORE, N.H.-2, ASANSOL - 713301

ASHOKNAGAR

3290. STARBURST MOTORS PVT LTD (--03), JESSORE ROAD, MANIKNAGAR, KHOSDELPUR MORE, P.S. – ASHOKNAGAR, NORTH 24 PARGANAS, WEST BENGAL. - 743222

BADURIA

3291. PREMIER CAR WORLD PVT LTD (--01), VILL-KIRRTIPUR, P.O- MANDRA, P.S - BADURIA, DIST - NORTH 24 PARGANAS, WEST BENGAL. PIN - 743438. - 743438
PH :9831414956.

BAGDAH

3292. SANEI MOTORS PVT LTD (--01), C/O, DINABANDHU TARAFDAR, S/O LATE NARENDRANATH TARAFDAR, VILLAGE – HALENCHA SOUTH, P.O. – HALENCHA COLONY, P.S. – BAGDAH, DISTRICT – NORTH 24 PARGANAS, WEST BENGAL. - 743270

BAHRAMPUR

3293. BEEKAY AUTO PVT LTD (--01), BOKULTALA (PASCHIM GAMINI), NH-34, BAHARAMPUR, DISTT. MURSHIDABAD. - 742101
PH :267340.

BAJKUL

3294. BHANDARI AUTOMOBILE PVT LTD (--01), VILLAGE – KAPTYAPA BARI, P.O. – KAJLAGARH, P.S. – BHAGWANPUR, BAJKUL, DISTRICT – PURBA MIDNAPORE. - 721626

BAKSHIRHAT

3295. PODDAR CAR WORLD PVT LTD (--01), JORAIMORE, BAKSHIRHAT, BALA KUTHI,BAKSHIRHAT - 736131

BALAGARH

3296. SANEI MOTORS PVT LTD (--01), DAG NO. 671, MOUZA - BARUIPARA, J L NO. 100, P.O. - BALAGARH, DIST.-HOOGLY, WEST BENGAL - 712501
PH :8584050184.

BALURGHAT

3297. J K WHEELS PVT LTD (--01), BARO RAGHUNATHPUR, P.O. - BELTALA PARK, P.S. - BALURGHAT, DIST.-DAKSHIN DINAJPUR. - 733103
PH :9064301464.

BANDARGACHH

3298. PODDAR CAR WORLD PVT LTD (--01), OPPOSITE COMMUNITY HEALTH CENTRE, PHANSIDEWA, BANDAR GACHH, WEST BENGAL 734014 - 734014

BANDEL

3299. SANEI MOTORS PVT LTD (--03), C/O G.S. LAMINATOR, BANDEL STATION ROAD, HOOGLY 712123 - 712123

BANKURA

3300. BHANDARI AUTOMOBILE PVT LTD (--02), PLOT NO.-156, KH NO.-173, MITHILA MOUZA, AT/PO-BANKURA (WB) - 722101
PH :256766.

BARASAT

3301. PREMIER CAR WORLD PVT LTD (--01), R.S DAG NO. 512 AND PARTY IN DAG NO. 513, MOUZA-KHILKAPUR, P.O BARASAT, POLICE STATION: DUTTA PUKUR, TOUZI NO. 146, J.L NO. 4, DISTRICT – NORTH 24 PARGANAS, WEST BENGAL - 700125
PH :8420122407.

BARDDHAMAN

3302. BEEKAY AUTO PVT LTD (--03), NH-2, PAMRA VILLAGE ROAD, CHANDNI MORE, SATTAR MILE, BURDWAN, WEST BENGAL - 713101

BARJORA

3303. BHANDARI AUTOMOBILE PVT LTD (--01), VILLAGE + P.O. + P.S. – BARJORA, MOUZA – BARJORA, JL NO. 46, KHATIAN NO. 3380, PLOT NO. 2795, BARJORA DISTRICT – BANKURA, WEST BENGAL. - 722202
PH :8016087297.

BAROBISHA

3304. PODDAR CAR WORLD PVT LTD (--01), NH-17, BALAKUTHI, BAKSHIRHAT, COOCHBEHAR,, WEST BENGAL (NH 31C, ALIPURDWAR ROAD, BAROBISHA, - 736131

BARRACKPORE

3305. STARBURST MOTORS PVT LTD (--02), NEAR RAIL GATE, WARD NO. 24, WEST BARASAT ROAD, P.S. – TITAGARH, BARRACKPORE, DISTRICT – NORTH 24 PARGANAS, KOLKATA. - 700120
PH :8335061333.

BARSUNDARA

3306. BHANDARI AUTOMOBILE PVT LTD (--05), PLOT NO. 610, BARSUNDARA, ISHWARDAHA, JALPAI, P.S. BHAWANIPUR, EAST MIDNAPORE. WEST BENGAL - 721654
PH :9933055539.

BASIRHAT

3307. BHANDARI AUTOMOBILE PVT LTD (--03), RAGHUNATHPUR, TALKI ROAD, BASIRHAT NR. INDIAN PERTOL PUMP, NORTH-24 PARGANAS. - 743428

BELACOBA

3308. PODDAR CAR WORLD PVT LTD (--01), PRASANNA NAGAR, BELACOBA, BATTALA, JALPAIGURI - 735133 - 735133
PH :8945533002.

BELDA

3309. BHANDARI AUTOMOBILE PVT LTD (--01), AT VILLAGE BARAMATKATPUR, P.O -LALNAGAR,BELDHA - 721424

BIDHANNAGAR

3310. SEVOKE MOTORS PVT LTD (--01), MURALIGANG BIDHAN NAGER, OPP OF MURALIGANG HIGH SCHOOL - 734426

BIRPARA

3311. SEVOKE MOTORS PVT LTD (--01), BHAGAT PARA, NH - 31, MADARIHAT ROAD, BIRPARA, BESIDE TASHI HOTEL, OPP - HIMALYAN HOTEL, P.S - MADARIHAT, DIST - ALIPURDUAR, PIN - 735204 - 735204
PH :9800069144.

BISHNUPUR

3312. BHANDARI AUTOMOBILE PVT LTD (--01), STATION ROAD, P.O+P.S- BISHNUPUR, DIST: BANKURA, WEST BENGAL - 722122
PH :9933055539.

BOLPUR

3313. SAINATH AUTOLINKS PVT LTD (4402--03), KABI JOYDEB ROAD, NEAR BOLPUR BY PASS, BOLPUR, DIST: BIRBHUM

BONGAON

3314. STARBURST MOTORS PVT LTD (--01), 376/D, R D B ROAD, NEAR JESSORE ROAD, BAKSHIPALLY, BONGAON, NORTH 24 PARGANAS, WEST BENGAL - 743235
PH :9748298939.

BUDGE BUDGE

3315. ONE AUTO PVT LTD (--01), MAHESH TALA, NEAR DAKGHAR KALIMANDIR, BUDGE BUDGE TRUNK ROAD, DAKGHAR, WARD NO. 22, POLICE STATION-MAHESHTALA, WEST BENGAL - 700141

C K ROAD

3316. BHANDARI AUTOMOBILE PVT LTD (--01), P.O:SAT BANKURA, PS:GARBETA, CHANDRAKONA ROAD, DIST. PASCHIM MIDNAPORE, WEST BENGAL - 721252

CANNING

3317. ONE AUTO PVT LTD (--01), SUSUMAPALLY, CANNING, DIST – SOUTH 24 PARGANAS, WB - 743329
PH :8442830001.

CHAKDAH

3318. BHANDARI AUTOMOBILE PVT LTD (--01), VILLAGE – PUMLIA, P.O. – CHAKDAHA, DISTRICT – NADIA, WEST BENGAL. - 741222

CHANCHAL

3319. J K WHEELS PVT LTD (--01), CHANCHAL AZAD PALLY, OPPOSITE OF PWD 2ND GATE, P.O - CHANDRAPARA, P.S - CHANCHAL, DIST - MALDA - 732123 - 732123
PH :9734963360.

CHANDITALA

3320. BHANDARI AUTOMOBILE PVT LTD (--01), RS DAG NO.2986, LR DAG NO. 3150, UNDER L R KHATIAN NO.3859, MOUZA- KRISHNARAMPUR, J.L. 59, POLICE STATION- CHANDITALA, HOOGHLY, WEST BENGAL - 712702
PH :6296900498.

CHANDRAKONA

3321. BHANDARI AUTOMOBILE PVT LTD (--02), AT. VILL. GOSAI PO+PS CHANDRAKONA TOWN, MOUZA DHARABILA, J.L.NO. 095, KHATIAN NO. 315, PLOT NO. 203 & 189, NEAR MUNIPAL GATE TOWARDS C.K. ROAD. - 721201
PH :8945526833.

CHHATNA

3322. BHANDARI AUTOMOBILES PVT LTD (--01), VILLAGE: DUBRAJPUR, P.O. GORH, DUBRAJPUR, P.S. CHHATNA DIST: BANKURA - 722132

CONTAI

3323. BHANDARI AUTOMOBILE PVT LTD (--03), SERPUR BAMUNBAR,P O- MARISHDA, NEAR MECHEDA BYPASS, CONTAI, WEST BENGAL - 721401

COOCHBEHAR

3324. PODDAR CAR WORLD PVT LTD (--01), CHAKCHAKA, NEELKUTHI BAZAR, NEAR ADA FACTORY, NH-31, COOCH BEHAR, WEST BENGAL. - 736101

DARJEELING

3325. BEEKAY AUTO PVT LTD (4301--05), MERRY VILLA, DARJEELING, DISTRICT-DARJEELING. - 734101

DHUPGURI

3326. BEEKAY AUTO PVT LTD (--01), MOUZA – DHUPGURI, PLOT NO. 1814, WARD NO. 16, DHUPGURI, DISTRICT – JALPAIGURI, WEST BENGAL. - 735210

DIAMOND HARBOUR

3327. ONE AUTO PVT LTD (--01), VILLAGE – CHEWRA, OPPOSITE – K.E. CARMEL SCHOOL, P.O. – SARISHA HAT, P.S. – DIAMOND HARBOUR, DISTRICT – 24 PARGANAS (S) , WEST BENGAL. - 743368
PH :8584862243.

DINHATA

3328. BEEKAY AUTO PVT LTD (--01), ADDRESS: VILLAGE - KARISHAL, MAIN ROAD, P.O-DINHATA, DIST - COOCHBEHAR, - 736135
PH :9932049347.

DUDHIA

3329. PODDAR CAR WORLD PVT LTD (--01), MIRIK ROAD, DUDHIA, WEST BENGAL - 722133

DURGAPUR

3330. SAINATH AUTOLINKS PVT LTD (4402-44-01), PLOT NO-743, MAUZA FRIDPUR, BURDWAN, DURGAPUR - 713213

DURLAVPUR

3331. PODDAR CAR WORLD PVT LTD (--01), VILL+PO – DURLAVPUR, PS- GANGAJALGHATI, DIST-BANKURA, PIN- 722133 - 722133

FALAKATA

3332. PODDAR CAR WORLD PVT LTD (--01), DAKSHIN PARANGAPAR, KHATIAN NO. 167/1 JL NO. 60, DAG NO. 652/1159, P.S. – FALAKATA , DISTT ALIPURDWAR - 735211
PH :8945533002.

GAZOLE

3333. J K WHEELS PVT LTD (--01), MOUZA-BAJEGAIRAL, RANIGANJ, PURBAPARA, KAMALDANGA, P.S- GAZOLE, DIST-MALDA, PIN - 732138 - 732138
PH :9734963360.

GHATAKPUKUR

3334. DEWARS GARAGE LTD (--01), BASANTI HIGHWAY,MOUZA NARAYANPUR , POLICE STATION,BHANGAR, WEST BENGAL - 743502

GHATAL

3335. BHANDARI AUTOMOBILE PVT LTD (--01), VILL. NIMTOLA, P.O. & P.S. DASPUR, GHATAL,WEST MIDNAPORE,WEST BENGAL - 721211

GOPIBALLAVPUR

3336. BHANDARI AUTOMOBILE PVT LTD (--01), JL NO. 1103, KHATIAN NO. 1103, PLOT NO. 438, VILLAGE + P.O. + P.S. – GOPIBALLVPUR , MOUZA – GOPIBALLVPUR, WEST MIDNAPUR, WEST BENGAL. - 721506

HALDIA

3337. BHANDARI AUTOMOBILE PVT LTD (--04), BALGHASIPUR, BHABANIPUR, PURBA MEDIANPUR, HALDIA - 721657

HOWRAH

3338. BHANDARI AUTOMOBILE PVT LTD (--01), BANKRA THANA,DOMJUR,HOWRAH. - 711403

3339. PREMIER CAR WORLD PVT LTD (--02), MOUZA – PRASASTHA, P.S. – DOMJUR, UNDER MOHIARY 2 NO. GRAM PANCHAYAT, ANKURHATI, HOWRAH, WEST BENGAL. - 711302

ILLAMBAZAR

3340. BEEKAY AUTO PVT LTD (--01), PLOT NO-615,616,618,JL NO-87,MOUZA-PAYER - 731214

JAGULI

3341. OSL MOTOCORP PVT LTD (--01), DAG NO-947,KHATIANNO: 54/1,P.S HARINGHANTA - 741221

JALPAIGURI

3342. PODDAR CAR WORLD PVT LTD (--01), COLLEGE PARA, SIRISHTALA, NEAR ASSAM MORE, JALPAIGURI, WEST BENGAL. - 735101
PH :8945533002.

JAYGAON

3343. SEVOKE MOTORS PVT LTD (--01), HOUSE NO.43, WARD NO.11/22, N.S ROAD DARAGAON, P.S - JAYGAON, DISTT. ALIPURDUAR, WEST BENGAL - 736182
PH :9433825851.

JHARGRAM

3344. BHANDARI AUTOMOBILE PVT LTD (--01), DAG NO.383, KHATAN NO. JL396, WARD NO.11, RAJBATI CAMPUS, JHARGRAM, WEST BENGAL - 721507

KADAMBAGACHI

3345. STARBURST MOTORS PVT LTD (--04), MOUZA - PURBA ICHAPUR, J L NO. 111, RESU NO. 131, DAG NO. 385, KHATIAN NO. L R 754, KADAMBAGACHI, P.S. - BARASAT, DIST.-NORTH 24 PARGANAS, WEST BENGAL. - 700125
PH :8336933410.

KALIMPONG

3346. BEEKAY AUTO PVT LTD (--01), 10TH MILE, GUMBA HATTA, PO&PS -KALIMPONG, DIST - KALIMPONG, WB. - 734301
PH :9932049347.

KALNA

3347. BEEKAY AUTO PVT LTD (--01), KALNA ROAD, NEAR KALNA SUB DIVISIONAL HOSPITAL, KALNA, PO+PS: KALNA, DISTT. BURDWAN, (W.B.) - 713409
PH :9932251483.

KALYANI

3348. STARBURST MOTORS PVT LTD (--01), KALYANI INDUSTRIAL GROWTH CENTRE, PHASE-III, A-5 (OPP. U I C UDYOG, NEAR: J I S COLLEGE), KALYANI. - 741234

KHARAGPUR

3349. BHANDARI AUTOMOBILE PVT LTD (--01), BHANDARI BUILDING, JHAPATAPUR, KHARAGPUR, WEST BENGAL - 721301

3350. PODDAR CAR WORLD PVT LTD (--01), RS DAG NO - 147, RS KHATIAN NO 7, MOUZA - MOBARAKCHAK, JL NO-210, PS - KHARAGPUR - 721301
PH :9831348626.

KHATRA

3351. BHANDARI AUTOMOBILE PVT LTD (--01), VILLAGE - SENAPATI, P.O & P.S - KHATRA, MOUZA-SENAPATI, JL NO.189, KHATIAN NO.659, PLOT NO.33/34, DISTT. BANKURA, WEST BENGAL. - 722140

KHORIBARI

3352. PODDAR CAR WORLD PVT LTD (--01), DOHAGURI, KHORIBARI, WEST BENGAL 734427 - 735222

KOLKATA

3353. MACHINO TECHNO SALES LTD (--02), 48 A, TARATALA ROAD, KOLKATA - 700066
3354. DEWARS GARAGE LTD (--01), (PROP. DELTA INTERNATIONAL LTD.), 14 BRITISH INDIAN STREET, CALCUTTA - 700069
3355. MACHINO TECHNO SALES LTD (--01), 21/1 DARGA ROAD, (PARK CIRCUS), CALCUTTA - 700017
3356. PREMIER CAR WORLD PVT LTD (--01), AGARPARA JUTE MILL, 28-B.T.ROAD, P.O.: -KAMARHATI, DISTT.-KOLKATA - 700058
3357. BHANDARI AUTOMOBILE PVT LTD (--01), BUDGE BUDGE TRUNK ROAD, NEW GOPALPUR, SARKARPOOL, MAHESHTALA, DISTT. SOUTH 24 PARGANAS, WEST BENGAL - 700143
3358. SANEI MOTORS PVT LTD (--01), 16/2 CANAL EAST ROAD, NEAR MANIKTALA POLICE STATION,KOLKATA - 700067
3359. ONE AUTO PVT LTD (--02), 62 EAST TOPSIA ROAD, P.S. TILJALA, ARUPOTA, KOLKATA , WEST BENGAL - 700105
3360. ONE AUTO PVT LTD (--01), JL NO.3, MOUZA-JAGADIPOTA, P.S:SONARPUR, KHEYADAHA NO.2, GRAM PANCHAYAT, DISTT. SOUTH 24 PARGANAS. - 700099
3361. SANEI MOTORS PVT LTD (--02), 235, HATIYARA ROAD, SITALATALA, BAGUIATI, KOLKATA, WEST BENGAL - 700059
3362. OSL MOTOCORP PVT LTD (--01), 49 DEBENDRA CHANDRA DEY ROAD, LANE BESIDE SILVER SPRING CLUB, E.M. BYE-PASS, KOLKATA - 700015
3363. STARBURST MOTORS PVT LTD (--05), R.S & L.R. DAG NO. 3434, MOUZA- GOPALPUR, JL NO. -02, RS NO. -140, LR KHATIAN NO. -5638, NEW TOWN, RAJARHAT - 700136
PH :9681080301.
3364. BHANDARI AUTOMOBILE PVT LTD (--C1), PLOT NO. IID/15, ACTION AREA 2D, NEW TOWN, P.S. RAJARHAT, KOLKATA, WEST BENGAL
PIN-700156 - 700156
3365. JYOTE MOTORS PVT LTD (--01), NAZIRABAD MAIN ROAD, NAZIRABAD, ANANDAPUR, NEAR BISHNU BIJOLI GARDEN, KOLKATA, PIN-700150, WEST BENGAL - 700150

KOTULPUR

3366. BHANDARI AUTOMOBILE PVT LTD (--01), KHATIAN NO.644, PLOT NO.373, JL NO. 101, VILLAGE - MULDARA, P.S. + P.S. - KOTULPUR, DISTT.-BANKURA, WEST BENGAL. - 722141

KRISHNANAGAR

3367. BHANDARI AUTOMOBILE PVT LTD (--02), PLOT NO.-1874, MOUZA-GOBINDSARAK ,J.K. NO. 94, PS-KOTWAL, OLD WARD NO. 20, LAL MOHAN GHOSH ROAD, KRISHNANAGAR - 742011

LALGARH

3368. BHANDARI AUTOMOBILE PVT LTD (--01), PO & PS- LALGARH, DISTRICT- JHARGRAM. - 721516

MADHYAMGRAM

3369. STARBURST MOTORS PVT LTD (--01), 9/1, HEMANTA BOSE SARANI, BASUNAGAR, NEAR DEAF & DUMB SCHOOL, UDAYRAJPUR, MADHYAMGRAM - 700129

MALBAZAR

3370. BEEKAY AUTO PVT LTD (--01), CALTEX MORE, VILLAGE + P.S. – MALBAZAR AND DISTRICT – JALPAIGURI . - 735221

MALDA

3371. J K WHEELS PVT LTD (--01), GABGACHHI, N.H. 34, MALDA, - 732103

MANGPOO

3372. PODDAR CAR WORLD PVT LTD (--01), OPPOSITE QUININER FACTORY, MUNGPOO , CINCHONA PLANTATION, WEST BENGAL - 734313

MATHABHANGA

3373. BEEKAY AUTO PVT LTD (--01), SITAKULCHI ROAD, WARD NO.9,MATHABHANGA, DISTRICT – COOCHBEHAR. - 736146

MIDNAPORE

3374. BHANDARI AUTOMOBILE PVT LTD (--01), JL NO.190, KHAITAN NO. 889 VILL + P.O. TALKUI, N.H.60, - 721101

MOHANPUR

3375. BHANDARI AUTOMOBILE PVT LTD (--01), VILLAGE-NAYAGAON, P.O.-PAROI, P.S. -MOHANPUR, MOUZA - NAYAGAON, JL NO.395, KHATIAN NO.175/1, PLOT NO.895, DISTT. -PASCHIM MIDNAPUR,W.BENGAL. - 721436
PH :9933055539.

NAGRAKATA

3376. PODDAR CAR WORLD PVT LTD (--01), OPPOSITE HERO SHOWROOM, NEAR B.D.O OFFICE, SUKHANIBASTI, NAGRAKATA,WEST BENGAL - 735225

NAIHATI

3377. PREMIER CAR WORLD PVT LTD (--01), P.O. BHATPARA, GRAM-MUKTARPUR, P.S. - JAGATDAL, DIST-24 PGS (N), NAIHATI (WB) - 743123
PH :801700824.

NAKASHIPARA

3378. BHANDARI AUTOMOBILE PVT LTD (--01), L R DAG NO. 7271, UNDER L R KHATIAN NO. 6734, MOUZA - DEBAGRAM, J L NO. 60, POLICE STATION - KALIGANJ, BLOCK - KALIGANJ, NAKASHIPARA, DIST.-NADIA, WEST BENGAL. - 741138
PH :9163314418.

NAXALBARI

3379. BEEKAY AUTO PVT LTD (--01), MOUZA – GENI, KHATIAN NO.275, PARGANA-HATIGHISHA, P.S. NAXALBARI, DISTT. DARJEELING, WEST BENGAL - 734429

OODLABARI

3380. PODDAR CAR WORLD PVT LTD (--01), PLOT NO : 1144, TOUZI NO -84, OODLABARI , 735222 - 735222

PANCHLA

3381. BHANDARI AUTOMOBILE PVT LTD (--01), L.R DAG NO 3274, UNDER L.R KHATIAN NO 3044, MOUZA-MALLICKBAGAN, JL NO-7, POLICE STATION – PANCHLA, DIST- HOWRAH - 711310
PH :9073664926.

PANDUA

3382. BHANDARI AUTOMOBILE PVT LTD (--01), GT ROAD, PANDUA, NEAR KAKOLI CINEMA HALL, OPP. POWER HOUSE, HOOGLY, WEST BENGAL. - 712149
PH :9073912566.

PANSKURA

3383. BHANDARI AUTOMOBILE PVT LTD (--01), MOUZA – PASCHIM NEKRA, JL NO.98, LR NO.1154, LR NO.1156, PANSKURA, WEST BENGAL. - 721139
PH :9933055539.

PATASHPUR

3384. PODDAR CAR WORLD PVT LTD (--01), VILL - MOTIRAMPUR, PO MOTIRAMPUR, PS - PATASHPUR, DIST PURBA MIDNAPORE - 721439

PEDONG

3385. SEVOKE MOTORS PVT LTD (--01), TOPKHANA, DOKYONG 1, PEDONG, DIST: KALIMPONG, PIN:734311 - 734311

PURULIA

3386. SAINATH AUTOLINKS PVT LTD (4402--02), PO. LAKDA, VILLAGE-DADKA , ON RANCHI ROAD, PURULIA - 723149

RAGHUNATHPUR

3387. BEEKAY AUTO PVT LTD (--01), MOUZA – BUNDLA, J.L. NO. 197, PLOT NO. 2656, KHATIAN NO. LR 207, P.O. – RAGHUNATHPUR, P.S. – RAGHUNATHPUR, DISTRICT – PURULIA. - 723133

RAIGANJ

3388. J K WHEELS PVT LTD (--01), JL NO. 150, KHATIAN NO. 168/3 & 168/4, PLOT NO. 4158., P.S. – RAIGANJ, MUNICIPALITY – RAIGANJ, WARD NO. 11, HOLDING NO. 577/N, MOUZA – RAIGANJ, DISTRICT – UTTAR DINAJPUR, - 733134
PH :9735008842.

RAMPURHAT

3389. BEEKAY AUTO PVT LTD (--01), PLOT NO 131, JL NO 104, MOUZA -BATAIL,RAMPURAHAT - 731221

RANAGHAT

3390. STARBURST MOTORS PVT LTD (--01), THANA: GANGNAPUR, ADSR OFFICE, 151 NO.MOUZA PATULI, PLOT NO.309, RANAGHAT, DISTT: NADIA - 741256

RUPNARAYANPUR

3391. BEEKAY AUTO PVT LTD (--01), P.S. – SALANOUR, UNDER MOUZA – JEMARI, J.L. NO. 32, PLOT NO. 343-344, KHAITAN NO. 933, RUPNARAYANPUR, PASCHIM BARDHAMAN DISTRICT, WEST BENGAL. - 713335

SABANG

3392. BHANDARI AUTOMOBILE PVT LTD (--01), VILLAGE - PAIKAN DAKSHINBARH, P.O. - DHANSWARPUR & P.S. - PINGLA, DIST. -PASCHIM MIDNAPORE, SABANG - 721 166, WEST BENGAL. - 721166
PH :9933055539.

SAINTHIYA

3393. SAINATH AUTOLINKS PVT LTD (--01), SAINTHIA SURI ROAD,, OPPOSITE YAMAHA SHOWROOM, - 731234

SEORI

3394. BEEKAY AUTO PVT LTD (--01), RAMBADANPUR, NEAR SP MORE, SIURI, BIRBHUM - WEST BENGAL - 731101

SHYAMPUR

3395. SANEI MOTORS PVT LTD (--01), VILLAGE + P.O. – GOBINDAPUR, P.S. – SHYAMPUR, DISTRICT – HOWRAH, WEST BENGAL . - 711314
PH :8584050184.

SILIGURI

3396. BEEKAY AUTO PVT LTD (4301-43-01), NH-31, P.O. MATIGARA,SILIGURI. - 734428
3397. BEEKAY AUTO PVT LTD (4301-43-04), AMAI DIGHI, PHOOL BARI,STATE HIGHWAY -12, SILIGURI - 734001
3398. SEVOKE MOTORS PVT LTD (4302-43-01), 233, SEVOKE ROAD,2ND MILE, SILIGURI - 734001
PH :9706010366.
3399. PODDAR CAR WORLD PVT LTD (--02), VILL. EAST DHANTALLA, FULBARI II G.P, P.O SATELLITE TOWNSHIP, DIST- JALPAIGURI - 734015
PH :8945533002.

3400. PODDAR CAR WORLD PVT LTD (--03), OPPOSITE TO GANAPATI PETROL PUMP, KHAPRAIL MORE, SILIGURI - 734005

SINGUR

3401. ONE AUTO PVT LTD (--03), OPPOSITE TO TAPSI MAILIK KRISHAK BAZZAR - 712409

SITAI

3402. PODDAR CAR WORLD PVT LTD (--01), NETAJI MORE, NEAR NETAJI BAJAR , P.S SITAI , DISTRICT : COOCH BEHAR, PIN 736167 - 736167

SONADA

3403. SEVOKE MOTORS PVT LTD (--01), RATO MATEY DARA, NEAR PETROL PUMP,P.O- SONADA, WEST BENGAL PIN - 734209 - 734209
PH :9800069144.

SONAMUKHI

3404. BHANDARI AUTOMOBILE PVT LTD (--01), J L NO. 77, KHATIAN NO. 360, PLOT NO. 114/287, SONAMUKHI BISHNUPUR ROAD, VILLAGE - CHURAMANIPUR, P.O. & P.S. - SONAMUKHI, WEST BENGAL. - 722207
PH :9933055539.

SREERAMPUR

3405. BHANDARI AUTOMOBILE PVT LTD (--01), BANGIHATI (MADPUR) DELHI ROAD, SREERAMPUR, DISTT: HOOGHLY, WB - 712203

SUNDARA

3406. PODDAR CAR WORLD PVT LTD (--01), NH 14, SITARAMPUR, OPP. INDIAN OIL PETROL PUMP, SUNDARA , PASCHIM MEDINIPUR - 488333

TAMLUK

3407. BHANDARI AUTOMOBILE PVT LTD (--01), MOUZA PADUMBASAN, WARD NO 10, JL NO:144, DISTT: EAST MIDNAPUR, WEST BENGAL - 721636

TARAKESHWAR

3408. SANEI MOTORS PVT LTD (--01), MOUZA BAIDYAPUR, UNDER BALIGORI(1), GRAM PANCHAYET, TARAKESHWAR, DISTT. HOOGLY, WEST BENGAL.
PH :8584050184.

TOOFANGANJ

3409. PODDAR CAR WORLD PVT LTD (--01), POWER HOUSE PARA, PO ANDARANFULBARI (WEST), TUFANGANJ, COOCHBEHAR, PIN-736159, WEST BENGAL - 736159
PH :8945533002.

UDAYNARAYANPUR

3410. BHANDARI AUTOMOBILE PVT LTD (--01), VILLAGE-JANGALPARA BELGRAM, PS-UDAYNARAYANPUR, DIST- HOWRAH, WEST BENGAL. - 711226
PH :9073664902.

ULUBERIA

3411. BHANDARI AUTOMOBILE PVT LTD (2401--01), HOLDING 1242A, BANITABLA, P.O+P.S: ULUBERIA, NH-6, DISTT: HOWRAH, WEST BENGAL - 711316

ANDHRA PRADESH

MACHILIPATNAM

1. SRI MARUTI MECHANICAL WORKS (4172--), D.NO 4-121, PLOT NO 26,27, , POTEPALLI INDUSTRIAL PARK, MACHLIPATNAM- 521002, - 521002
PH :9440538012.

NANDYAL

2. MARUTI MOTORS (2635--), PLOT NO 428, NH-18 , NEAR RAILWAY GATE , NANDYAL- 518501, - 518501
PH :9440554617.

PATTIKONDA

3. ROYAL MOTORS (5776--), ADONI ARTS & SCIENCE, COLLEGE ROAD ADONI,PATTIKONDA-518302, DISTRICT-KURNOOL, ANDHRA PRADESH - 518302
PH :9866362847.

SRIKALAHASTI

4. SUNDEEP CARS (5972--), 16/550, PANAGAL ROAD, OPP. NTR PARK, SRIKALAHASTI - 517644, TIRUPATI DISTRICT, ANDHRA PRADESH - 517644
PH :9848294869.

ASSAM

BISHAWANATH CHARIALI

5. BINA AUTOMATION (3677--), , P.O. BISHAWANATH CHARIALI, DISTT. SONITPUR, ASSAM-784 176 - 784176
PH :9957309744.

BOKAJAN

6. SHREE GANESH MOTORS (6040--), SUKHANJAN GF ROAD,P.O:BOKAJAN(C.F.), DISTRICT KARBI ANGLONG, ASSAM - 782480
PH :9435167138.

DHALIGAON

7. ADHIKARY MOTOR WORKS (4049--), KUKURMARI, DHALIGAON, DIST. - CHIRANG, ASSAM - 783385 - 783385
PH :9435020938.

DHUBRI

8. BRAHMAPUTRA MOTOR SERVICING STATION (3127--), G.T.B ROAD, DHUBRI-783 301, (ASSAM), - 783324
PH :9101176148.

DIGBOI

9. GAURI AUTOMOBILES (3760--), MULIABARI, DIGBOI 786 171, , - 786171
PH :9435137556.

GOALPARA

10. BHARAT ENGINEERING WORKS (969--), PO - BALDMARI, AGIA ROAD, GOALPARA (ASSAM) -783 102, - 783102
PH :9864767777.

GOSSAIGAON

11. A.R. AUTOMOBILES (4544--), NH-31C, HABRUBIL, GOSSAIGAON, DIST KOKRAJHAR, ASSAM-783360 - 783360
PH :9435109765.

LUMDING

12. BEDI MOTORS (5827--), MAIN ROAD,NORTH LUMDING,LUMDING-782447, DISTRICT - NAGAON, (ASSAM), - 782447
PH :9957333991.

PATHSALA

13. USHA AUTOMOBILES (4240--), N.H 31,PATHSALA-781325, DISTRICT-BARPETA, ASSAM, - 781325
PH :9401310431.

BIHAR

BEGUSARAI

14. K.B. MOTORS (4768--), NH-31, SINGHAUL, POKHAR, BEGUSARAI-851134, BIHAR - 851134

BHAGALPUR

15. RUPRA AUTOMOBILE (1577--), EAST OF AIRPORT, BHAGALPUR-813 210, P.O. BAHADURPUR, (BIHAR) - 813210
PH :9334385521.

DARBHANGA

16. SINGH MARUTI CARE (2277--), RAJKUMARGANJ, P.O. LALBAGH, DARBHANGA-846 004, (BIHAR), - 846004
PH :9431293796.

HAJIPUR

17. ALFA AUTO (5454--), PASWAN CHOWK, NH-13, HAJIPUR, DISTRICT - VAISHALI, BIHAR - 844 01, - 844101

MADHEPURA

18. KRISHNA AUTOMOBILES (2639--), SINGHSWAR ROAD, PATHRAHA, MADHEPURA-852 213, (BIHAR) - 852213
PH :9430583338.

MADHUBANI

19. VIDYAPATI AUTOMOBILE (4234--), BHAUARA, GANGASAGAR, MADHUBANI, BIHAR - 847212 - 847212

MUZAFFARPUR

20. DYNAMIC MARUTI SERVICE CENTRE (1163--), HARI SHARAN MARG, AMGOLA, POST OFF RAMNA, MUZAFFARPUR-842 002, - 842002

PATNA

21. TIRUPATI AUTO (1956--), ASHIANA MORE, BAILEY ROAD OPPOSITE UNION BANK, RAJABAZAR, PATNA-14 - 800014

SASARAM

22. TRIPTY CAR SERVICE CENTRE (5535--), NEAR RELIANCE PETROL PUMP, G.T. ROAD,NH-2,SASARAM-821115, DISTRICT-SASARAM, BIHAR - 821115
PH :9934792421.

SITAMARHI

23. SITAMARHI AUTO CARE (6050--), INDUSTRIAL AREA,RAJOPATTI, PO.SITAMARHI-843302, DISTRICT-SITAMARHI , BIHAR - 843302
PH :9430012437.

CHANDIGARH

CHANDIGARH

24. CAR CLINIC (179--), PLOT NO-81, INDUSTRIAL AREA, PHASE-2, CHANDIGARH, - 160002
PH :9417216782.
25. HI-TEK MOTORZ (4743--), PLOT NO. 695, INDUSTRIAL AREA, PHASE-1, CHANDIGARH - 160002
PH :9872567868.

CHHATTISGARH

AMBIKAPUR

26. MARUTI AUTO CARE (4839--), KHARSIA NAKA, AMBIKAPUR -497001, DISTRICT-SURGUJA, CHATTISGARH - 497001
PH :9425256087.

KORBA

27. AUTO SELF SERVICE (8940--), RAILWAY STATION CANAL ROAD, NEAR SUNALIYA RAILWAY CROSSING, , MURARKA GALI, KORBA, CHATTISGARH -495678 - 495678
PH :9229495000.

AND NAGAR HAVELI AND DAMAN A

DAMAN

28. CAR ZONE (4358--), SURVEY NO. 70/3, VARKUND, OPP VEERA DA DHABA, VAPI DAMAN ROAD, DAMAN-396210 - 396210
PH :9824184449.
29. TOP GEAR (5469--), DAMAN-KUNTA ROAD.KUNTA DAMAN-396210, DISTRICT - UNION TERRITORY , GUJARAT, - 396210
PH :9825631264.

DELHI

DELHI

30. AUTOTECH ENGINEERS (4551--), PLOT NO. 20-24, MATIYALA VILLAGE, SECTOR-3, NEAR DPS DWARKA, NEW DELHI-110075 - 110075
PH :9811608008.
31. BRIGHT MOTORS (P) LTD. (885--), C-263 PEERAGARHI, OUTER RING ROAD, DELHI - 110 087, - 110087
PH :9810203018.
32. GLOBE SERVICE STATION (8961--), A-17, B1, EXTENSION MCIE, MATHURA ROAD, BADARPUR, DELHI-110 044, - 110044
PH :9540944009.
33. NAVEEN AUTOMOBILES (4934--), 37, PATPARGANJ INDUSTRIAL AREA, NEW DELHI-110092, , - 110092
PH :9911278537.
34. WIG AUTOMOBILES (8012--), D-3, S.M.A CO-OP. INDL. ESTATE, (OPP. JAHANGIR PURI CHOWK), G.T. KARNAL ROAD, DELHI-110 033 - 110033
PH :9811297607.

GOA

CURCHOREM

35. VIPUL AUTOMOBILES (5376--), PLOT NO.7,8,9,KAKODA INSUSTRIAL ESTATE, KAKODA CURCHOREM, DISTRICT - SOUTH GOA, GOA - 403706
PH :9422018746.

KUNDAIM

36. VIKAS ENGINEERING WORKS (4953--), BHOMA, KUNDAIM, GOA-403107, - 403107
PH :9823780335.

MAPUSA

37. SARDESAI AUTOMOBILES (2176--), 194, GAUNSAWADA, , NEAR MILAGRES CHURCH, MAPUSA, GOA-403 507 - 403507
PH :9764448741.

PONDA

38. DHAVLIKAR AUTOMOBILES (2041--), NO.5 TIP TOP MANSION IV, INDIRA NAGAR, DHAVALI, PONDA, GOA-403 401 - 403401
PH :9890669879.

VERNA

39. LUBRICARE SERVICES (261--), 7-D GOULLOY, NH.17 NUVEM, SALCETE, GOA-403 601 - 403601
PH :9822124376.

GUJARAT

ANAND

40. PATEL TRACTOR COMPANY (2221--), (SERVICE DIVISION), BEHIND SUNIL CHAMBERS, STATION ROAD, ANAND-388 001 - 388001
PH :9925534494.

BHARUCH

41. NEW MARUTI MOTORS (5156--), 9/16 AKASH GANGA.B/H CNG PUMP, OLD NH -8.BHOLAV , DISTRICT - BHARUCH, GUJARAT - 392001
PH :9898611424.

BHAVNAGAR

42. VIKRAM MOTOR GARAGE (127--), TAKHTESHWAR PLOT, NEAR CHANDRA BHUVAN, BHAVNAGAR - 364 002., - 364002
PH :9427145452.

BORSAD

43. SPEED AUTO (8953--), I B PETROL PUMP, VASAD-TARAPUR HIGHWAY ROAD, VILLAGE BORSAD, TALUKA BORSAD, DISTRICT ANAND, GUJARAT- 388540 - 388540
PH :9979992779.

DAHOD

44. CAR SEVA (2438--), SAINT STEPHEN SCHOOL ROAD, GODHRA ROAD,, DAHOD. PIN-389151, - 389151
PH :9426469122.

DEESA

45. VAKHARIA MOTORS (3970--), PLOT NO. 57-60, SURVEY NO. – 16/1, DEESA – PALANPUR HIGHWAY, DEESA, DISTT. – BANASKANTHA, GUJARAT - 385535
PH :9377728841.

GANDHI NAGAR

46. SHREE ARBUDA MOTORS PVT. LTD. (2151--), G.I.D.C. E-19/10/B, NEAR K-7, SECTOR 26, GANDHINAGAR, GUJARAT - 382026 - 382044
PH :9825041331.

HALOL

47. MAA MOTORS (4767--), GODHRA ROAD, NEAR TELEPHONE EXCHANGE, HALOL, GUJARAT - 389350
PH :9898610212.

IDAR

48. SUN MOTORS (5175--), IDAR-HIMMATNAGAR HIGHWAY ROAD, AT.KRUSHNAGAR.PO NETRAMLI., TA.IDER DISTRICT SABARKANTA, GUJARAT - 383430
PH :9228286768.

KALOL

49. SUNRISE AUTO CENTRE (146--), BLOCK SURVEY NO. 1141, OPP JANPATH PETROLEUM, NEAR SINDBAD HOTEL, AHMEDABAD-MEHSANA HIGHWAY, KALOL, DISTRICT – GANDHINAGAR, GUJARAT - 382721
PH :9879542207.

KAMREJ

50. PATEL MOTOR GARAGE (2764--), PLOT NO 1,2,3, NAVAGAM,, NR. MANISHA HOTEL, OPP. DADABHAGWAN TEMPLE, NAVAGAM, KAMREJ,, DIST: SURAT-394185 - 394185
PH :9825127413.

KAPADVANJ

51. DISHA MOTORS (5960--), MAHAMADPURA,KAPADVANJ-NADIAD ROAD, KAPADVANJ-387620, DISTRICT-KHEDA, GUJARAT - 387620
PH :9825641244.

LIMDI

52. PARTH AUTOMOBILES (4171--), OPP.SWAMINARAYAN TEMPLE, NH NO-8A, LIMBDI DIST, SURENDERNAGAR , PIN-363421 - 363421
PH :9426714510.

LUNAWADA

53. N.J. MOTORS (4370--), R SURVEY NO 358, MODASA HIGHWAY, MOTA SONELA, LUNAWADA, DIST. MAHISAGAR 389230 - 389230
PH :9924252700.

MEHSANA

54. SHUBH AUTO SERVICES (3367--), NEAR AGRO PETROL PUMP, OLD RTO, RAMOSNA JAKAT NAKA, MEHSANA (GUJARAT) - 384001
PH :9825322460.

NADIAD

55. SHIVAM MOTORS (4430--), PLOT NO 35/1, QUALITY SEEDS COMPOUND, NEAR BHUTIA BUNGLOW, DABHAM, NADIAD, DISTRICT KHEDA, GUJARAT- 387320 - 387320
PH :9825021960.

TALALA

56. RUBY MOTORS (5942--), TALALA ROAD , RAMRECHI(GIR), DIST - GIR, SOMNATH - 362150, , - 362150
PH :9824061044.

UNJHA

57. AMBIKA MOTORS (3932--), SADGURU COMPLEX, AHMEDABAD PALAM PUR HIGHWAY ROAD, UNJHA, MEHSANA-384170 - 384170
PH :9824517382.

VIRAMGAM

58. KRISHNA MOTOR GARAGE (4038--), OUTSIDE BHARWADI GATE, NEAR BHARAT PETROL PUMP, VIRAMGAM, - 382150
PH :9426415274.

VYARA

59. PARTH MOTORS (8928--), D-1.CITY LIGHT TOWER KAKRAPAR, BYPASS ROAD-VYARA, DISTRICT-SURAT, GUJARAT - 394650
PH :9898292020.

HARYANA

FARIDABAD

60. PERFECT AUTOZONE (P). LTD. (5667--), PLOT NO 9, ADJACENT TO UNION BANK OF INDIA, ANKHIR, OPP SEC 21-D, MAIN BADHKAL ROAD, DISTT FARIDABAD, HARYANA - 121001 - 121001

FARRUKHNAGAR

61. M R MOTORS (5946--), GURGAON-JHAJJAR ROAD,OPP. ANAAZ MANDI, FARRUKHNAGAR-123506, DISTRICT-GURGAON, HARYANA - 122506
PH :9810831200.

FATEHABAD (HARYANA)

62. DHINGRA AUTOMOBILES (1856--), G.T. ROAD, FATEHABAD, (HARYANA), - 125050
PH :9896012906.

63. MOTOR CRAFT (3064--), OPPOSITE M M COLLEGE, SIRSA ROAD, FATEHABAD, 125050 - 125050
PH :9254080200.

GANGWA

64. PANCHMUKHI AUTOMOBILES (5968--), HISSAR RAJGARH ROAD,, GANGWA-125001, DISTRICT-HISSAR, HARYANA - 125001
PH :9728100029.

GURGAON

65. QUTAB AUTO PVT. LTD. (3668--), KHEWAT/ KHATA NO 714/909, VILLAGE JHARSA, UNITECH CYBER PARK ROAD, SECTOR 39, GURGAON, HARYANA 122001 - 122001
PH :9811687333.

66. M R MOTORS (8946--), VIJAY VIHAR,MAIN SILOKHRA ROAD,SEC-30, GURGAON- 122002 , HARYANA , - 122001
PH :9992111244.

67. SOMESH AUTOMOBILES (455--), PLOT NO 249/2/8, BLOCK A, ROAD NO A-56, DLF PHASE 1, GURGAON 122002 - 122002
PH :9650690000.

HISSAR

68. SALASAR AUTO (4735--), OPP. VIDYUT NAGAR GATE NO. 2, DELHI ROAD, HISSAR-125001, HARYANA - 125001
PH :9355486716.

ISMAILABAD

69. VINAYAK MOTORS (9024--), OPP. MAHARAJA PALACE , AMBALA HISSAR ROAD , ISMAILABAD-136129 , HARYANA - 136129
PH :9034820190.

ISRANA

70. SHIV DARSHAN AUTOMOBILES (6051--), ISRANA PANIPAT ROAD, NR. NC COLLEGE,ISRANA-132103, DISTRICT-PANIPAT , HARYANA - 132107
PH :9911366230.

JHAJJAR

71. VASUNDHRA MOTORS (1467--), REWARI ROAD, JHAJJAR-124 103, (HARYANA), - 124103
PH :9812012180.

KURUKSHETRA

72. KARTAR MOTORS (5349--), PLOT O 65-66, SECTOR -2, HUDA INDUSTRIAL, AREA KURUKSHETRA - 136118
PH :9896245900.

MAHENDERGARH

73. SHREE SHYAM MOTORS (8960--), NEAR I.O.C PETROL PUMP, MAHENDERGARH-123029, DISTRICT-MAHENDERGARH, (HARYANA) - 123028

MANESAR

74. MAITRI SERVICE STATION (2378--), N.H.8, DELHI-JAIPUR ROAD, MANESAR (GURGAON), - 122001
PH :9818001128.

NILOKHERI

75. SAHIL MOTORS (8974--), NEW NEHSIL ROAD.NILOKHERI, DISTRICT KARNAL , NILOKHERI-132117, HARYANA - 132117
PH :9812510190.

PALWAL

76. D.K. & R.K. MOTORS (1159--), NEAR BUS STAND, , NH-2 PALWAL, PALWAL, - 121102

77. SHEELA MOTORS (5141--), OPP MUNICIPAL COUNCIL OFFICE, OLD G T ROAD, PALWAL, DISTRICT - FARIDABAD, HARYANA - 121102

PANCHKULA

78. PANCHKULA AUTO SERVICES (1949--), PLOT NO.300, PHASE-II INDUSTRIAL AREA, PANCHKULA-134 109, (HARYANA) - 134109
PH :9872441546.

PATAUDI

79. SHUBHAM AUTOMOBILES (4641--), REWARI ROAD, PATAUDI, DISTT. GURGAON, - 122413

SADHAURA

80. SHREE GANESH MOTORS (5959--), NEAR INDIAN OIL PETROL PUMP, KALA AMB ROAD,SADHAURA-133204, DISTRICT-YAMUNANAGAR, HARYANA - 133204
PH :9813376260.

SHAHABAD

81. MAHALAXMI MOTORS (354--), LADWA ROAD, SHAHABAD MARKANDA-136 135, (HARYANA), - 136135
PH :9812036433.

SIWANI

82. GANESH AUTOMOBILES (5931--), NEAR RELIANCE PETROL PUMP,HISAR ROAD,SIWANI, DISTRICT-BHIWANI, HARYANA - 127046 - 127046
PH :8607113000.

SOHNA

83. SHRI SHYAM MOTORS (8978--), OPP.RAGHUNANDAN PETROL PUMP, NEAR GD GOENKA INTERNATIONAL SCHOOL, SOHNA-122103, HARYANA - 122103
PH :9416455660.

TOSHAM

84. MOHINI AUTOMOBILES (6026--), OPP.NEW ANAJ MANDI , NEAR MINI BANK,TOSHAM-127040 , DISTRICT-BHIWANI, HARYANA - 127040

HIMACHAL PRADESH

BADDI

85. LAJ MOTORS (5541--), 436.MAUJA SURAJ.MAJRA LABANA, BADDI, DISTRICT - SOLAN, HIMACHAL PRADESH - 173205
PH :9816039189.

BANOI

86. BABA SERVICE STATION (4634--), VILL BANOI, TEH SHAHPUR P.O., BANOI, DIST KANGRA (HIMACHAL PRADESH) - 176209
PH :9418051290.

BHAMBLA

87. DHIMAN MOTORS (3837--), PLOT NO. 42,, INDUSTRIAL AREA, BHAMBLA, JAHU, DISTT MANDI - 175004
PH :9816227437.

BHUNTAR

88. HANDA MOTORS (4262--), HANDA COMPLEX, NEAR AIRPORT, BHUNTAR, KULLU (H.P) - 175125
PH :9816007003.

CHAMBA

89. AUTOZONE (5247--), PATHANKOT RAOD .PAREL , SULTANPUR - CHAMBA , DISTRICT - CHAMBA , HIMACHAL PRADESH - 176310
PH :9418214848.

GHUMARWIN

90. BHASKAR AUTO SPARE & SERVICE (5147--), VILLAGE KULARU, GHUMARWIN, DISTRICT - BILASPUR, HIMACHAL PRADESH - 174021
PH :9816090504.

JAWALAMUKHI

91. LAKSHMI AUTO SPARE & SERVICE CENTRE (4630--), NEAR GANJU BAGH, DEHRA ROAD, JWALAMUKHI, TEH. DEHRA, DIST. KANGRA (HIMACHAL PRADESH) - 176031
PH :9418091048.

KUMARHATTI

92. SOLAN AUTOMOBILES PVT. LTD. (6420--), DAGHOTA(SOLAN), P.O.KUMAR HATTI-173 229 (H.P)., , - 173229
PH :9816030330.

MANDI

93. BHAGWATI AUTOMOBILES (269--), PLOT NO. 3, INDUSTRIAL AREA PHASE 3, SAULI KHAD, MANDI, HIMACHAL PRADESH - 175001
PH :9418461897.

MARANDA

94. MODERN SERVICE CENTRE (1175--), PUSHP COMPLEX, MARANDA-176 102, (H.P.), - 176102
PH :7018243011.

NADAUN

95. CAR CARE ENGINEERS (4423--), HOSHIARPUR ROAD, MANPUL, NADAUN DISTT, HAMIRPUR, HP - 177033
PH :9857799080.

NAHAN

96. AGGARWAL MOTORS (3334--), GUNNU GHAT, NEAR TELECOM COLONY, NAHAN-173 001, - 173001
PH :9418023558.

PAONTA SAHIB

97. SUMEET MOTORS (1441--), SHAMSHERPUR, PAONTA SAHIB-173 025, (H.P.), - 173025
PH :9418018329.

PATLI KUHAL

98. JAMDAGNI MOTORS (760--), VILLAGE PATLI KUHAL, P.O.KATRAIN, DISTT.KULLU (H.P.), - 175129
PH :9816040247.

RAMPUR BUSHAHR

99. HIGHWAY SERVICE STATION (2649--), CHUHA BAG, RAMPUR BUSHAHR, (H.P.) - 172001 - 172001
PH :9805831627.

100. KRISHNA AUTOMOBILE (4438--), VILL CHUHA BAG, RAMPUR BUSHAHR-172001, , - 172001
PH :9418036091.

SHIMLA

101. GURRAJ AUTO SERVICE (757--), NEAR CPRI ROAD, BEMLOI, SHIMLA-171 001, - 171001
PH :9816233030.

102. MOTO WORLD (6433--), NAVBAHAR, SHIMLA-171 002, , - 171002
PH :9459050769.

SOLAN

103. SOLAN SERVICE CENTRE (764--), BYE PASS, NEAR PWD OFFICE, SOLAN-173 212, - 173212
PH :9816022640.

UNA (H.P)

104. RUDRA MOTORS (3925--), NEAR OLD HOSPITAL CHOWK, NH-22, UNA - 174303 (H.P.), - 174303
PH :8628803717.

105. TRINITY AUTO FAST ENGINEERS (1755--), JALGRAN TABBA, NANGAL ROAD, UNA, HIMACHAL PRADESH - 174303 - 174303
PH :9816628020.

JAMMU AND KASHMIR

BARAMULA

106. MARUTI MASTERS (4369--), KANISPORA, BARAMULA, KASHMIR, - 193101
PH :9906864748.

CHADOORA

107. VEHICLE MASTERS (4661--), MAIN ROAD, CHADOORA-190001, DIST. BUDGAM, JAMMU & KASHMIR - 190001
PH :9419441217.

JAMMU

108. KWIK FIT (2343--), AMBPHALLA, B.C. ROAD, JAMMU-180 001, - 180001
PH :9419104400.

109. MAGNA GARAGES (441--), NARWAL CHOWK, TRANSPORT NAGAR, JAMMU-180 006 - 180006
PH :9796800000.

SAMBHA

110. DHANSAR CAR CLINIC (5146--), NATIONAL HIGHWAY , SUPWAL SAMBHA , DISTRICT - JAMMU, J&K - 184120
PH :9419393949.

JHARKHAND

KHUNTI

111. MOD MOBILES (5579--), MAIN ROAD,RANCHI ROAD - KHUNTI, DISTRICT - KHUNTI, PIN - 835210, JHARKHAND - 835210
PH :9304468855.

PAKUR

112. SPEED WHEEL SERVICE CENTRE-PAKUR (4976--), MAIN ROAD, PAKUR - 816107, , - 816107
PH :9434101917.

KARNATAKA

BAGALKOT

113. NARA AUTOMOBILES (4357--), TP NO. 158 A/2, WARD NO. 10, SHABADI COMPOUND EXTN, BAGALKOT-587101 - 587101
PH :9880875595.

BANGALORE

114. ADARSHA AUTOMOBILES (4553--), 108/9, HALASAHALLI ROAD, OPP HP GAS GODOWN, NEXT TO SK FLOOR MILL, VARTHUR, BANGALORE – 560087 - 560037
PH :9880195465.

115. BENAKA MOTORS (3237--), NO.158/2 VIBHUTIPURA, VIGNAN NAGAR BEHIND B.E.M.L., NEAR RENUKA SWIMMING POOL, BANGALORE-560 017
PH :9845212416.

116. KESHKAMAL MOTORS (2075--), NO.943 21ST MAIN, BANASHANKARI 2ND STAGE, (NEAR KIMS MEDICAL COLLEGE), BANGALORE-560 070
PH :9448071067.

117. CANARA MOTORS (8987--), 9TH MAIN, NEAR PARLE G, TUMKUR ROAD, CHIKKABIDARAKALLU VILLAGE, BANGALORE-560073. - 560058
PH :9845842288.

118. NEXUS (2768--), #275/301, 80 FEET ROAD, OPP. M.S. RAMAIAH HOSPITAL (BEL ROAD), RMV 2ND STAGE, BANGALORE-560 094
PH :9844013436.

119. RAJ MOTORS (2829--), NO.10 MAGADI MAIN ROAD, OPP. UNANI MEDICINE INSTITUTE, KOTIGEPALYA, BANGALORE-560 091
PH :9663555677.

120. SMART CARS (3571--), 3RD CROSS NEAR J.B. TILES, KAGGADASA PURA MAIN ROAD, C.V. RAMAN NAGAR, BANGALORE-560 093
PH :9663324361.

121. TRINITY CAR CARE PVT. LTD (5851--), SURVEY NO 52/1,SRI GANDHADAKAVAL VILLAGE, NAGARBHAVI,BANGALORE-560091, DISTRICT-BANGALORE , KARNATAKA - 560091
PH :9880793980.

122. TRINITY MOTORS (4638--), NO. 36, 4TH STAGE, W.C. ROAD, BASAVESHWARANAGAR, BANGALORE-560079 - 560079
PH :9845539474.

CHIKBALLAPUR

123. SUKOVE ENTERPRISES (3426--), B.B. ROAD N.H.7, CHIKBALLAPUR-562 101, (KARNATAKA),
PH :9880607034.

DHARWAD

124. MYSORE GARAGE (2468--), BELGAUM ROAD, DHARWAD-580 001, (KARNATAKA),
PH :9844133273.

GADAG

125. MODERN MOTORS (8939--), HUBLI ROAD, GADAG-582 103, (KARNATAKA),
PH :9448746579.

KARKALA

126. KARKALA MOTORS (3549--), TELLAR ROAD, KARKALA-574 104, (KARNATAKA),
PH :9845356244.

KOLAR

127. SHIVA SERVICE POINT (2472--), M.B. ROAD, KOLAR-563 101, (KARNATAKA),
PH :9448228604.

KUNDAPUR

128. PRAKASH AUTO SERVICE (4522--), NH-66, NEAR K.E.B., VODERHOBLI, KUNDAPURA, KARNATAKA - 576201
PH :9341035642.

RANEBENNUR

129. KIZEN MOTORS (4568--), P.B.ROAD, RANEBENNUR, KARNATAKA - 581115 - 581115
PH :9900922022.

SAGAR (KARNATAKA)

130. MALLIKA AUTO CENTRE (2133--), NO. 459/1204, GANDHI NAGAR, BEHIND BHARAT PETROLEUM, NH 206, SAGARA - 577401, KARNATAKA
PH :9448139605.

SIRSI

131. ARUNDHATI MOTORS (1258--), HUBLI ROAD, SIRSI-581 402, (UTTAR KARNATAKA),
PH :9845098822.

KERALA

ADIMALY

132. PLATHOTTAM AUTOMOBILES (3864--), NH-49, OPPOSITE TO MINI INDUSTRIAL ESTATE, ADIMALI-685561, - 685561
PH :9447023073.

ALUVA

133. AUTO TEAM (2630--), A/189 A, PARUR JUNCTION, ALUVA, (KERALA) - 683108
PH :9947333760.

AMBALLUR

134. LAKSHMI DEVI AUTO GARAGE (4137--), AMBALLUR, P.O. PUDUKAD, TRICHUR, KERALA - 680301
PH :9847903949.

CHALAKUDY

135. STAR MARUTI GARAGE (5367--), NH47 BYE PASS, NEAR CRESCENT PUBLIC SCHOOL, .CHALAKKUDY, DISTRICT - THRISSUR - 680307
PH :9946009375.

CHANGANACHERRY

136. PALATHRA MOTORS & SERVICE CENTRE (1072--), VADAKKEKARA, VEROOR P.O., CHANGANACHERRY-686 104, - 686104
PH :9447195154.

CHENGANNUR

137. NEW TECH AUTOMOBILES (1978--), INDUSTRIAL ESTATE, MUNDANCAVU, CHENGANNUR-689 121, KERALA - 689121
PH :9388915757.

ETTUMANOOR

138. ROHIT MOTORS (4636--), THELLAKOM P.O., M.C. ROAD, ETTUMANOOR, KERALA - 686630
PH :9447079010.

KALLAMBALAM

139. PRAKASH AUTO ENGINEERS (5548--), VADASSERIKONAM P.O. KALLAMBALAM, VARKALA,KALLAMBALAM-695143, DISTRICT-TRIVANDRUM, KERALA - 695143
PH :9847159618.

KALLUMUTTY

140. MARUTI CARE (4179--), KALLUMUTTY, IRITTY P.O., KANNUR, KERALA - 670703 - 670703
PH :9946703070.

KANNUR

141. PIONEER AUTO & ENGG.WORKS (4722--), KANNOTHUMCHAL ROAD, KANNUR - 2, (KERALA), - 670005
PH :9447798255.

KATTAPPANA

142. UNITED SERVICE CENTER (4433--), EDASSERT JUNCTION, KATTAPPANA-685508, KERALA, - 685508
PH :9961432941.

KAYAMKULAM

143. PERFECT MOTORS (8995--), MARUTI SERVICE CENTRE, NH-47, CHEPPAD, KAYANKULAM-690507, DISTRICT-ALAPPUZHA (KERALA) - 690507
PH :9447048338.

KUNDARA

144. SPARK SERVICE (5772--), ELAMPALLOOR,P.O. KUNDARA-691501, DISTRICT-KOLLAM, (KERALA), - 691501
PH :9809608020.

KUTHUPARAMBA

145. KRISHNA MOTORS (3435--), KUTTIKKUNNU, NEAR 66 KV SUB STATION, KUTHUPARAMBA-670 643, KANNUR DIST. (KERALA) - 670643
PH :9497296380.

MANNAR

146. MOHANS AUTOMOBILES (5457--), MOHANS AUTOMOBILES & ENGINEERS , KUTTEMPEROOR P.O. MANNAR, DISTRICT - ALAPPUZHA , (KERALA) - 689622
PH :9447877377.

MANNUTHY

147. TOP CLEAN SERVICES (2834--), 13/450 MANNUTHI BYE PASS, P.O. OLLUKKARA, THRISSUR, (KERALA) - 680651
PH :8592947776.

MUVATTUPUZHA

148. JAWAN AUTOMOBILES (2730--), MADAVOOR POST, MUVATTUPUZHA-686 669, , - 686669
PH :8943345500.

NEYYATTINKARA

149. XANON ENGINEERS (8951--), RAVELI TOLL JUNCTION, NEYYATTINKARA, TRIVANDRUM-695121, - 695121
PH :9946357813.

PALAKKAD

150. CAR CRAFT (2139--), 5/682 (1), MANALI, PALAKAD-678 001, (KERALA) - 678001
PH :9349607619.

SASTHA MANGALAM

151. MARSHAL AUTOMOBILES (4035--), SWATHI NAGAR, TC 22/1565, PIPPINMOOD, SASTHAMANGALAM - PEROORKADA ROAD, PEROORKADA PO, THIRUVANANTHAPURAM - 695005, KERALA - 695005
PH :9447461101.

SULTAN BATHERY

152. NEW INDIAN (8970--), MYSORE ROAD, SULTAN BATHERY, WAYANAD DISTRICT, KERALA-673592 - 673592
PH :8281682822.

TRIVANDRUM

153. EMINENT MARUTI SERVICE (2360--), T.C. 610 M.C. ROAD, MANNANTHALA, TRIVANDRUM-695 015, - 695015
PH :9447713639.

VARKALA

154. S.S. MOTORS (2979--), NEAR POLICE STATION, VARKALA-695 141, TRIVANDRUM DISTT., - 695141
PH :9446104991.

VATAKARA

155. RANI CARS (8957--), BUILDING NO. 10/496A, NADAPURAM ROAD,MADAPPALLI COLLEGE POST, VATAKARA, DISTRICT KOZHIKODE, KERALA- 673102. - 673102
PH :9400513139.

MADHYA PRADESH

BARWANI

156. SPEED AUTOMOBILES (5260--), KHANDWA BARODA ROAD, NR. BALAJI TOLL KANTA,BARWANI-451552, DISTRICT-BARWANI, MADHYA PRADESH - 451552
PH :9926146073.

BHOPAL

157. SHUBHAM AUTOMOBILES (5052--), PLOT NO. 1 & 2, TIRANGA ROAD, SHAHPURA, BHOPAL, MADHYA PRADESH -462039 - 462039
PH :9425009869.

158. TAURUS AUTOMOBILES (3372--), ALAKNANDA COMPLEX, OPP.VIJAY STAMBH PRESS COMPLEX, M.P. NAGAR ZONE-I, BHOPAL (M.P.) - 462011
PH :9303131403.

BURHANPUR

159. SWADESHI MOTORS (4229--), NEAR GANPATI MANDIR, GANPATI NAKA, BURHANPUR, MADHYA PRADESH - 450331

DABRA

160. MODI MOTORS (3857--), BALLA KA DERA, JHANSI ROAD, DABRA, GWALIOR - 475110
PH :8770360194.

DAMOH

161. MARUTI PRIME (1156--), BUS STAND, STATION ROAD, DAMOH-470 661,
PH :8319706998.

DATIA

162. HIND MOTORS (4470--), NH-75, JHANSI BYPASS ROAD, NEAR S.R.I COLLEGE, KALAMPURAM TIRHA, DATIA, MADHYA PRADESH - 475661 - 475661
PH :9406969206.

DEWAS

163. AZAD MOTORS (4534--), 10, JAWAHAR NAGAR COMPLEX AB ROAD DEWAS(MP)404051 - 455001
PH :9827533591.

GWALIOR

164. CLASSIC MOTORS & SERVICE STATION (5242--), CHAUHAN PIAO.M.G. ROAD, THATIPUR .MORAR, GWALIOR , MADHYA PRADESH - 474011
PH :9329603001.

165. MARUTI ENTERPRISES (3021--), KHERAPATI ROAD, GWALIOR-474 002, (M.P), - 474002
PH :9425116466.

HARDA

166. MANOJ UDYOG & SERVICE CENTER (4145--), 87-88, INDUSTRIAL AREA, CHHIPANER ROAD, HARDA, M.P - 461331
PH :9826227245.

TIKAMGARH

167. ASHENDRA AUTOMOBILES (2636--), 350 OPP. JAWAHAR NAVODAYA VIDYALAYA, KUNDESHWAR, TIKAMGARH-472 001, MADHYA PRADESH - 472001
PH :9009129909.

VIDISHA

168. SAMAY MOTORS (5179--), NEAR SC/ST SHED , PITALMIL CHOURAHA, SAGAR ROAD NH-86, VIDISHA, MP-464002 - 464002
PH :9425392521.

WAIDHAN

169. ANANT MOTORS (5732--), NEAR ESSAR TOWNSHIP, BILAUNJI ,WAIDHAN, DISTRICT-SINGRAULI, PIN-486886, MADHYA PRADESH - 486886
PH :8319050124.

MAHARASHTRA

AHMEDNAGAR

170. AMIT SERVICE STATION (4158--), NEAR NAGAPUR HIGHWAY BRIDGE, NAGAR-MANMAD HIGHWAY, NAGAPUR DIST-AHMADNAGAR, MAHARASHTRA - 414111

BARSHI

171. OM SERVICING CENTRE (5359--), KURWEDI ROAD - BARSI, DISTRICT - SOLAPUR , PIN - 413401, (MAHARASHTRA) - 413401
PH :9850437003.

BOISAR

172. SIFAR CAR CARE (4055--), PLOT NO. 15 AT-KURGAON, P O KUNDAN, BOISAR TARAPUR ROAD, TAL PALGHAR, DISTT THANE - 401506
PH :9765509990.

GADACHIROLI

173. VENUS AUTOMOTIVE (4170--), PLOT # 2, NR GOVERNMENT ITI COLLEGE, ADJ TO CHANDRAPUR GADACHIROLI HIGHWAY, GADACHIROLI, MAHARASHTRA-442605 - 442605
PH :9689228222.

ICHALKARANJI

174. SAI AUTO LEADS (3821--), 6/1108, SANGLI VES, ICHALKARANJI - 416115, DIST. KOLHAPUR, MAHARASHTRA - 416115
PH :9822009788.

JALGAON

175. SHREE MOTORS (3040--), 362 SHIVAJI NAGAR, JALGAON-425 001, , - 425001
PH :9823150704.

KANKAVLI

176. SAPALE AUTO SERVICE PVT. LTD. (1975--), MUMBAI GOA ROAD, N.H.17, KALMATH, KANKAVLI DISTT. SINDHUDURG-416 602 - 416602
PH :9422434701.

KHAMGAON

177. JAIDEEP MOTORS (4779--), NEAR RELIANCE PETROL PUMP, NANDURA ROAD, KHAMGAON-444303, DISTRICT-BULDHANA (MAHARASHTRA) - 444303
PH :9850352826.

KOPARGAON

178. SAI MOTORS (4449--), NAGAR MANMAD HIGHWAY, NEAR HOTEL ASHOKA, KOPARGAON, DIST. AHMEDNAGAR (MAHARASHTRA) - 423601
PH :9850684384.

MUMBAI

179. ALLIED AUTO AGENCIES (2666--), 86/20 DR. AMBEDKAR ROAD, KHAR, MUMBAI-400 052, - 400052
PH :9768257450.

180. CARKRAFT AUTOMOBILES AND INFRASTRUCTURE PVT. LTD. (4654--), ABC GODOWN, MINERVA INDUSTRIAL ESTATE, OFF P.K. ROAD, NEAR SAI DHAM MANDHIR, MULUND (W), MUMBAI - 400080
PH :9820296924.

181. POWAI AUTO WORKS (1660--), OPP. PANCH KUTIR BUS STOP, 19 ADI SANKARACHARYA MARG, POWAI, MUMBAI-400 076 - 400076
PH :9820635317.

182. RAVI AUTOMOBILE SERVICES (553--), GHATKOPAR-MAHUL ROAD, TILAK NAGAR, CHAMBUR, MUMBAI-400 089, - 400089
PH :8657442190.

183. SUPER AUTO SERVICES PVT. LTD. (2430--), DESAI WADI JAYWANT SAWANT ROAD, NEAR HAPPY HOME SOCIETY, DAHISAR (W), MUMBAI-400 068 - 400068
PH :9867253000.

NAGPUR

184. BALAJI MOTORS (3078--), PLOT NO.18/27, NEAR NAKA NO.-1, KORADI ROAD, NAGPUR-20 - 440020
PH :9960634068.

NASHIK

185. RACCA SERVICES (3720--), RACCA ESTATE, OLD GANGAPUR NAKA, HANUMAN WADI LINK ROAD, PANCHVATI, NASHIK - 422003 - 422003
PH :9096846468.

PANVEL

186. GANGAL MOTORS (2934--), PLOT NO.:132,133 &117, SECTOR 1-S, ROAD NO-5, BEHIND CIDCO GODOWN, NEW PANVEL, DISTRICT - RAIGAD, (MAHARASHTRA) - 410206
PH :9320226072.

187. IDEAL AUTOMOBILES (2279--), IDEAL HOUSE,PLOT NO-83,, PANVEL INDUSTRIAL CO OP ESTATE LTD., PANVEL, DISTRICT - RAIGAD, (MAHARASHTRA) - 410206
PH :9969602650.

PASHAN

188. MARUTI CAR SANJIVANI (5278--), SURVEY NO 5/2.SUTARWADI .SUSROAD.PASHAN, DISTRICT - PUNE, PUNE - 411021, MAHARASHTRA - 411021
PH :9960733360.

PATHARDI

189. SAGAR MOTORS (5979--), MALIBABHULGAON, NAGAR ROAD PATHARDI, MAHARASHTRA 414102 - 414102
PH :9822197969.

PEN

190. NAVNATH AUTO (5677--), OPPOSITE RAMWADI,S.T. STAND, NATIONAL HIGHWAY-17,TAL PEN-402107, DISTRICT-RAIGAD, MAHARASHTRA - 402107
PH :9834279228.

PUNE

191. APPU AUTOMOBILES (5029--), SR. NO. 165, PLOT NO. 801, TALAWADE ROAD, PUNE - 412114, MAHARASHTRA. - 411062
PH :9371017595.

192. MANAS AUTOMOTIVE (5443--), SURVEY NO 9/20A , ANAND THORAT ROAD , NEAR APJ ABDUL KALAM E LEARNING SCHOOL, KARVE NAGAR, PUNE - 411052. - 411052
PH :9822043007.

193. SANTOOR CAR CARE (2053--), ASHOK PLAZA, 32/2 WADGAON SHERI NEAR WEIKFIELD, PUNE NAGAR ROAD, PUNE-411 014 - 411014

SANGAMNER

194. SAI MOTORS (2840--), NEAR GULEWADI PHATA, PUNE NASIK ROAD, SANGAMNER DIST. AHMEDNAGAR, PIN-422 608 (MHRS.) - 422608
PH :9860027513.

SANGLI

195. AWATI MOTORS (4772--), PADMAVATI COLONY, NEMINATH NAGAR VISHRAMBHAG, SANGLI-416415, MAHARASTRA - 416415
PH :9422407284.

196. BALAJI AUTO SERVICE (1564--), PLOT NO.43,GOLDEN PARK , BYPASS ROAD,SANGLI-416416 , DISTRICT-SANGLI , MAHARASHTRA - 416416
PH :9822106126.

SATANA

197. PATHAK MOTORS (5037--), YASHWANT NAGAR,TAHARABAD ROAD,, SATANA - 423301, DISTRICT - NASIK, (MAHARASTRA) - 423301
PH :9890216257.

SHAHADA

198. MATOSHREE AUTOMOBILES (2870--), NO.558 SHAHADA DHONDAICHA ROAD, TAL. SHAHADA, NANDURBAR DISTT., (MAHARASHTRA) - 425409
PH :9421726230.

SHIRDI

199. SHREE GANESH AUTO CARE (4268--), POST SAKURI, TALUKA RAHATA, AHMEDNAGAR-423107, - 423107

THANE

200. CARKRAFT SERVICES PRIVATE LIMITED (8973--), SAINATH NAGAR, GHODBUNDER ROAD, KASARVADAVALI, THANE (W) - 400615
PH :9833795855.

ULHASNAGAR

201. MODERN CAR CARE (3260--), SHED NO 1/2/3, OPPOSITE SUPPER POINT HOTEL, SECTION 17, ULHASNAGAR – 421003, MAHARASHTRA - 421003
PH :9819774588.

URAN

202. SAI AUTOMOBILES (5665--), STATE HIGHWAY NO.56,NEAR JASAI NAKA, JASAI VILLAGE,URAN-410206, DISTRICT - RAIGAD, MAHARASHTRA - 410206
PH :9821806806.

WARORA

203. ROHIT AUTOMOTIVE (5873--), NAGPUR,CHANDRAPUR ROAD,VINAYAK-, LAYOUT,TILAK WARD,WARORA-442907, DISTRICT-CHANDRAPUR, MAHARASHTRA - 442907
PH :9172060099.

ODISHA

ANGUL

204. ZEET AUTOMOBILES (1573--), NALCO NAGAR, KANDASAR, ANGUL - 759 145, ORISSA - 759145
PH :9437021285.

BALANGIR

205. ASHIRWAD AUTOMOBILE WORKS (3177--), DAMJI GARAGE, THIKADARPARA, , , BALANGIR-767 001 - 767001
PH :9437223452.

BARBIL

206. INDU MOTORS (3241--), IN FRONT OF UTKAL AUTOMOBILES, JODA-BARBIL HIGHWAY, BARBIL-758 035, (ORISSA) - 758035
PH :9437718008.

BHUBANESWAR

207. INDO JAPAN SERVICE (4936--), PLOT NO. 18, 19, 30 & 31, BHAGABANPUR INDUSTRIAL ESTATE, PO: PATRAPADA, BHUBANESHWAR-752019, ORISSA - 752019
PH :9861095444.

CUTTACK

208. AUTO MATES (426--), 3B/1325, SECTOR-11, CDA, CUTTACK, ODISHA - 753014 - 753008
PH :9437020646.

209. DURGA SERVICE CENTRE (8984--), NEAR PALAMANDAP, BADAMBADI, PO - ARUNODAY MARKET, DISTT - CUTTACK, PIN-753012 - 753012
PH :9937035762.

DHENKANAL

210. SHREE AUTO (8997--), GOUDUNIBEDIA, DHENKANAL - 759013, ODISHA - 759001
PH :9437414972.

PONDICHERRY

PUDUCHERRY

211. S D K MOTORS (471--), PLOT NO.12, 100 FEET ROAD, OZHANDAI KEERAPALAYAM MUDALIARPET, PONDICHERRY-605 004 - 605004
PH :9843045689.

PUNJAB

AMRITSAR

212. HANSON AUTOMOBILES (1722--), MAQBOOL PURA, G.T. ROAD, AMRITSAR, - 143001
PH :9815167669.

BANUR

213. AMRIK SERVICE STATION (2433--), PATIALA ROAD, BANUR, DISTT. MOHALI(PUNJAB), - 140601
PH :9815591325.

BARNALA

214. PUNJAB MOTOR GARAGE (6222--), DHANAULA ROAD, BARNALA (PUNJAB), , - 148101
PH :9317512360.

DERABASSI

215. BINDAL AUTOMOBILES (1248--), CHANDIGARH AMBALA ROAD, PARAS RAM MARKET, DERA BASSI-140 507, - 140507
PH :9914449711.

DIRBA

216. PENTAGON MECHANICAL WORKS (2564--), JIND-SANGRUR ROAD, DIRBA, DISTT. SANGRUR, (PUNJAB) - 148035
PH :9876543400.

KURALI

217. V K MOTORS (8943--), CHANDIGARH ROPAR ROAD, KURALI, DISTRICT SAS NAGAR (MOHALI), PUNJAB -140103 - 140103
PH :9814273873.

MOHALI

218. SETHI MOTORS (4742--), PLOT NO. E-159, INDUSTRIAL AREA, PHASE-7, MOHALI, PUNJAB - 160055
PH :9814307002.

MORINDA

219. SONY MOTOR PALACE (1077--), SIRHIND ROAD, MORINDA-140 101, , - 140101
PH :9815612477.

MUKERIAN

220. MARSHAL SALES CORPORATION (5251--), NEAR RADHA SOAMI SATSANG, PATHANKOT ROAD, MUKERIAN - 144211, DISTRICT HOSHIARPUR,PUNJAB - 144211
PH :8283835926.

PATIALA

221. RAJINDRA MOTORS (8924--), C-177, INDUSTRIAL FOCAL POINT, PATIALA, PUNJAB - 147003
PH :9316200335.

RAIKOT

222. RANA SUPREME MOTOR GARAGE (3732--), NEAR GURUDWARA TAHLIANA SAHIB, BARNALA BYE PASS ROAD, RAIKOT, DISTT. LUDHIANA (PUNJAB) - 141109
PH :9814265791.

RAMPURAPHUL

223. BALAJI AUTOMOBILES (4443--), OPPOSITE FCI GODOWN, RAMPURA PHUL - 151103 - 151103
PH :9417172671.

SIRHIND

224. MALHOTRA MOTORS (4657--), OPP. INCOME TAX OFFICE, SIRHIND, DISTT FATEHGARH SAHIB, PUNJAB - 140406
PH :9815844008.

SULTANPUR LODHI

225. HANDA MOTORS (2776--), TALWANDI ROAD, SULTANPUR LODHI, DISTT. KAPURTHALA, (PUNJAB) - 144626
PH :9815623392.

RAJASTHAN

ABU ROAD

226. UNIQUE MOTORS (4923--), MOUNT ROAD, AKRABHATTA, ABU ROAD-307 510, (RAJASTHAN) - 307510
PH :9929177781.

BEHROR

227. K.L. INTERNATIONAL AUTOMOBILES (1763--), DELHI JAIPUR HIGHWAY, VILLAGE DHAMI, P.O. KANKARDOPA, TEHSIL BEHROR DIST. ALWAR (RAJASTHAN) - 301701

BHARATPUR

228. CLASSIC MOTORS (2348--), DEEG ROAD, KUMHER GATE, BHARATPUR-321 001, (RAJASTHAN) - 321001
PH :9414026545.

BHIWADI

229. WHEEL-O-CITY (4246--), E-7D (A) PHASE-1, NEAR RIICO CHOWK, BHIWADI, RAJASTHAN - 301019

CHOMU

230. SHREE LAXMI MOTORS (3072--), MORIJA ROAD, CHOMU, JAIPUR-303702, (RAJASTHAN) - 303702
PH :9828160281.

DHAULPUR

231. NARAYAN MOTORS (3345--), G.T. ROAD, DHOLPUR, (RAJASTHAN), - 328001
PH :9116013413.

DIDWANA

232. SANTOSH AUTOMOBILES (5450--), SANTOSH ATUOMOBILES ,KUCHAMAN ROAD , DIDWANA , DISTRICT - NAGAUR , (RAJASTHAN) - 341303
PH :9828833363.

JAIPUR

233. A-1 MOTORS (4856--), D-28 MALVIYA NAGAR., INDUSTRIAL AREA JAIPUR., DISTRICT - JAIPUR , RAJASTHAN - 302017
PH :9414047628.

234. AUTONITY JAIPUR (4852--), GOPALPURA BYPASS, DELHI KISHANGARH, HIGHWAY JAIPUR, DISTRICT - JAIPUR - 302019, RAJASTHAN - 302019
PH :9784377503.

235. JAI SHRI RAM AUTO SERVICE CENTRE (1140--), OPP. SHYAM NAGAR TURN, MAIN AJMER ROAD, SODALA JAIPUR, RAJASTHAN - 302019

236. TOSHNIWAL AUTOMOBILES (3475--), 131 SHRI GOPAL NGAR, GOPALPURA BYEPASS, JAIPUR, (RAJASTHAN) - 302015
PH :9887553836.

KUCHAMAN

237. DALUKA AUTO SALES (4565--), NEARBY SHARDA PALACE HOTEL,, KUCHAMAN BYE PASS,, KUCHAMAN CITY, 341508, - 341508
PH :9414433240.

MAKRANA

238. GEHLOT MOTORS (454--), OPPOSITE TO G.S.S, MANGLANA ROAD, MAKRANA, RAJASTHAN - 341505
PH :9829024687.

MERTA

239. DELUX CAR SERVICE CENTRE (3856--), KUCHERY ROAD, MERTA CITY, DISTT. NAGAUR, - 341510
PH :9414004543.

NEWAI

240. HEENA MOTORS (5568--), NEWAI BYEPASS ,NEAR JHILAY MOAD, NEWAI, DISTRICT - TONK, RAJASTHAN - 304021
PH :9414228066.

PILANI

241. MARUTI CARE CENTRE (3073--), CHIRAWA ROAD, DHANI POPSINGH, PILANI- 333031, RAJASTHAN - 333031

SUJANGARH

242. SHRI CHARBHUJA MARUTI (4924--), LANDU ROAD, SUJANGARH, DISTRICT-CHURU, RAJASTHAN - 331507
PH :9828118827.

SURATGARH

243. ROHIN SERVICE STATION (2646--), N.H.15 BIKANER ROAD, OPP. G.S.S. POWER HOUSE, SURATGARH-335 804, (RAJASTHAN) - 335804

TAMIL NADU

ARAVAKURICHI

244. GOWRI MARUTI (5570--), OPPOSITE IOCL PETROL PUMP,NH-7, ARAVAKURICHI, DISTRICT - KARUR, TAMILNADU - 639201
PH :9994818043.

CHENNAI

245. MARUTI NEEDS (2531--), NO.2 PARK ROAD, PADI, CHENNAI-600 050, - 600050
PH :9940099500.

246. P.A. SERVICE STATION (2346--), NO. 1 GOVINDARAJ ALUMEL AMMAL NAGAR, NEAR 100 FEET ROAD, AGRAHARAM, KORATTUR, CHENNAI-600 076 - 600076
PH :9840378025.

247. SWAMY AUTOMOBILES (456--), NO. 5, TANK BUND ROAD, NUNGAMBAKKAM, CHENNAI, TAMIL NADU - 600034 - 600008
PH :9840891916.

248. UNIQUE CAR CARE (5868--), NO.54, FIRST STREET, MANIKANDAPURAM, MTH HIGH ROAD, THIRUMULLAIVOYAL, CHENNAI, TAMILNADU - 600062 - 600062

COIMBATORE

249. SOUTH INDIA MOTORS (MARUTI) (4752--), 9A/3 AVINASHI ROAD, NEAR KMCH POLICE CHECK POST, CIVIL AERODROME POST, SITRA, COIMBATORE-641014 (TAMIL NADU) - 641014
PH :9843027601.

DINDIGUL

250. MAGNUM MOTORS (1241--), MEENAKSHI NAICKAN PATTY, NH-83 BYE PASS ROAD, DINDIGUL - 624002, TAMIL NADU - 624002
PH :9842231340.

GADALUR

251. GREENWAY MARUTI SERVICE CENTER (5471--), KALAMPUZHA,D.O. NO 12/59-3, GUDALUR, DISTRICT - NILGIRLS, TAMILNADU - 643212
PH :9443603815.

GOBICHETTIPALAYAM

252. HI-TEC AUTO GARAGE (2426--), 426,ASIRIYAR NAGAR, KULLAMPALAYAM POST , ERODE MAIN ROAD, GOBICHETTYPALAYAM-638 476, - 638476
PH :9842447725.

HOSUR

253. BALAJI MOTORS (5136--), PLOT NO. 11 & 18, MARUTHI NAGAR, KRISHNAGIRI MAIN ROAD, HOSUR, TAMILNADU - 635109 - 635109
PH :9842755402.

KARAIKUDI

254. SURABI MOTORS (2340--), NO.11 TRICHY MAIN ROAD, (NEAR RAILWAY CROSS), SRIRAM NAGAR, KOTAIYUR, KARAIKUDI-630 001 - 630106
PH :9443351484.

KARUR

255. SRI SAKTHI AUTO CARE (2532--), NO. 3/244, BHARATHIYAR STREET, COVAI ROAD, VADIVEL NAGAR, L.N.S. POST, KARUR - 639002, TAMILNADU - 638009
PH :9842426585.

MADURANTHAKAM

256. MARUTHI MOTORS (6036--), NO.33,G.S.T. ROAD,KARUNGUZHI, MADURANTHAKAM-603303, DISTRICT-KANCHIPURAM, TAMILNADU - 603303
PH :9443354073.

NAMAKKAL

257. ARUNA MOTORS (1461--), MARUTI SERVICE CENTRE, OPP. N.S.R. BUILDING, SALEM MAIN ROAD, NAMAKKAL-637 001 - 637001
PH :9842775761.

PALLADAM

258. CHENDU MOTORS (4333--), KALIVELAMPATTI PIRIVU, TRICHY ROAD, PALLADAM-641662, COIMBATORE DIST - 641662
PH :9842225058.

PERUNDURAI

259. PRIYAM AUTOMOBILES (3036--), 28/4, JJ NAGAR, KOVAI MAIN ROAD, PERUNDURAI, ERODE DISTRICT, TAMIL NADU - 638052 - 638052

POLACHI

260. J D & COMPANY (6055--), 160 COIMBATORE ROAD, POLLACHI - 642002, TAMIL NADU - 642002
PH :9443565785.

SANKAGIRI

261. TECH ZONE AUTO SERVICE (2640--), 10/78 BHAVANI MAIN ROAD, (NEAR ERODE PIRIVU), SANKAGIRI SALEM DISTT., PIN-637 303 - 637303

THENI

262. SATHURAGIRI MOTOR WORKS (1650--), DOOR NO. 21/5, RAVENTHIRA OIL MILL COMPOUND, CUMBUM ROAD, THENI - 625531, TAMIL NADU - 625531
PH :9047033678.

TELANGANA

KHAMMAM

263. EXCEL AUTO CARE (1043--), RAPARTHI NAGAR, BYPASS ROAD, KHAMMAM - 507001, , - 507001
PH :9848156363.

UTTAR PRADESH

ALIGARH

264. KAPIL AUTOMOBILES (1344--), OLD KHURJA BUS STAND, G.T.ROAD, ALIGARH(U.P.), - 202002
PH :9837007636.

265. KAR SCAN CENTRE (449--), RAMGHAT ROAD, KWARSI, ALIGARH-202 002, - 202002
PH :8937000111.

ALLAHABAD

266. KAY CEE AUTOMOBILES (2155--), 72/60 L.B. SHASTRI MARG, ALLAHABAD, , - 211001
PH :9415317225.

BABUGARH

267. GURUNANAK AUTOMOBILES (5977--), NH- 9, VILL SIMROLI , BABUGARH CANTT. , DISTRICT-HAPUR, UTTAR PRADESH - 245102

BAGHPAT

268. KAUSHIK MOTORS (4473--), PLOT NO 525, DELHI SAHARANPUR ROAD,PALI, BAGHPAT, UTTAR PRADESH 250609 - 250609
PH :9837800582.

BALRAMPUR

269. D M AUTOMOBILES (3933--), NEAR S.P.AWAS, GONDA ROAD, BAHADURAPUR, DISTT: BALRAMPUR, UTTAR PRADESH - 271201 - 271201
PH :9415071840.

BARAUT

270. SIGNET AUTOMOBILES (4441--), NEAR INDUSTRIAL POLICE CHOWKI, DELHI ROAD, BARAUT-250611, DISTT BAGHPAT (U.P) - 250611
PH :8218779429.

BIJNOR

271. SARDAR MOTORS (4671--), DELHI HIGHWAY ROAD , 4TH KM MILE STONE , BIJNOR - 246701, UTTAR PRADESH - 246701
PH :9837265076.

BULANDSHAHR

272. DELHI AUTO ENGRS (1351--), PLOT NO-106, NEAR TAFE TRACTOR AGENCY, NEAR CHANDPUR VILLAGE, DELHI ALIGARH BYPASS ROAD, BULANDSHAHR (UP) 203001. - 203001

CHANDPUR

273. BHARTI AUTOMOBILES (1777--), DHANORA ROAD, CHANDPUR, DISTT. BIJNOR, (U.P.) - 246725
PH :9837380551.

DADRI

274. NATIONAL MOTOR AGENCY (5143--), NOIDA ROAD , DADRI -203207, DISTRICT - GAUTAMBUDH NAGAR , UTTAR PRADESH - 203207

DEORIA

275. CLASSIC MOTORS (2971--), D-13/14 INDUSTRIAL ESTATE, OPPOSITE RTO OFFICE, GORAKHPUR ROAD, DEORIA-274 001 (U.P.) - 274001
PH :9415313939.

DHAMPUR

276. AUTAR AUTOMOBILES (4846--), NOORPUR ROAD, DHAMPUR-246761, DISTRICT-BIJNOR, UTTAR PRADESH - 246761
PH :7017211986.

FARUKHABAD

277. APOORVA MOTORS (4675--), SATANPUR MANDI ROAD, FARRUKHABAD, DISTRICT FARRUKHABAD, UTTAR PRADESH - 209625
PH :9044498958.

FIROZABAD

278. AMAN MOTORS (4366--), USAYANI CHAURAHA, RAJA KA TAAL, BYE PASS ROAD, FEROZABAD, UTTAR PRADESH - 283103
PH :9837500220.

279. GOVIND AUTOMOBILES (1739--), NH-2, INFRONT OF SUB POWER STATION, MODHA, ASFABAD CHAURAHA, FIROZABAD, UTTAR PRADESH, 283203 - 283203
PH :9837169332.

GHAZIABAD

280. KRISHNA AUTOMOBILES (5356--), 101.LAL KUAN .SHIV MANDIR , BULANDSHAHAR ROAD , DISTRICT - GHAZIABAD, UTTAR PRADESH - 201009

281. S P MOTORS (4973--), HAPUR BYPASS ROAD, MEHRAULI, GHAZIABAD, - 201001

GONDA

282. AMAN MOTORS (3858--), PORTER GANJ, LUCKNOW ROAD, GONDA, UTTAR PRADESH - 271001
PH :9415120101.

GREATER NOIDA

283. KUMAR MOTORS (8926--), M-8, SITE-5, UPSIDC, KASNA INDUSTRIAL AREA, GREATER NOIDA, DISTRICT-GOUTAM BUDH NAGAR, UTTAR PRADESH - 201312

HAPUR

284. SRASTHI MOTORS (3076--), NEAR HDFC BANK, DELHI ROAD, HAPUR, (U.P.) -245 101 - 245101

HARDOI

285. TAYAL AUTOMOTIVES (4265--), SOHRA KOTHI, BAWAN CHUNGI, HARDOI-241001, - 241001
PH :9415149951.

HATHRAS

286. RADHEY RADHEY AUTOMOBILES (4344--), NEAR BUS STAND, AGRA ROAD, HATHRAS-204101, - 204101
PH :9897069159.

KANNAUJ

287. SARALA AUTO CARE (5854--), G.T. ROAD.KANNAUJ, DISTRICT-KANNAUJ, UTTAR PRADESH, - 209725
PH :9918692324.

KHALILABAD

288. RATAN MOTORS (5645--), NEAR VAISHNO MATA MANDIR, CHOTI SARAULI, NH- 27, KHALILABAD, UTTAR PRADESH - 272175
PH :9621294899.

KHATAULI

289. EAGLE MOTORS (5142--), OPPOSITE EW ROADWAYS , G.T. ROAD. NH -58.KHATAULI, DISTRICT - MUZAFFARNAGAR, UTTAR PRADESH - 251201
PH :9997039786.

KHEKRA

290. KAILASH MOTORS (5767--), OPP TEHSIL ,DELHI BAGHPAT ROAD, KHEKRA-201101, DISTRICT-BAGHPAT, UTTAR PRADESH - 250101
PH :9760027001.

KOSIKALAN

291. ADITYA MOTORS (1940--), IOC PUMP, NATIONAL HIGHWAY, KOSIKALAN, (U.P.) - 281403
PH :9837050778.

LAMBHUA BAZAR

292. VIKRAM MOTORS (3729--), LAMBHUA BAZAR, SULTANPUR (DIST.), UTTAR PRADESH-222 302, - 222302
PH :9450215996.

LONI

293. SAMBHAV AUTOMOBILES (5168--), 31.RURAL INDUSTRIAL ESTATE , ARYA NAGAR INDUSTRIAL AREA, MAIN DELHI SHAHRANPUR HIGHWAY, UTTAR PRADESH - 201102

LUCKNOW

294. B.K. MOTORS (2537--), KALYANPUR, RING ROAD, OPP. CARRIER CONVENT BOARD, LUCKNOW-226 015 - 226015
PH :9335908130.

295. V.S. MOTORS (4745--), RAMADHIN SINGH INTER COLLEGE CAMPUS, BABU GANJ, LUCKNOW-226007, UTTAR PRADESH - 226020
PH :9984749000.

MATHURA

296. SHREE GOPAL AUTOMOBILES (5664--), DELHI BYE PASS ROAD,NEAR GOKUL RESTAURANT, MATHURA - 281001, DISTRICT - MATHURA, UTTAR PRADESH - 281001
PH :9412726760.

MEERUT

297. KRISHNA AUTOMOBILES (5573--), PLOT NO D-10,SHRADHA PURI,, KANKARKHERA - MEERUT, DISTRICT - MEERUT, UTTAR PRADESH - 250001
PH :9927241738.

MIRZAPUR

298. PRABHAT MOTORS (4131--), NH-7 REWA ROAD, CHANDAIPUR LAKHAMPUR, MIRZAPUR, U P - 231309
PH :9838940382.

NAJIBABAD

299. SETHI MOTORS (4557--), C/O SETHI BOARD INDUSTRIES LIMITED, OPP. HINDUSTAN COCO-COLA BOTTLING PLANT, NAGINA ROAD, NAJIBABAD-246763, DISTT. BIJNOR (UTTAR PRADESH) - 246732
PH :9837590800.

NOIDA

300. RAHUL MOTORS (4662--), A-59 SECTOR-80, PHASE-II, NOIDA-201303, UTTAR PRADESH - 201305
301. SKUNIVERSE AUTOMOBILE PRIVATE LIMITED (8922--), C-2 SECTOR 63, NOIDA - 201301, - 201301

OBRA

302. APPRECIATE SERVICES (4678--), BILLI RAILWAY STATION ROAD, OBRA, SONEBHADRA, UTTAR PRADESH - 231219 - 231219
PH :8765833557.

PILKHUWA

303. SHREE BANKEY BIHARI MOTORS (6025--), NH-24,DELHI-GARH ROAD,PILKHUWA-245307, DISTRICT-GHAZIABAD, UTTAR PRADESH, - 245304
PH :9045548101.

PRATAPGARH (U.P)

304. SHREE MOTORS (4146--), 10, CHIBILA RANJEETPUR, PRAYAGRAJ AYODHYA HIGHWAY, NH-330, PRATAPGARH, UTTAR PRADESH, PIN-230001 - 230001
PH :9415229257.

RATH

305. MARUTI POINT (4228--), ROOP NAGAR, BUDHOLIYANA, NEAR BUS STAND, ORAI ROAD, RATH, DIST. HAMIRPUR (U.P) - 210431
PH :9415331735.

RENUKUT

306. AMBIKA MOTORS (1050--), PATEL NAGAR, MURDHAWA, RENUKUT-231 217, SONBHADRA (U.P.) - 231217
PH :9415251724.

SADABAD

307. ASHU SERVICE CENTRE (8972--), AGRA BYE PASS R0AD, SADABAD-281306, DISTRICT-HATHRAS, UTTAR PRADESH - 281306
PH :9058832658.

SAHIBABAD

308. MOTOR MAGIC AUTO ZONE (4462--), 4/29-A SITE-IV, INDUSTRIAL AREA, SAHIBABAD, DISTT. GHAZIABAD - 201005
309. PANDIT AUTOMOBILES (4647--), 3/1/1, SITE-IV, INDUSTRIAL AREA, SAHIBABAD, OPP. KAUSHAMBI, GHAZIABAD (UTTAR PRADESH - 201010

SHAHJAHANPUR

310. SUPER AUTO (3135--), OLD DIST. HOSPITAL ROAD, SHAHJAHANPUR (U.P.), PIN-242 001, - 242001
PH :9415035644.

SIKANDRABAD

311. NALIN AUTO (8921--), G.T. ROAD, SIKANDRABAD, DISTT. BULANDSHAHAR, (U.P.) - 203205

VARANASI

312. MISHRA ENGINEERS (4957--), S-4/68, NAI BASTI, PAHARIA, VARANASI-221002, UTTAR PRADESH - 221002
PH :9415301483.

UTTARAKHAND

DEHRADUN

313. HANS LAKHERA MOTORS (5032--), JOGI WALA RING ROAD, NATHAPUR APPARTMNT,, NAR NEHRU GRAM POST OFFC, MASSOORI BYEPASS, DEHRADUN - 248001
PH :9897456677.

HALDWANI

314. HARYAL SERVICE CENTRE (5340--), BAREILY ROAD.GUAJALI - TALLI, HALDWANI, DISTRICT - NAINITAL, UTTARAKHAND - 263139
PH :9997200227.
315. ANJINI SERVICE CENTRE (8980--), NEAR BLOCK OFFICE,KALADHUNGI ROAD, LOHRIASAL MALLA, CITY - HALDWANI, UTTARAKHAND - 263139. - 263139
PH :9837098699.

KASHIPUR

316. OM MOTORS (4329--), OPPOSITE SWAGAT MANDAP, BAZPUR ROAD, KASHIPUR DIST., U.S. NAGAR (UTTRAKHAND) - 244713
PH :9927500007.

KICHHA

317. SHRI SHYAMJI AUTO SERVICE CENTER (5648--), BAREILY ROAD,KICHHA, PIN-263148, DISTRICT-UDHAM SINGH NAGAR, UTTRAKHAND - 263148
PH :9837033377.

RISHIKESH

318. GARHWAL GASOLINE STATION (3639--), , H.P. PETROL PUMP, LAXMAN JHULA ROAD, RISHIKESH-249 201 - 249137
PH :9837377767.

ROORKEE

319. DUM DUM ENGG. WORKS (1343--), GROUND FLOOR, A TO Z TOWER, NEAR SOLANI BRIDGE, HARIDWAR ROAD, ROORKEE, - 247664
PH :8449155002.

RUDRAPRAYAG

320. RAJESHWARI AUTOMOBILES (5669--), BADRINATH ROAD,GHOLTIR, RUDRAPRAYAG, DISTRICT - RUDRAPRAYAG, UTTRAKHAND - 246171
PH :9997217788.

RUDRAPUR

321. CORUS MOTORS (5059--), D1 D2.20/1.NAINITAL ROAD, DISTRICT - U.S. NAGAR , UTTARAKHAND, - 263153
PH :9927500007.

SIMLI

322. PINDER AUTOMOBILES (5527--), PLOT # C6-C9, INDUSTRIAL AREA , NEAR KARNAPRAYAG - SIMLI, UTTRAKHAND - 246449
PH :9627687196.

SITARGANJ

323. SHRI RAM MOTORS (5833--), AGARWAL BHAWAN,BYE PASS ROAD, SITARGANJ-242605, DISTRICT-UDHAM SINGH NAGAR, UTTRAKHAND - 262405
PH :8859485786.

VIKASNAGAR

324. SHREE RAM AUTOMOBILES (5066--), NEAR TEHSIL, CHAKROTA ROAD, VIKAS NAGAR-DEHRADUN, UTTRAKHAND - 248198
PH :9897731200.
325. SOUMYA MOTORS (4272--), CHAKRATA ROAD, BEHIND STATE BANK OF INDIA, VIKASNAGAR, DISTT. DEHRADUN (U.A) - 248198
PH :9412382490.

UTTRAKHAND

RAMNAGAR

326. MAHI AUTOMOBILES (5532--), SHANKARPUR RAMNAGAR, DISTRICT - NAINITAL, UTTRAKHAND, - 244715
PH :9837920845.

WEST BENGAL

ASANSOL

327. WEST END MOTORS (1665--), KALYANPUR SATELITE TOWNSHIP PROJECT, KANYAPUR LINK ROAD, PALASHDIAH MORE, PO-KANYAPUR, PIN-713341, ASANSOL, WESTBENGAL - 713341
PH :8798107541.

BALURGHAT

328. GHOSH AUTOMOBILES (2644--), NARAYANPUR, BALURGHAT, DAKSHIN DINAJPUR-733 101, - 733101
PH :9434963493.

BANDEL

329. CAR HOSPITAL (3675--), 2 NO. NETAJI PARK, G.T. ROAD, (OPP. MILITARY COLONY), BANDEL (WEST BENGAL) - 712102
PH :9038021085.

BIRPARA

330. PARTAP ENGINEERING WORKS (8942--), VILLAGE DEMDIMA, PO-BIRPARA, DISTRICT ALIPURDUAR, WEST BENGAL, PIN -735204 - 735204
PH :9832429319.

COOCH BEHAR

331. PROVA AUTOMOBILES (8936--), NH-17 (FORMERLY NH-31), CHAKCHAKA CHECK POST, P.O. - NILKUTHI BABURHAT, DIST. - COOCH BEHAR, PIN-736156, WEST BENGAL - 736101
PH :9434174309.

DURGAPUR

332. THE QUICKEST (2879--), BANS KOPA, (NEAR PARADISE INN), G.T. ROAD, DURGAPUR-713 212 - 713212
PH :9832165126.

FARAKKA

333. SPEED WHEEL SERVICE CENTRE (1056--), TTS HCC COLONY, FARAKKA, P.O. NABARUN, DISTT. MURSHIDABAD (W.B.) - 742236
PH :9434101917.

HALDIA

334. S.D. REPAIRING CENTRE (2168--), I.O.C. GATE NO.1, P.O. HALDIA OIL REFINERY, HALDIA-721 606, DISTT. MIDNAPORE (W.B.) - 721606
PH :9434021405.

JAIGAON

335. SHAKTI TRADING CO. (770--), M.G. ROAD, JAIGAON-736 182, , - 736182
PH :7760808990.

JALPAIGURI

336. S.S. AUTOMOBILES (3664--), ASSAM MORE, JALPAIGURI, WEST BENGAL-735 101, - 735101
PH :9434340252.

337. AUTOSTEL (646--), SAKOAJHORA, P.O. GAIRKATA-735 212, DIST.JALPAIGURI, (W.B.) - 735212
PH :9934111868.

KALYANI

338. GOPAL AUTO SERVICE CENTRE (3373--), B.K. EXPRESSWAY, BUDHHA PARK, KALYANI-741 235, NADIA (WEST BENGAL) - 741235
PH :9831319161.

KOLKATA

339. MARUTI LINK (1633--), CK-12 SECTOR 2, SALT LAKE, CALCUTTA-700 091, - 700091
PH :9831180421.
340. NORTH POINT MOTORS PVT. LTD. (344--), DUTTO BAGAN - 3D/1 BUS TERMINUS, 64/2B BELGACHIA ROAD, CALCUTTA-700 037, - 700037
PH :9830220069.
341. ULTRA CRAFT (4643--), 103/1B, RAJA DINENDRA STREET, KOLKATA-700006, WEST BENGAL - 700006
PH :9831313321.
342. ZENITH AUTO (5529--), BHOLA NATH SARANI,CHINAR PARK, RAJARHAT , KOLKATA-700157, DISTRICT - KOLKATA, WEST BENGAL - 700157
PH :9830643781.
343. DIAL AUTOMOBILES PVT.LTD. (643--), 162A, PEARY MOHAN ROY ROAD, P.S.: CHETLA, KOLKATA - 700027 - 700027
PH :9830552191.

KRISHNANAGAR

344. HIGHWAY SERVICE CENTRE (4455--), ASHA DEEP, N,H-34, KRISHNANAGAR, NADIA-741101, WEST BENGAL - 741101
PH :9434165494.

MADHYAMGRAM

345. J G BEHAL AUTO (4653--), DOLTALA, GANGANAGAR, MADHYAMGRAM, KOLKATA-700129 (WEST BENGAL) - 700129
PH :9831094430.

NARENDRAPUR

346. A.M. AUTOMOBILES (3175--), KAMALGAZI, NARENDURPUR, KOLKATA-700 103, (WEST BENGAL) - 700103
PH :8335860051.

PURULIA

347. BANERJEE AUTO SERVICE (640--), ANABILA VILLA, RANCHI ROAD, PURULIA.(W.B), - 723101
PH :9434656942.

RAGHUNATHGANJ

348. AUTO WHEEL (4427--), NH 34, UMARPUR, PO GHORSALA, DO MURSHIDABAD, WEST BENGAL, PIN 742235 - 742235
PH :9434101917.

SILIGURI

349. MUM AUTO WORKS (4835--), NEAR DELHI PUBLIC SCHOOL, PANCHANAI (DAGAPUR), SILIGURI, WEST BENGAL-734003 - 734003
PH :9832068537.
350. BHAWANI MOTOR GARAGE (4844--), BIDYASAGAR PALLY, NEAR RISHI BHAWAN, BURDWAN ROAD, SILIGURI-734405, WEST BENGAL - 734405
PH :9641162127.

SODEPUR

351. CAR CARE (8986--), B.T. ROAD, SODEPUR, P.O.: SUKCHAR, 24 PARGANAS (NORTH) - 700115
PH :9674907411.

SRIRAMPUR

352. MARUTI AUTO CENTRE (2167--), 85/18 G.T. ROAD (WEST), PO : MULLIKPARA, SRIRAMPUR, HOOGLY-712 203 (W.B.) - 712203
PH :8777417901.

DELHI

DELHI

1. MSM (0883-08-01), F-39,OKHLA INDUSTRIAL AREA,PHASE-II,NEW DELHI - 110020

TAMIL NADU

CHENNAI

2. MSM (1485-14-01), # 9, (SP),THIRU-VI-KA INDUSTRIAL ESTATE, GUINDY, CHENNAI - 600032

ARUNACHAL PRADESH

ITANAGAR

1. HIBRO AUTOMOBILES (7581-75-01), D-SECTOR, DISTT: PAPUMPARE, ITANAGAR - 791111

ASSAM

BARPETA

2. ROY AUTO ENGINEERING WORKS (7Z81-7Z-01), POST OFFICE, BARPETA ROAD, MAIN ROAD , WARD NO.-4, ASSAM - 781315

DULIAJAN

3. B.S. MOTORS (X881-X8-01), NO. 01, BORPOTHAR TINALI, DULIAJAN. - 786602

BIHAR

PATNA

4. CITY AUTO SERVICES (1582-15-01), 9/1, PATLIPUTRA INDUSTRIAL ESTATE, PATLIPUTRA , PATNA - 800013

DELHI

DELHI

5. GALAXY AUTOMOBILES (0881-08-01), 8 INDUSTRIAL AREA,TILAK NAGAR,NEW DELHI, - 110018
6. A M AUTOMOBILES (A UNIT OF BLUE BIRD ENTERPRISES) (0891-08-01), 189-91, ,LAWRANCE ROAD,,DELHI - 110035

HARYANA

BALLABHGARH

7. ROYAL MOTORS (9R82-9R-01), 21/5, G.T. ROAD, BALLABHGARD, DISTT-FARIDABAD - 121004

MURTHAL

8. MURTHAL AUTO PVT. LTD. (BV81-BV-01), 44 HSIIDC, MURTHAL - 131027

PANCHKULA

9. CARE TAKER (K381-K3-01), PLOT NO. 36, INDUSTRIAL AREA, PHASE-2, PANCHKULA - 134113

PANIPAT

10. VIJAY MOTORS (D381-D3-01), PLOT# 136, INDUSTRIAL AREA, PHASE-1 - 132103

SAHA

11. PUNJAB MOTOR & ENGG WORKS (1881-18-01), NH-73, SHAHZADPUR ROAD, SAHA, DISTT.- AMBALA - 133104

YAMUNANAGAR

12. HIRA MOTOR GARAGE (D281-D2-01), PLOT NO 46, SHIVAJI PARK, OPPOSITE MADHU PALACE, YAMUNANAGAR, HARYANA - 135001

HIMACHAL PRADESH

JASSUR

13. CLASSIC MOTOR GARAGE (8H81-8H-01), TEHSEEL NOOPUR, KANGRA, JASSUR, HIMACHAL PRADESH - 176201

JAMMU AND KASHMIR

SRINAGAR

14. RAHIM MOTORS (1281-12-01), SIDGO INDUSTRIAL AREA, RANGRETH, SRINAGAR - 241384

JHARKHAND

RANCHI

15. PODDAR CAR WORLD PVT LTD (5181-51-01), 47, 48 , KOKAR INDUSTRIAL AREA, RANCHI. - 834001

KERALA

PATHANAMTHITTA

16. AGT MOTORS (W881-W8-01), AGT TOWERS, PUTHENPEEDI, OMALLUR, PATHANAMTHITTA - 689640

MADHYA PRADESH

NEEMUCH

17. AUTO SCAN (3T81-3T-01), MHOW ROAD,NEEMUCH,MADHYAPRADESH, - 454775

MAHARASHTRA

PUNE

18. MARUTI CARE POINT (1983-19-01), 17/1, RAHATANI, AUNDH-CHINCHWAD ROAD. OPP PCMC 'D' PRABHAG KARYALAY, NEXT TO HP SUBHIKA PETROL PUMP, RAHATNI, PUNE, MAHARASHTRA - 411017

THANE

19. THANAWALA MOTOR AGENCY (P) LTD (3981-39-01), B-31, OPPOSITE ITI,WAGLE ESTATE MAIN ROAD,WAGLE ESTATE,THANE - 400007

ODISHA

KEONJHAR

20. KUMAR AUTOMOBILES (7U81-7U-01), DHRUPADA, KEONJHAR, ORISSA - 758001

PUNJAB

BATALA

21. CITI AUTOMOBILES (V581-V5-01), NEAR GURUDWARA ACHAL SAHIB, PATHANKOT JALANDHAR ROAD, BATALA, - 143505

MOGA

22. SM AUTO CARE CENTRE (H681-H6-01), OOP. ITI , G.T. ROAD, MOGA - 142001

RAJASTHAN

JAIPUR

23. KATARIA AUTOZONE PVT.LTD (1181-11-01), 1-A ; NARAYANPURI,KATARIA KRISHI FARM,SIRSI ROAD,JAIPUR - 302034

TELANGANA

HYDERABAD

24. RETOUCH (1082-10-01), H.NO. 3-67/A, B, C, D,NEW NAGOLE COLONY,NAGOLE VILLAGE, HYDERABAD,NAGOLE, HYDERABAD - 500068

UTTAR PRADESH

ALIGARH

25. VINEET MOTORS (B681-B6-02), PLOT NO.D-138 &139, SECTOR-1, TALA NAGARI, RAMGHAT ROAD, ALIGARH - 202001

GHAZIABAD

26. KAP AUTOMOBILES PVT. LTD. (5981-59-01), D-BLOCK SHASHTRI NAGAR,HAPUR ROAD,GHAZIABAD
27. CHIRAG AUTOMOBILES (5983-59-01), PLOT NO. B1, SECTOR-B3, TRONICA CITY, GHAZIABAD - 201102

LUCKNOW

28. K M AUTOCRAFT (1381-13-01), 76/3, BARAURA, HUSSAIN BARI, HARDOI ROAD, LUCKNOW - 226003

MEERUT

29. UNIQUE CAR SCANNERS (4882-48-01), PLOT NO:514/4, SURAJ KUND ROAD, MEERUT, - 250001

NOIDA

30. MOTORCRAFT INDIA PVT LTD (A181-A1-01), F-8 & 9,SECTOR-8,NOIDA
31. MOTORCRAFT INDIA PVT LTD (A181-A1-02), C-125,SECTOR-63,NOIDA,
32. JKM MOTORS (A184-A1-01), A-25,SECTOR 9,DISTT. GAUTAM BUDH NAGAR,NOIDA - 201301
33. FAST TRACK AUTOCARE(INDIA) PVT. LTD. (A185-A1-01), A-13, SECTOR 63, NOIDA, G.B. NAGAR - 201301

SAHIBABAD

34. FAST TRACK SERVICES (M981-M9-01), PLOT NO.40/1B/2, 3 & 4, SITE 4, INDUSTRIAL AREA, SAHIBABAD, DISTT. GHAZIABAD (U.P.). - 201010

UNNAO

35. VISHAL WHEELERS PVT. LTD. (1382-KL-01), PLOT NO. 1164, KANPUR-LUCKNOW BYE PASS, UNNAO, UTTAR PRADESH, - 209801

VARANASI

36. PRATAP ENGINEERS (8481-84-01), S 2, 653/A-2, CLUB ROAD, VARANASI - 221002

WEST BENGAL

KOLKATA

37. MANOCO SALES (P) LTD. (0681-06-01), 25/1, CHETLA CENTRAL ROAD, OPPOSITE CHETLA PARK, KOLKATA - 700027

BATTERY LABEL SYMBOL MEANINGS

	No smoking, no naked flames, no sparks			Battery acid
	Shield eyes			Note operating instructions
	Keep away from children			Explosive gas

Prepared by

MARUTI SUZUKI INDIA LIMITED

Service Division

July, 2026

Part No. 99011M80T07-74W

Printed in India

For 24 X 7 assistance, contact Toll Free number 1800 102 6392# / 1800 200 6392# (NEXA)

 # No STD code to be prefixed.

Service Division
MARUTI SUZUKI INDIA LIMITED
Palam Gurgaon Road, Gurgaon - 122 015 (Haryana)
www.marutisuzuki.com

99011M80T07-74W